Check for updates

NIST Special Publication
NIST SP 1333

Guidelines for Seismic Design and Evaluation of Concrete Members Retrofitted using Externally Applied FRP

PART I: FRP Jacketed Concrete Columns

Sergio Brena
Wassim Ghannoum
Insung Kim
Siamak Sattar

This publication is available free of charge from:
https://doi.org/10.6028/NIST.SP.1333

NIST NATIONAL INSTITUTE OF STANDARDS AND TECHNOLOGY
U.S. DEPARTMENT OF COMMERCE

NIST Special Publication
NIST SP 1333

Guidelines for Seismic Design and Evaluation of Concrete Members Retrofitted using Externally Applied FRP

PART I: FRP Jacketed Concrete Columns

External Authors

Sergio Brena
University of Massachusetts Amherst

Wassim Ghannoum
University of Texas at San Antonio

Insung Kim
Degenkolb Engineers

NIST Authors

Siamak Sattar
Material and Structural Systems Division
Engineering Laboratory

This publication is available free of charge from:
https://doi.org/10.6028/NIST.SP.1333

May 2025



U.S. Department of Commerce
Howard Lutnick, Secretary

National Institute of Standards and Technology
Craig Burkhardt, NIST Acting Director and Under Secretary of Commerce for Standards and Technology

NIST SP 1333
May 2025

Certain equipment, instruments, software, or materials, commercial or non-commercial, are identified in this paper in order to specify the experimental procedure adequately. Such identification does not imply recommendation or endorsement of any product or service by NIST, nor does it imply that the materials or equipment identified are necessarily the best available for the purpose. Also, it is NIST policy to employ the International System of Units (metric units) in all of its publications. However, in the North American construction and building materials industries, certain non-SI units are used, therefore measurement values using both SI and customary units are included in this publication to avoid confusion.

NIST Technical **Series Policies**
Copyright, Use, and Licensing Statements
NIST Technical Series Publication Identifier Syntax

Publication History
Approved by the NIST Editorial Review Board on 2025-04-10

How to Cite this NIST Technical Series Publication
NIST (2024) Guidelines for Seismic Design and Evaluation of Concrete Members Retrofitted using Externally Applied FRP. (National Institute of Standards and Technology, Gaithersburg, MD), NIST Special Publication (SP) NIST SP 1333. https://doi.org/10.6028/NIST.SP.1333.

Author ORCID iDs
Sergio Brena: 0000-0002-7159-7401
Wassim Ghannoum: 0000-0003-2631-7690
Insung Kim: 0009-0005-6441-4960
Siamak Sattar: 0000-0003-1096-7015

Contact Information
siamak.sattar@nist.gov

NIST SP 1333
May 2025

Abstract

This Guideline contains the design and detailing of fiber reinforced polymer (FRP) systems used to jacket concrete columns in seismic retrofit applications. Provisions to determine load-deformation parameters used for linear and nonlinear analysis of retrofitted columns are presented. Modeling parameters and acceptance criteria for concrete columns jacketed using FRP systems are provided in a format that allows their evaluation within the ASCE/SEI 41 and ACI 369.1 frameworks. The recommendations of this document are not intended to be used outside the framework of ASCE/SEI 41 and ACI 369.1. Only carbon and glass FRP systems are treated in this document.

Keywords

Fiber Reinforced Polymer (FRP); modeling parameters; performance-based design; retrofit; reinforced concrete structures; seismic design.

Table of Contents

1. Scope 1
1.1 General 1
2. FRP Material Properties 2
2.1 Mechanical properties of FRP systems 2
3. Installation and quality control of FRP systems 3
3.1 Substrate repair and surface preparation for FRP composite application 3
3.2 Installation of FRP systems 4
3.3 FRP anchor installation 4
3.3.1 FRP anchor geometric requirements 4
3.3.2 Hole preparation for FRP anchors 4
3.4 Quality Control and Quality Assurance 5
3.4.1 Acceptance of work 5
3.4.2 Dimensional tolerances 5
3.4.3 Quality control 5
3.5 Penetrations in installed FRP 5
3.6 Notification as structural element 6
3.7 Post-earthquake access for observation 6
4. General Requirements 6
4.1 Deformation Compatibility Requirements 6
4.2 Experimentally Derived Modeling Parameters and Acceptance Criteria 7
4.3 FRP Laminates 7
4.4 Environmental Considerations 8
4.4.1 Thermal Effects 8
4.4.2 Environmental Factors 8
4.4.3 Fire 8
4.5 Limitations on FRP-Retrofit Applications 9
4.5.1 FRP Flexural Strengthening 9
4.5.2 FRP Shear Strengthening 9
4.6 Retrofitted Structural System Evaluation 9
5. FRP Anchors 10

5.1 Scope 10
5.2 FRP Anchor Classification 12
5.3 Minimum Requirements 12
5.3.1 FRP anchor detailing 12
5.3.2 FRP anchor hole detailing 18
6. FRP Jacketing of Columns 19
6.1 FRP Jacket Design 19
6.1.1 General Requirements 19
6.1.2 Shear Strengthening 20
6.1.3 Section Confinement 21
6.1.4 Lap-Splice Confinement 24
6.2 Strength 25
6.2.1 Moment-Axial Strength of FRP-Jacketed Columns without Lap-splice Deficiencies after Retrofit 25
6.2.2 Moment-Axial Strength of FRP-Jacketed Columns with Lap-splice Deficiencies after Retrofit 27
6.2.3 Shear Strength of FRP-Jacketed Columns 29
6.2.4 Development of Lap-Spliced Reinforcing Steel in FRP-Jacketed Regions 30
6.3 Detailing 31
6.3.1 Scope 31
6.3.2 Discrete FRP Strips 31
6.3.3 FRP Continuous Applications 33
6.3.4 FRP anchor detailing for columns 34
6.4 Linear static and dynamic procedures 38
6.4.1 Modeling 38
6.4.2 Acceptance Criteria 38
6.5 Nonlinear static and dynamic procedures 39
6.5.1 Modeling 39
6.5.2 Acceptance Criteria 43
Appendix A. Notations and Definitions 44
7. REFERENCES 48

Example Applications 51

List of Tables

Table 6.4.2.1 —Numerical acceptance criteria for linear procedures—reinforced concrete columns jacketed using FRP systems 38
Table 6.5.1.3 —Modeling parameters and numerical acceptance criteria for nonlinear procedures: reinforced concrete columns jacketed using FRP composites 40
Table R6.5.1.3a—Range of values of nonlinear modeling parameters for concrete columns jacketed using FRP 42
Table R6.5.1.3b—Multipliers for concrete column modeling parameters to achieve specific probabilities of exceedance 42

List of Figures

Figure R5.1: Illustration of FRP anchors 11
Figure R5.3.1: FRP anchor detailing 13
Figure R5.3.1.5: FRP anchor layout with respect to anchored composite 14
Figure R5.3.1.12: illustration of anchor patches 17
Figure R6.1.3.4: Confinement continuity through structural obstructions 22
Figure R6.2.4.1.1: FRP jacketing of lap-spliced bars in hinging regions of columns 31
Figure R6.3.2: Details of FRP Laminates Installed throughout Column Height 33
Figure R6.3.4.2.2.4: FRP anchors strengthening lap splices example 36
Figure R6.5.1.3: Section details 41

Preface

In 2018, NIST hosted a national workshop to identify research needs concerning the performance of fiber reinforced composite retrofit systems for buildings and infrastructure (the outcomes of this workshop are discussed in NIST publication: SP-1244). The workshop identified the development of design guidelines and standards as the highest priority research and implementation need for FRP.

In response to this high priority research and implementation need, NIST convened a working group in 2021 to develop Guidelines for the design of FRP retrofitting systems for jacketing of seismically deficient reinforced concrete columns. The development of retrofitting Guidelines for reinforced concrete columns was considered as a first step in the research and implementation effort. The working group included the main authors of this report and a group of expert reviewers who provided input that helped improve the report.

Standards in the U.S. are typically developed through a consensus-based process by Standard Developing Organizations (SDO). This document can serve as a resource for relevant standard committees (such as ACI 369 and ASCE 41) as they develop the FRP seismic design chapter of the standards for seismic evaluation and retrofit. These Guidelines are written in mandatory language to streamline their potential consideration by relevant standard committees. This document does not currently serve as a standard for seismic design of FRP retrofit systems, but can be useful for future development efforts by the relevant SDO.

Acknowledgments

The authors gratefully acknowledge the following individuals who carefully reviewed this document: Scott Arnold, Aniket Borwankar, Ioannis Koutromanos, Brian Kehoe, Bill Tremayne, Ravi Kanitkar. The detailed comments provided by the reviewers greatly improved the document.

1. Scope

1.1 General

1.1.1 This document provides requirements for the design and installation of externally bonded jackets made of Carbon FRP (CFRP) and Glass FRP (GFRP) composite systems for seismic retrofit. Provisions of this document only apply to wet-layup FRP jacketing applications with FRP fibers oriented transversely to the column longitudinal axis.

R1.1.1 This document only provides the design requirements for CFRP and GFRP jacketing systems due to limited experimental data for other materials such as Aramid or Basalt FRP (AFRP or BFRP).

1.1.2 Other FRP composite materials shall be permitted if demonstrated to provide the target seismic performance through experiments satisfying 4.2.

R1.1.2 This document does not prohibit the use of other materials if adequate experimental data in accordance with 4.2 are available.

1.1.3 This document shall apply to design and detailing of FRP jackets for reinforced concrete columns of rectangular and circular cross-sections with the largest dimension not exceeding 48 in. [1219 mm].

R1.1.3 Limited data exist for jacketed columns with cross-section dimensions exceeding 48 in. [1219 mm].

1.1.4 This document shall apply to shear strengthening, lap-splice confinement, and section confinement for existing concrete columns using FRP jackets.

R1.1.4 This document does not provide design requirements for flexural strengthening of concrete columns using FRP systems. See 4.5.1 for limitations if FRP is used for flexural strengthening with fibers oriented along the column longitudinal axis.

1.1.5 This document shall not apply to columns that contact infills or are expected to contact infills based on analyses.

2. FRP Material Properties

2.1 Mechanical properties of FRP systems

Mechanical properties of FRP laminates and their constituent materials shall be in conformance with ACI 440.2 and ACI 440.8 for wet layup systems, unless otherwise noted in this document. The requirements of this document shall take precedence over the requirements of ACI 440.2 and ACI 440.8 for seismic retrofit applications.

R2.1 ACI 440.2 and ACI 440.8 specify procedures to determine the mechanical properties of FRP systems and constituent materials, such as the ultimate tensile strength, f_{fu}^*, ultimate rupture strain, ε_{fu}^*, and modulus of elasticity, E_f.

2.2 The tensile stress-strain relationship of FRP laminates shall be assumed as linear-elastic until rupture of the FRP material or debonding from the concrete surface.

2.2.1 Mechanical properties of FRP laminates shall be based on the composite properties and gross laminate area.

R2.2.1 This document is based on gross-area laminate properties. The use of net-fiber properties is not supported by the document.

2.3 Interlaminar bond strength (B_{IL}) shall be as specified by the manufacturer in accordance with ASTM D7616/D7616 M by taking the mean minus three standard deviations of at least 20 test results.

2.4 Bond strength between FRP anchor fan and FRP laminates (B_{CL}), shall be as specified by the manufacturer. It shall be permitted to take B_{CL} as 525 psi [3.62 MPa].

R2.4 ACI 440.2 specifies anchor fan lengths based on a lower bound-value of B_{CL} as 700 psi [4.82 MPa] from test data [1-4]. A factor of 0.75 is applied to that value for seismic applications to arrive at 525 psi [3.62 MPa].

2.5 FRP systems shall meet the durability and resistance to environmental exposure requirements of ACI 440.2

2.6 FRP system design properties shall be modified considering exposure conditions as required in 4.4.

2.7 Time-dependent FRP material properties and other physical properties shall be in accordance with ACI 440.2.

2.8 Protective coating over FRP systems shall be provided as required in accordance with ACI 440.2.

3. Installation and quality control of FRP systems

Installation of FRP systems shall satisfy provisions of ACI 440.2 and ACI 440.12 for wet layup applications unless otherwise noted in this section, and shall follow procedures specified by the manufacturer of the FRP composite system. Requirements in this section shall take precedence over ACI 440.2 and ACI 440.12 for seismic applications.

R3 ACI 440.2 and ACI 440.12 provide guidance on surface preparation requirements prior to installation of FRP systems, permissible environmental conditions within which FRP systems should be installed, installation procedures, and quality assurance testing for work acceptance.

3.1 Substrate repair and surface preparation for FRP composite application

Prior to FRP system installation, the concrete substrate and surface shall be repaired and prepared in accordance with ACI 440.2 and ACI 440.12.

3.1.1 Concrete edges and corners shall be rounded to a minimum radius, R_{edge}, of 0.75 in. [19 mm].

R3.1.1 To improve the lateral deformation capacity of a column, a 2 in. [51 mm] corner radius has been shown to improve confinement [5] and has been practically implemented in seismic retrofit projects. Because the effect of corner radius is explicitly considered in the calculation of deformation capacity for column jacketing in 6.4 and 6.5, only a 0.75 in. [19 mm] minimum radius is required in 3.1.2. However, a 2 in. [51 mm] radius is recommended for columns expected to sustain relatively large deformation or ductility demands. A practical upper limit for R_{edge} of 2.5 in. [63.5 mm] should be considered to minimize the risk of exposing reinforcing bars at column edges.

3.2 Installation of FRP systems

Installation procedures for FRP systems shall comply with Section 6.6 in ACI 440.2 and ACI 440.12 for bond-critical and contact-critical applications unless stated otherwise in this document or in the construction documents. Application shall be consistent with the type of FRP laminate used and shall follow manufacturer specified procedures.

3.3 FRP anchor installation

FRP anchors shall be prepared prior to installation and inserted in accordance with manufacturer specified procedures into pre-drilled holes satisfying 3.3.2.

R3.3 FRP anchor fibers are inserted into resin-filled substrate holes either as loose fiber bundles or as precured dowel ends. Fibers extending out of the hole are fanned or splayed onto the FRP laminate. Full saturation of the anchor fibers should be ensured following manufacturer specified procedures.

3.3.1 FRP anchor geometric requirements

The embedment depth of anchor fibers and the geometry of fibers that extend out from the holes in the concrete shall be specified in the construction documents.

R3.3.1 FRP anchors can transfer forces in the plane of the FRP laminate they anchor as described in 6.3.4.1 or out-of-plane where anchors are used in FRP confinement or FRP lap-splice retrofit applications as described in 6.3.4.2. FRP anchor detailing and design requirements are provided in 5. Anchors resist in-plane forces between FRP laminates and the concrete surface through a combination of bond stresses between anchor and concrete, bearing between concrete and the anchor shaft, and inter-laminate stresses generated between the anchor splay and the FRP laminate. Fibers that extend outside of the concrete holes should be splayed in the direction of tensile forces generated by the FRP laminate they anchor. For cases involving multi-directional forces, anchor splays scan be flared in opposite directions parallel to the direction of applied force. The geometry of the splay and insertion depth of anchors should be included in the design drawings and should be consistent with manufacturer specified procedures.

3.3.2 Hole preparation for FRP anchors

Holes drilled into the substrate for FRP anchor holes shall be prepared in accordance with (a) through (c):

(a) Holes shall be drilled to the diameter, depth, and inclination from the concrete surface specified in the construction documents.

(b) Anchor-hole edge shall be chamfered to the radius specified in the construction documents.

(c) Holes shall be drilled and cleaned in accordance with manufacturer specified procedures.

3.4 Quality Control and Quality Assurance

3.4.1 Acceptance of work

Acceptance of work for wet layup laminate applications shall be in accordance with ACI 440.2 and ACI 440.12.

3.4.2 Dimensional tolerances

Dimensional tolerances for wet layup applications shall be in accordance with ACI 440.12.

3.4.3 Quality control

The quality of the installation and material shall be verified by pull-off tests per ASTM D7522 and coupon testing per D7565 in accordance with ACI 440.12

3.4.3.1 Sampling locations and number of samples shall be specified in the construction documents.

R3.4.3 ASTM D7522 tensile pull-off strength test and ASTM D7565 tensile coupon test of the installed FRP composite provide the quality measure for the workmanship and the conformance of material properties. The pull off strength test should be conducted in the region of FRP composite where it does not affect the structural performance and should be repaired if it is required by the construction documents.

3.5 Penetrations in installed FRP

Penetrations made to the FRP system and the penetration method shall be evaluated by the Licensed Design Professional (LDP) before the execution of the penetrations. Alternatively, limits to the number and size of penetrations and the penetration method shall be specified in the construction documents.

R3.5 In many cases, it is impractical to prohibit penetrations from being made on the FRP system after installation. Penetrations are frequently needed to attach framing elements or to anchor supports for nonstructural components. The strength of FRP composites can be significantly compromised if a large number of fibers are interrupted by the presence of protruding elements, such as power-driven fasteners or bolts that are post-installed onto the structural member. In addition, the penetration method, (e.g., powder actuated penetration or hammer or core drilling) may affect the performance of the composite. The maximum permitted amount of fiber

interruption should be evaluated by the LDP when there is concern for the load carrying capacity of the FRP system. In such cases, a local strengthening technique applied to the FRP composite could be needed to provide force transfer around discontinuities created by penetrations.

3.6 Notification as structural element

Signage or documentation shall be provided on the FRP installation indicating that the FRP materials are part of the structural element and shall not be modified without evaluation of an LDP.

R3.6 FRP materials with finish may not be recognized as a structural component. A sign or documentation is required to prevent unintended damage during future construction projects.

3.7 Post-earthquake access for observation

Provisions shall be made to allow access to observe selected retrofitted members after potentially damaging events. The number and location of inspection locations shall be determined by the LDP and clearly indicated in the construction documents.

R3.7 Retrofitted components need to be periodically inspected, particularly after large earthquake events, to verify the integrity of the retrofit materials and to detect the occurrence of damage to the retrofitted component. Facilitating access for inspection by designing removable non-structural covers to permit visual inspection should be planned as part of the retrofitting scheme. The LDP should select critical elements of the lateral-load system and indicate the location where inspection should be performed after a potentially damaging earthquake event. Inspection locations may include critical sections of the main components of the lateral-load system.

4. General Requirements

4.1 Deformation Compatibility Requirements

Compatibility of deformations shall be considered between contacting retrofit materials and existing materials.

R4.1 Kinematically compatible deformations should be considered when calculating the contributions to strength of new and existing materials. In bond-critical applications, compatibility of strains can be assumed to be maintained between materials up to debonding strains, which typically occur at local strains across cracks that are significantly lower than the rupture strain of FRP [2-4, 6]. In applications where bond is not designed to be maintained such as contact-critical applications, or where bond may deteriorate during loading, elongation of the FRP materials between anchorage points should be considered [7]. Anchorage points are considered where FRP anchors are installed or where FRP remains attached to the concrete substrate, such as member corners. If the elongation between anchorage points concentrates in

a limited number of cracks, typically where steel reinforcement ratios are relatively low, crack widths can compromise transfer of forces across the cracks [7]. Placement of FRP anchorage at a closer spacing is recommended in such cases.

4.2 Experimentally Derived Modeling Parameters and Acceptance Criteria

Modeling parameters and acceptance criteria for actions in FRP-retrofitted components not specifically addressed in this document or as alternatives to those provided in this document, shall be derived using experimentally obtained response characteristics of subassembly tests designed and tested in accordance with 7.6 of ASCE/SEI 41.

R4.2 ASCE/SEI 41 Section 7.6 provides requirements for deriving modeling parameters and acceptance criteria using tests on subassemblies. Section 7.6.1 of ASCE/SEI 41 provides test requirements for deriving general use parameters where experimental datasets are mined. Section 7.6.2 of ASCE/SEI 41 provides test requirements for deriving project-specific parameters using representative peer-reviewed testing. Sections 7.6.3, 7.6.4, and 7.6.5 of ASCE/SEI 41 detail procedures for extracting modeling parameters and acceptance criteria from test data.

Durability of new materials and their connection to existing materials should be considered in deriving modeling parameters and acceptance criteria for component actions.

4.3 FRP Laminates

4.3.1 The effect of the total thickness of the FRP system on force transfer to existing materials and constructability shall be considered.

R4.3.1 A practical limit to the thickness of FRP laminates is 0.3 in. [7.5 mm], regardless of the number of FRP plies applied. This limit is based on constructability considerations. In addition, limited test data are available for members strengthened using FRP laminates with a thickness exceeding 0.3 in. [7.5 mm]. The thickness of FRP anchor splay and reinforcing patches is not included in this limit.

4.3.2 FRP composites shall only be considered to resist tensile forces parallel to the fiber direction. FRP composites shall not be considered effective in resisting in-plane compressive forces.

R4.3.2 FRP composites are not effective in resisting compressive forces and can only resist tensile forces in the direction of their fibers. In composites with bi-directional fibers, tensile forces can be resisted in both fiber directions.

4.3.3 For the use of modeling parameters and acceptance criteria in this document, FRP applications shall be classified as bond-critical unless noted otherwise.

R4.3.3 Bond-critical application allows strain compatibility between new materials and existing materials until debonding, which improves crack control and limits deflections [8-10].

4.4 Environmental Considerations

4.4.1 Thermal Effects

The effects of thermal expansion and contraction on new retrofit materials, existing materials and the interfaces between them shall be considered in retrofit design.

R4.4.1 Retrofit materials may have differing thermal expansion coefficients than those of concrete and steel materials. Carbon FRP can have a positive thermal coefficient transverse to fibers and negative in the direction of fibers (ACI 440.8, ACI 440.2). Compatibility of deformations at expected temperature extremes should be considered to evaluate thermal stress introduced in the materials and the interface between them.

4.4.2 Environmental Factors

The effects of environmental conditions on FRP material properties and performance shall be considered.

R4.4.2 Guidance on how to treat environmental effects for design of externally applied FRP systems are provided in ACI 440.2.

4.4.3 Fire

4.4.3.1 Simultaneous seismic and fire loading in structures retrofitted using FRP need not be considered.

R4.4.3.1 Fire following an earthquake could affect the behavior of retrofitted components to resist aftershocks. The simultaneous occurrence of fire and seismic loading is unlikely and, therefore, not included.

4.5 Limitations on FRP-Retrofit Applications

4.5.1 FRP Flexural Strengthening

4.5.1.1 For components strengthened in flexure using FRP laminates as longitudinal reinforcement, moment and axial force determined throughout the strengthened region shall be considered critical force-controlled actions in accordance with ASCE/SEI 41 section 7.5.3.2.3.

R4.5.1.1 Using FRP laminates with fibers oriented in the axial direction can increase the moment strength of existing components. Due to the brittle behavior of FRP systems, the moment strength of the strengthened section can no longer be considered a deformation controlled action. Also, higher moment strength will generate higher shear demands that would need to be addressed as indicated in 6.1.2. For these reasons, flexural strengthening of existing columns is not usually recommended and is not treated in this document, but if it is conducted, the increased shear demands on the strengthened column should be evaluated. Increasing the moment strength of columns might be needed to achieve a strong-column weak-beam mechanism. Sudden detachment of retrofitting materials should be avoided.

4.5.1.2 If yielding of longitudinal steel reinforcement is expected outside of flexurally strengthened regions, unretrofitted regions shall be evaluated to ensure that they meet the specified performance objective per ASCE/SEI 41 and ACI 369.1.

4.5.2 FRP Shear Strengthening

4.5.2.1 For components strengthened in shear using FRP laminates as shear reinforcement, shear at the location of strengthening shall be considered a critical force-controlled action in accordance with ASCE/SEI 41 section 7.5.3.2.3.

4.6 Retrofitted Structural System Evaluation

4.6.1 Retrofitted structures shall be assessed per ASCE/SEI 41 and this document, including the effects of the retrofits on component and system behaviors.

R4.6.1 Retrofitted structural systems should be re-analyzed to obtain updated demands accounting for the effects of retrofits on retrofitted and non-retrofitted components. When retrofitting an action or location in a component, other actions and locations of the component should be verified to have sufficient strength and/or deformation capacities to accommodate post-retrofit demands.

5. FRP Anchors

5.1 Scope

Anchorage of FRP laminates shall be with FRP anchors detailed and designed in accordance with 5.2 through 5.3. Alternative anchorage materials and methods shall be permitted based on testing that demonstrates anchorage effectiveness per 4.2.

R5.1 This document only treats anchors made of FRP materials. FRP anchors consist of a bundle of FRP fibers with one end embedded in a hole drilled in the concrete substrate and the fibers in the other end having a splayed configuration, spliced in contact with the FRP being anchored (Figure R5.1). Depending on the orientation of the FRP being anchored, anchor fibers extending outside the hole could approximately follow the hole direction or be bent to an angle θ_{anc} at the hole edge to align with the surface on which the FRP being anchored is installed. For FRP anchors embedded in a direction approximately perpendicular to the laminate they develop (θ_{anc} = 90 ° [degrees]), anchorage forces are resisted by a combination of bearing of the anchors on the sides of the hole and tension transferred by bond between the concrete and the anchor in the hole, as well as through bond between the anchor splay and the FRP laminates they develop and the concrete outside the hole. Anchors with bend angles closer to 180 ° are primarily used to anchor FRP placed on surfaces parallel to the hole direction. In these cases, FRP anchors primarily resist direct tension, which is transferred to the concrete by bond forces at the interface of the anchor in the hole and concrete, as well as between the anchor splay and FRP laminates and the concrete outside the hole.

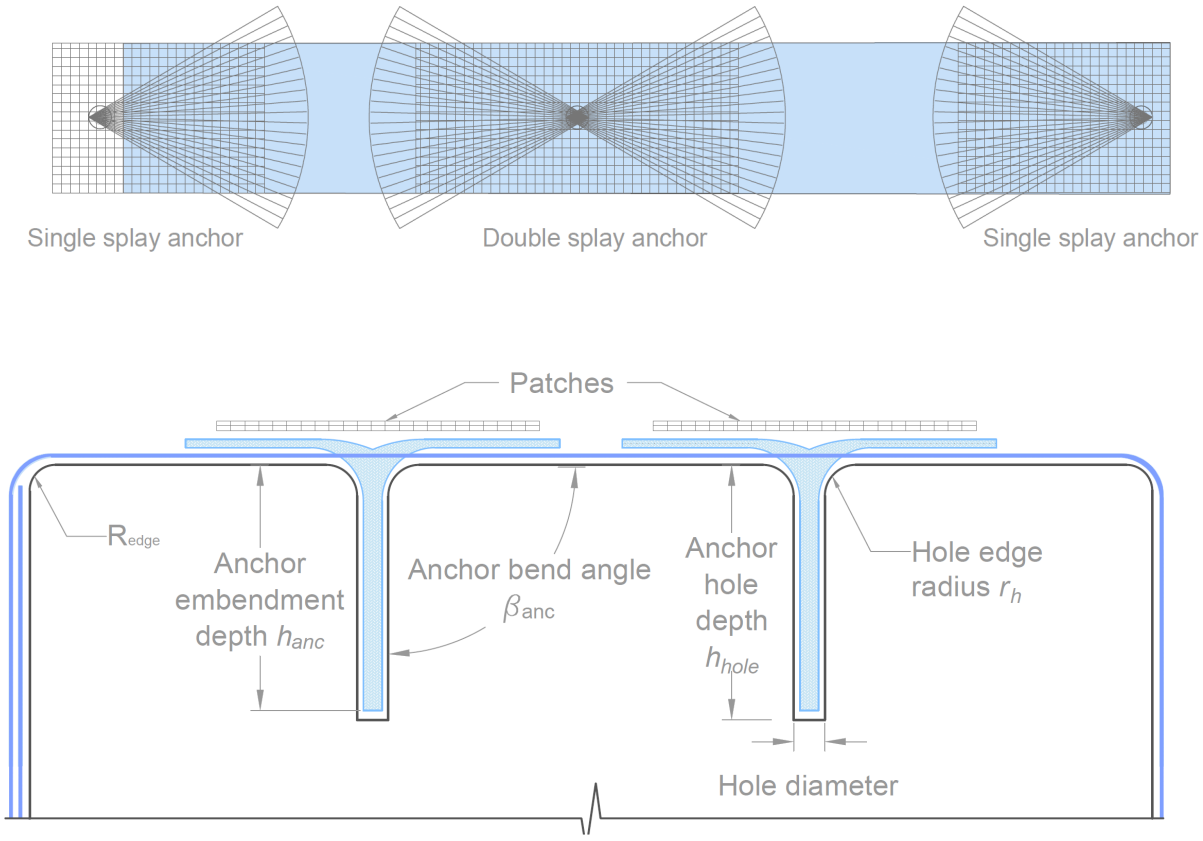

Figure R5.1: Illustration of FRP anchors

FRP anchors can have a single splay on one side oriented in the direction of the anchored FRP, or splays on each side oriented in the direction of the FRP but in opposite directions single-splay anchors resist tension force only in the splay direction, while double-splay anchors can resist tension in two opposing directions. FRP anchors can also have splay fibers oriented radially in all directions around the anchor hole.

5.2 FRP Anchor Classification

FRP anchors shall be classified as in-plane anchors resisting forces primarily in the plane of the anchored FRP laminate or out-of-plane anchors resisting forces in the plane of the anchored FRP laminate as well as out of that plane.

R5.2 – In-plane anchors are primarily intended to resist tensile forces in the plane of the FRP they are anchoring. Out-of-plane anchors resist forces acting normal to the FRP they anchor, as well as in-plane forces. In shear, flexure, and direct tension strengthening applications, FRP anchors are primarily used to develop tensile stresses in the plane of the FRP. In confinement applications, out-of-plane anchors resist both in-plane and out-of-plane actions. Design criteria and objectives differ for each type of anchor.

5.3 Minimum Requirements

5.3.1 FRP anchor detailing

R5.3.1 FRP anchor details and illustration of anchor dimensional parameters are provided in Figure R5.3.1.

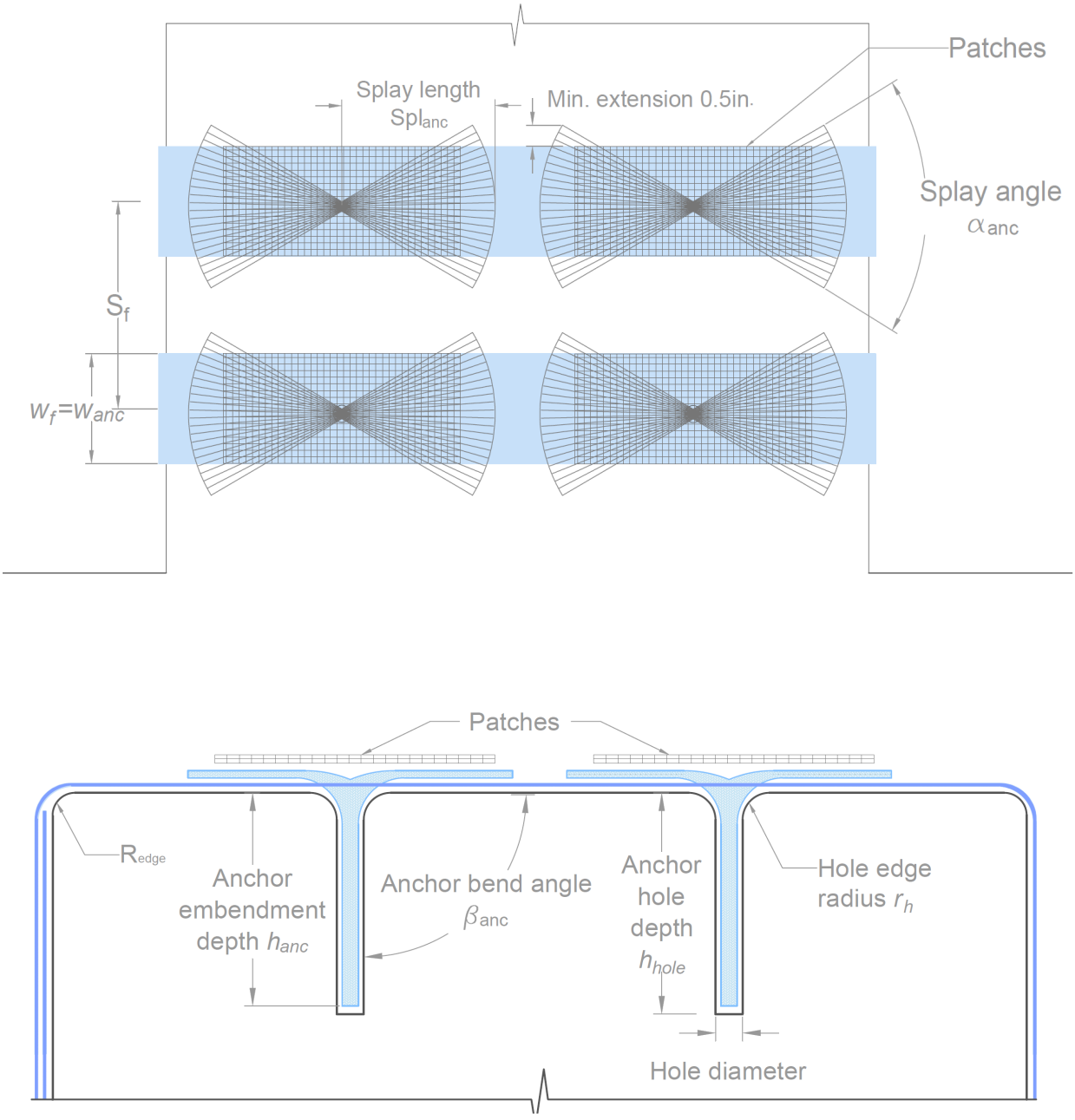

Figure R5.3.1: FRP anchor detailing

5.3.1.1 FRP anchors shall be made with the same fibers and resin as the FRP composite they anchor.

R5.3.1.1 FRP anchors should be installed at the time of installation of the FRP to ensure that the resin in the anchor splays and the FRP cure simultaneously.

5.3.1.2 The dry fiber weight for a unit length of anchor λ_{anc} shall satisfy:

$$\lambda_{anc} \geq \frac{A_{anc}\gamma_{comp}}{t_f} \qquad \text{Eq. 5.3.1.2}$$

R5.3.1.2 For anchors to develop target strains in FRP, they must contain a sufficient cross-sectional area of fibers based on the cross-sectional area of fibers in the FRP they develop (Pudleiner, 2019, Sun, 2016, Shekarchi, 2018, Shekarchi 2020). Anchor total cross-sectional area including resin area is not a true measure of the anchor strength as it can be defined differently by different manufacturers. This clause enforces the target fiber area in anchors based on the anchor cross-section area (A_{anc}), assuming the ratio of resin-to-fibers is the same in anchor and laminate.

5.3.1.3 The width of FRP laminate anchored by a single FRP anchor, w_{anc}, shall not exceed 10 in. [254 mm].

5.3.1.4 The area of FRP anchors, A_{anc}, shall not exceed 1.2 in.^{2} [774 mm^2]. Alternatively, anchors that exceed this limit shall be permitted to be based on testing that demonstrates anchorage effectiveness per 4.2.

R5.3.1.4 - The effectiveness of fiber anchors diminishes with increasing anchor cross-sectional area and increasing width of laminate anchored by an individual anchor [1, 2, 11, 12]. Pudleiner et al. (2019) demonstrated that a single anchor can develop the fracture strength of a 10 in. [254 mm] wide CFRP laminate up to 0.04 in. [1 mm] thick under monotonically increasing tensile forces. The limit on anchor area is based on the largest CFRP anchor successfully used in the study.

5.3.1.5 FRP anchors shall be installed with the nearest edge of the anchor hole not farther than 1 in. [25 mm] from the end of the anchored FRP in the direction of fibers.

R5.3.1.5 FRP anchors have been shown to effectively develop the fracture strength of FRP when they are inserted in holes that overlap with the FRP they anchor, or positioned not farther than 1 in. [25 mm] from the end of the FRP ([1, 8, 9, 13]) (Figure R5.3.1.5).

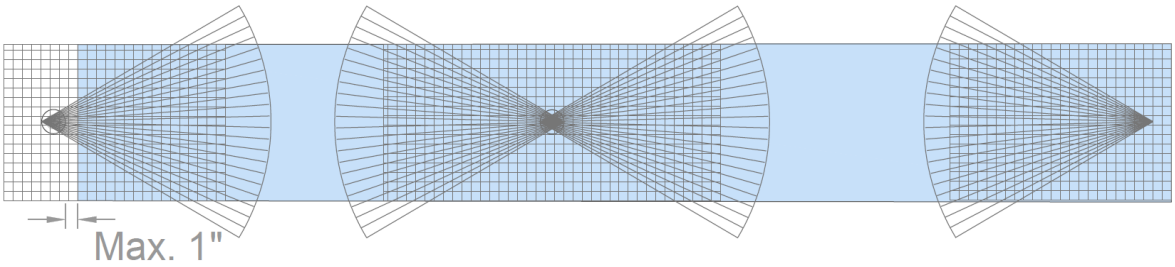

Figure R5.3.1.5: FRP anchor layout with respect to anchored composite

5.3.1.6 FRP anchor holes shall not be placed less than anchor embedment depth h_{anc} from an edge of concrete, measured normal to the anchor-hole axis.

R5.3.1.6 A minimum edge distance is required to prevent breakout failure of concrete.

5.3.1.7 FRP anchor splay angle, α_{anc}, shall not exceed 60 ° for in-plane anchors and 90 ° for out-of-plane anchors.

R5.3.1.7 Several tests indicated that smaller fan angles produce a more effective transfer of forces to the anchor [1, 2, 14, 15]. These studies recommend that the anchor fan angle not exceed 60 ° for anchors under in-plane actions to limit the loss of anchor performance due to the increased amount of ineffective laminate fibers at anchor-fan edges. A 90 ° splay angle was found to be adequate for anchors under out-of-plane actions [5].

5.3.1.8 FRP anchor splay shall extend at least 0.5 in. [12.7 mm] in each direction past the width w_{anc}.

R5.3.1.9 FRP anchors have been shown to distribute stresses in the FRP they anchor more effectively when they are splayed 0.5 in. [12.7 mm] past w_{anc} in each direction [1, 2, 13].

5.3.1.9 Anchor fibers shall be splayed in equal amounts in opposite directions in double-splay anchors

5.3.1.10 FRP anchor splay length Spl_{anc} shall satisfy a) or b) as applicable:

a) For in-plane actions, FRP anchor splay length Spl_{anc} shall satisfy Eq. 5.3.1.10

$$Spl_{anc} \geq \frac{N_b t_f f_{fu}^*}{B_{CL}} \frac{\varepsilon_{fe}}{\varepsilon_{fuL}} \qquad \text{Eq. 5.3.1.10}$$

b) For out-of-plane actions, FRP anchors splay length shall not be less than 0.5 S_{Ancl} in the direction of laminate fibers and 0.5 S_{Anct} in the direction transverse to laminate fibers for radially splayed fans.

R5.3.1.10 Debonding failure between anchor splay and the laminate being developed can occur if the bond strength at the interface between anchor splay and laminate is exceeded [1, 2]. In cases where the anchors splay on top of all the laminate layers, only one interface is available to transfer stresses (N_b=N). The splay of an anchor can however be placed in between layers of anchored laminates to produce two interfaces transferring tensile stresses (N_b=N/2). An example of the FRP anchors for out-of-plane actions is shown in Figure R6.3.4.2.2.4. [5]) used FRP anchors with evenly distributed radial splays to confine splices. Double splay anchors with fibers oriented along FRP laminate fibers can also be used for out-of-plane actions.

5.3.1.11 It shall not be permitted to have Spl_{anc} larger than S_{Ancl} in the direction of laminate fibers or S_{Anct} in the direction transverse to laminate fibers.

R5.3.1.11 Overlapping an anchor splay with an adjacent anchor hole is not permitted. Anchor detailing should be adjusted if this condition arises.

5.3.1.12 FRP composite patches satisfying (a) through (f) shall be applied over all FRP anchor splays.

(a) Two FRP patches shall be applied over FRP anchors unless the anchor splay is placed in between layers of the anchored FRP laminate, in which case, only one patch is necessary with fibers oriented perpendicular to laminate fibers.
(b) Where two patches are required, one patch shall have fibers oriented perpendicular to the anchored laminate fibers and the second patch shall have fibers oriented parallel to the anchored laminate fibers.
(c) Patches shall be made of the same fibers and resin materials as FRP anchors.
(d) Patches shall extend at least the width $w_{anc.}$
(e) Patches shall extend at least 2/3 the length of each splay (Spl_{anc}) in the direction of the anchored laminate fibers.
(f) Patches shall extend at least 1.5 in. [38.1 mm] past the anchor hole edge in all directions.
(g) Patches shall be applied while the anchor and the FRP are still wet.

R5.3.1.12 FRP patches with fibers oriented parallel and perpendicular to the anchorage direction help distribute stresses at the anchor hole ([1, 2, 16]). By minimizing stress concentrations around the anchor bend and in the splay region, anchor patches increase the stress capacity of an anchor [1].

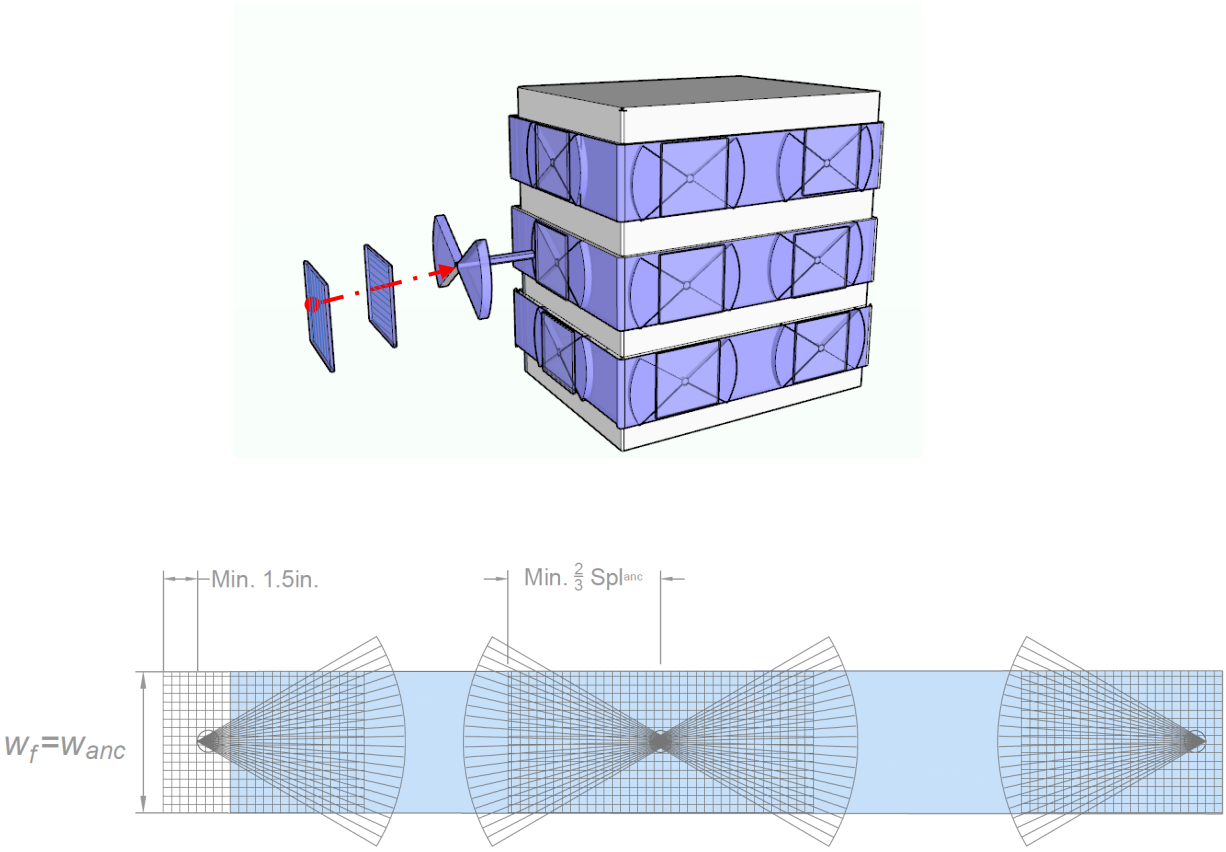

Figure R5.3.1.12: illustration of anchor patches

5.3.1.13 FRP anchor embedment depth into the concrete substrate, h_{anc}, shall not be less than specified in ACI 440S Table 8.7.

5.3.1.14 In regions where inelastic material response is determined from analysis, FRP anchor embedment depth, h_{anc}, shall be: (i) at least larger of 6 in. [152 mm] and $7A_{anc}^{0.5}$ past the clear cover to steel reinforcement, and (ii) at least $2/3c_{yE}$ from the concrete surface.

R5.3.1.14 In hinge regions and where inelastic material response is anticipated, bond between the embedded anchor and the concrete substrate may become compromised. Embedding anchors at least 6 in. [152 mm] past transverse reinforcement into the concrete is intended to prevent anchor pullout and provide effective confinement [5]. In members where a relatively large compression block occurs due to combined flexure and axial actions, concrete damage may extend past the 6 in. anchor embedment criteria. Longer embedment depths may be necessary where concrete damage has the potential of extending past requirements in this clause.

5.3.1.15 FRP anchors crossing the full thickness of a component with splays on opposite component faces shall be permitted in all cases.

R5.3.1.15 Where member thickness does not allow embedment depths per 5.3.1.13 or 5.3.1.14, continuous anchors running through member thickness and splayed at both faces of a member are permitted. In hinge regions where high levels of confinement are needed and where damage of the concrete substrate is anticipated, through-thickness anchors are recommended.

5.3.1.16 FRP anchors developing the in-plane design tensile strain ε_{fe} of FRP composites shall have spacing s_{Ancl} in the direction of anchored laminate fibers in accordance with Eq.5.3.1.16.

$$s_{Ancl} \leq \frac{0.18}{\varepsilon_{fe}} \; and \; 48 \; in. \; \textit{(psi units)} \qquad \text{Eq. 5.3.1.16}$$

$$s_{Ancl} \leq \frac{4.6}{\varepsilon_{fe}} \; and \; 1219 \; mm \; \textit{(MPa units)}$$

R5.3.1.16 The design tensile strain in anchored composites, ε_{fe}, represents the average strain that is expected to develop across FRP strips sharing load. The actual strain in FRP strips sharing load can be as much as twice the design strain due to uneven strain distributions across concrete cracks, particularly in shear strengthening applications [1, 2, 13]. Where anchors are used to increase the strain capacity of composites, concrete cracking can delaminate the FRP composites between anchorage points, resulting in an elongation between anchorage points as high as $2\varepsilon_{fe}s_{Ancl}$ [8]. In regions with relatively low steel reinforcement ratios, that elongation can concentrate in a single crack. The limit on the spacing between anchorage points is intended to limit crack width to 3/8 the maximum aggregate size [7, 9], which is assumed to be 1 in. [25 mm].

5.3.2 FRP anchor hole detailing

5.3.2.1 Anchor hole diameter, d_h, shall be not less than 1/8 in. [3.2 mm] or more than 3/8 in. [9.5 mm] larger than the gross composite anchor diameter, d_{anc}.

R5.3.2.1 An anchor hole area equal to 1.4 times the anchor cross-sectional composite area is recommended by [17, 18]. Hole diameter requirements are adopted from ACI 440.2. The lower requirement is intended to facilitate insertion of anchor materials. The upper limit is intended to facilitate saturating the hole with resin and avoid weakening bond with the substrate.

5.3.2.2 Anchor-hole edge shall be chamfered to a minimum radius r_h per Eq. 5.3.2.2 at locations of splays.

$$r_h = 0.7d_h \geq 0.5in. \; \textit{[12.7 mm]} \qquad \text{Eq. 5.3.2.2}$$

R5.3.2.2 Sharp bends in FRP reduce the tensile stress capacity of FRP materials [1, 19]. As anchor cross-section increases, the chamfer radius at the edge of the anchor hole needs to increase to reduce stress concentration at anchor bend and maintain anchor tensile stress capacity [1, 18].

6. FRP Jacketing of Columns

6.1 FRP Jacket Design

6.1.1 General Requirements

FRP jacket design for columns shall satisfy 6.1.2 for shear strengthening, 6.1.3 for section confinement, and 6.1.4 for lap-splice strengthening, as well as detailing requirements in 6.3. Where FRP jackets are used in column sections to simultaneously increase the shear strength, increase concrete confinement, and/or increase lap-splice confinement, it shall be permitted to design the FRP jacket considering each action independently.

R6.1.1 Modeling parameters in 6.5.1.3 and acceptance criteria in 6.4.2 and 6.5.2 were derived based on the jacket design criteria in this section. The largest thickness of FRP jacket that results from effects of column shear, confinement, and/or lap-splice confinement should be provided in corresponding regions along the column, that is, the effects of shear, confinement, and/or lap-splice clamping should not be considered as an additive for the design of FRP jackets.

This section does not treat flexural strengthening using FRP laminates as tensile reinforcement *oriented along the column longitudinal axis.*

6.1.1.1 Actions of reinforced concrete columns retrofitted with FRP Laminates

6.1.1.1.1 Shear force in a column retrofitted in shear with FRP systems shall be considered a critical force-controlled action.

6.1.1.1.2 Where FRP systems are used to retrofit combined axial force and moment actions by confinement per 6.1.3, or shear actions per 6.1.2, shall be permitted to be considered a deformation-controlled actions.

R6.1.1.1.2 Combined axial and moment action is permitted to be considered deformation-controlled where FRP laminate fibers are oriented transverse to the column axis for confinement or shear strengthening. Deformation-controlled designation is permitted even when moment capacity is controlled by the inadequate development or splice length of longitudinal bars; however, the modeling parameters and acceptance criteria in 6.4 and 6.5 for jacketed columns cannot be used if splice deficiency in not addressed per 6.1.4.

6.1.1.1.3 Combined axial and moment action in a column strengthened in flexure with FRP laminates as longitudinal reinforcement shall be considered a critical force-controlled action.

6.1.2 Shear Strengthening

6.1.2.1 Shear strength shall be calculated in accordance with 6.2.3.

6.1.2.2 Shear strength along column length shall not be less than the shear force to develop the peak expected moment strength of the column retrofitted with FRP systems calculated according to 6.2.1.2 or 6.2.2.3, as applicable.

R6.1.2.2 FRP systems should be designed so that the shear strength of the retrofitted component exceeds the shear force associated with the largest expected moment strength of the column, considering axial force and confinement effects. This requirement is intended to prevent brittle shear failure after retrofitting.

6.1.2.3 The interaction of shear forces acting along orthogonal axes shall be considered in accordance with Section 22.5 of the ACI 318.

6.1.2.4 FRP laminates used for shear strengthening of columns shall completely wrap around the column section. FRP laminate ends shall be lapped in accordance with 6.3.2 or 6.3.3, as applicable.

R6.1.2.4 The ends of FRP wrapping around column sections should be lapped a sufficient length to prevent premature delamination. Short lap lengths may result in interlaminar debonding failure prior to developing the design strength of the FRP laminates. Where FRP laminates cannot completely wrap around a column section, FRP anchors shall provide a continuous load path for FRP tension forces around the column section. FRP anchors shall be designed to develop the ε_{fe} strain indicated in 6.2.3 at the face of the obstruction in accordance with 6.3.4.1. For such cases, shear strength shall be permitted to be calculated in accordance with 6.2.3.

In cases where complete wrapping of a column section is not possible, such as cases where walls frame into columns, continuity in FRP tension forces should be developed by using FRP anchors. Typically, holes are drilled through the obstructing element so that FRP anchors can be inserted to provide a continuous load path. The FRP anchors should be splayed on both sides of the obstruction and bonded adequately to the FRP composite wrapping the column. Such anchors are classified as resisting in-plane actions and should be designed in accordance with 6.3.4.1.

6.1.2.5 Three or two-sided applications of FRP laminates with or without FRP anchors shall be permitted if their effectiveness is justified by experimental validation in accordance with 4.2.

R6.1.2.5 In some cases, FRP laminates for shear strengthening can only be applied to two or three faces of the concrete component. In these cases, FRP anchors should be used to allow the FRP laminate to develop its design strain.

6.1.3 Section Confinement

6.1.3.1 Effective yield and peak moments of FRP-jacketed columns shall be calculated in accordance with 6.2.1 for cases without lap-splice deficiencies or 6.2.2 for cases with lap-splice deficiencies.

6.1.3.2 The interaction of axial force and moment acting along orthogonal axes shall be considered in accordance with Section 3.3 in ACI 369.1.

6.1.3.3 FRP laminates used for confinement shall completely wrap around the column section unless 6.1.3.4 is satisfied. FRP ends shall be lapped in accordance with 6.3.2 or 6.3.3, as applicable.

R6.1.3.3 A continuous force path around the column is needed to effectively confine the concrete section.

6.1.3.4 Where elements of the lateral load system prevent complete wrapping of the FRP laminate around the column section, a continuous load path shall be provided in accordance with (a) or (b):

(a) If the obstructing structural element covers less than three-quarters of the column face width, FRP anchors shall be inserted in holes drilled through the interfering structural element to provide a continuous load path to develop FRP tension forces around the column section. FRP anchors shall be designed to allow the FRP laminate to reach a strain ε_{fe} of at least 0.006 at the face of the obstruction in accordance with 6.3.4.1.

(b) If the obstructing structural element covers at least three-quarters of the column face width, the obstructing element shall be permitted to be considered as providing confinement required on the column face it intersects.

R6.1.3.4 In cases where completely wrapping a column section is not possible due to obstructions by structural components of the lateral load resisting system, such as where deep narrow spandrel beams intersect columns, continuity in FRP tension forces should be ensured using FRP anchors running through the obstruction. Holes are typically drilled through the obstruction and FRP anchors inserted into the holes and splayed on both sides of the obstruction. Such anchors are

classified as resisting in-plane actions and are required to develop 0.006 strain in the laminates to account for possible strain concentrations across the obstruction under confinement demands. Example details to ensure continuity for the cases listed in 6.1.3.4a and 6.1.3.4b are presented in Figure R6.1.3.4

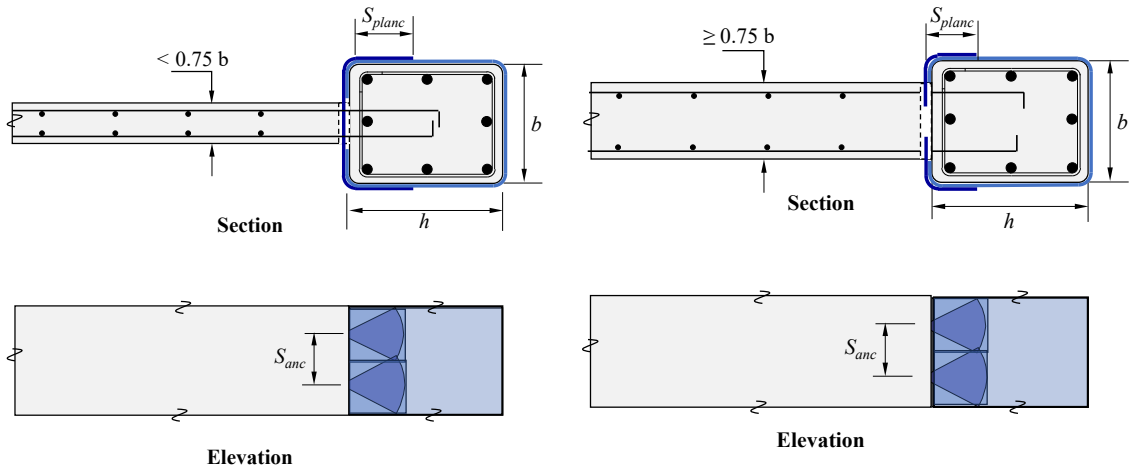

(a) Confinement continuity: Interference width < 0.75 b

(b) Confinement continuity: Interference width ≥ 0.75 b

Figure R6.1.3.4 Confinement continuity through structural obstructions

6.1.3.5 Obstructions created by elements that are not part of the lateral-load system shall be removed to allow complete wrapping of FRP laminates for confinement.

6.1.3.6 FRP transverse reinforcement specified in 6.1.3.9 shall be provided over a length l_0 from each joint face and on both sides of any section where flexural yielding is determined by analysis.

R6.1.3.6 Minimum FRP transverse reinforcement is required to provide confinement to the column sections within the regions where inelastic deformation are expected.

6.1.3.7 Length l_0 shall be calculated in accordance with 18.7.5.1 of ACI 318.

6.1.3.8 Where discrete FRP laminate strips are used for section confinement, clear spacing between strips shall not exceed: (i) the lesser of the smallest section dimension divided by 4, and (ii) 4 in (10 cm).

R6.1.3.8 The limit on the clear spacing of FRP strips is stipulated to ensure adequate confinement effectiveness. The limit is akin to the spacing limit in ACI 318 for hoops in columns of Special Moment Frames.

6.1.3.9 Thickness of FRP laminates confining a column section shall satisfy (a) or (b), as applicable

a) For circular sections

$$Nt_f \geq (0.06)\frac{s_f}{w_f}\frac{f_{cE}^{'}}{0.004E_f}\frac{D}{4} \qquad \text{Eq. } \textit{6.1.3.9a}$$

b) For rectangular sections

$$Nt_f \geq (0.04)\frac{s_f}{w_f}\frac{f_{cE}^{'}}{0.004E_f}\frac{b}{2} \qquad \text{Eq. } \textit{6.1.3.9b}$$

R6.1.3.9 The minimum FRP thickness determined in 6.1.3.9 corresponds to 50 % of the minimum transverse reinforcement required for columns in Special Moment Frames per ACI 318. The required minimum thickness in not intended to result in behavior comparable to that of columns in Special Moment Frames. The beneficial effects of existing transverse reinforcement in the column are not considered in 6.1.3.9. The stress in the FRP laminates for confinement was obtained assuming an FRP strain of 0.004.

6.1.3.10 Where provided for section confinement, FRP anchors shall satisfy 6.3.4.2, with ε_{fe} taken as 0.004.

R6.1.3.10 FRP anchors are not mandated for confinement applications since modeling parameters and acceptance criteria for jacketed columns provided in this document account for confinement effectiveness of FRP layout, with or without anchorage. Anchorage of FRP jackets in rectangular sections can increase the deformation capacity of jacketed columns.

6.1.4 Lap-Splice Confinement

6.1.4.1 Lap-splice confinement provided by FRP system shall be calculated in accordance with 6.3.4.2 and 6.2.4.

6.1.4.2 FRP systems with discrete FRP strips shall not be permitted to confine deficient lap splices in regions of columns where flexural yielding is calculated to occur as a result of lateral displacements beyond the linear elastic range of behavior.

6.1.4.3 Effective yield and peak moments of FRP-jacketed columns shall be calculated in accordance with 6.2.1 for cases without lap-splice deficiencies or 6.2.2 for cases with lap-splice deficiencies.

6.1.4.4 The interaction of axial force and moment acting along orthogonal axes shall be considered in accordance with Section 3.3 in ACI 369.1.

6.1.4.5 Lap splice lengths in FRP strengthened columns shall be permitted to be shorter than $\ell_{d,FRP}$ calculated in accordance with 6.2.4.1.

R6.1.4.5 In some cases, it may not be practical or feasible to design an FRP jacket system to provide sufficient confinement for lap splices to develop $1.15f_{ylE}$. It is permitted to design the FRP system along lap splices that still results in bar slipping within the splice region. However, columns with lap splice lengths shorter than $\ell_{d,FRP}$ are considered splice deficient when evaluating modeling parameter and acceptance criteria per Table 6.5.1.3.

6.1.4.6 It shall be permitted to retrofit columns containing lap-spliced deformed longitudinal reinforcement using FRP composites in regions where flexural yielding is calculated to occur as a result of lateral displacements beyond the linear elastic range of behavior.

6.1.4.7 Continuous FRP laminates shall be applied along the splice over a length at least equal to the greatest of (a) through (c):

(a) ℓ_o as defined in ACI 318, 18.7.5.1

(b) The splice length, ℓ_s, plus the largest section dimension divided by 2

(c) 18 in. [457 mm].

R6.1.4.7 Only continuous FRP jackets are permitted for strengthening lap splices. General requirements for continuous FRP applications are provided in 6.3.3. Where FRP effects are taken

into account to decrease the required splice length of longitudinal bars, the additional requirements in 6.2.4 must be satisfied.

6.1.4.8 The minimum jacket laminate thickness within the lap-spliced region shall be determined in accordance with (a) or (b) as applicable:

(a) For circular columns

$$Nt_f \geq \frac{12A_b f_{ylE} D}{\ell_s E_f} \qquad \text{Eq. 6.1.4.8a}$$

(b) For rectangular columns

$$Nt_f \geq \frac{24A_b f_{ylE}}{\ell_s E_f}\left(\frac{bh}{b+h}\right) \qquad \text{Eq. 6.1.4.8b}$$

R6.1.4.8 Equations 6.1.4.8 are derived using a model proposed by [20] that considers lap-spliced bar failure as a consequence of the formation of splitting cracks around the splices. The coefficients in equations 6.1.4.8 were established by limiting the strain in FRP composite materials to approximately 0.003. Testing has shown that clamping provided by the FRP jacketing material on lap-spliced reinforcement decreases at larger hoop strains.

6.1.4.9 Where provided for splice confinement, FRP anchors shall satisfy 6.3.4.2 , with ε_{fe} taken as 0.003.

R6.1.4.9 where anchors are used for both splice confinement and section confinement such that modeling parameters and acceptance criteria in 6.4 and 6.5 account for the beneficial effects of anchors, ε_{fe} should be taken as 0.004 per 6.1.3.10.

6.2 Strength

6.2.1 Moment-Axial Strength of FRP-Jacketed Columns without Lap-splice Deficiencies after Retrofit

For columns containing continuous longitudinal bars or columns where longitudinal bar splice lengths, ℓ_s, are not less than $\ell_{d,FRP}$ in 6.2.4.1, effective yield moment and peak moment strengths, including the effects of axial force in accordance with 3.3.6 in ACI 369.1, shall be calculated following 6.2.1.1 and 6.2.1.2, respectively. Alternatively, effective yield moment and peak moment strengths shall be permitted to be established from rational section analysis considering confinement effect on the concrete and strain hardening of the steel reinforcement, or experimental tests in accordance with 4.2.

R6.2.1 Expected material properties are specified in 6.2.1.1 and 6.2.1.2 for moment strengths since combined moment and axial action in jacketed columns are treated as deformation controlled per 6.1.1.1.

6.2.1.1 Effective Yield Moment

Effective yield moment of column sections confined using FRP jackets shall be calculated following the design assumptions in (a) through (c):

(a) Tension stresses in the concrete shall be neglected.
(b) Concrete compressive stresses are considered distributed over the depth *a* as defined in ACI 318, 22.2.2.4.1, and with constant value equal to 0.85 f'_{cE}.
(c) Tension stresses in longitudinal reinforcement shall be considered equal to f_{ylE}

R6.2.1.1 expected material properties are specified for moment strength since combined moment and axial actions in jacketed columns are treated as deformation controlled per 6.1.1.1.

6.2.1.2 Peak Moment

Peak moment of column sections confined using FRP jackets shall be determined in accordance with 6.2.1.2.1 and 6.2.1.2.2.

6.2.1.2.1 Peak moment shall be calculated following the design assumptions for moment and axial strength specified in ACI 318, 22.2, but with the modifications specified in (a) through (c):

(a) Maximum concrete strain in the extreme compression fiber, ε_{ccu}, shall be equal to 0.004.
(b) Concrete compressive stresses shall be considered distributed over the depth *a* as defined in ACI 318, 22.2.2.4.1, and with constant value equal to 0.85 f'_{ccE}. Alternatively, a relationship between concrete compressive stress and strain represented by a shape resulting in prediction of strength in substantial agreement with test results per 4.2 shall be permitted.
(c) Tension stresses in the longitudinal reinforcement shall be assumed equal to 1.15 f_{ylE}.

*R6.2.1.2.1 Peak moment is the moment strength at Point C in ACI 369.1 Fig.3.1.2.2. A factor of 1.15 applied to the measured yield stress of longitudinal bars was found to provide a reasonable estimate of column peak moment strength based on an extensive database [21]. When expected yield stress in bars is taken as 1.25 times the specified or lower-bound values based on 2.2.1.2 in ACI 369.1, the result would be to magnify the specified yield stress by 1.25*1.15= 1.4. This contrasts the ACI 318 requirement for calculating the probable moment strength, which applies a factor of 1.25 on the specified or lower-bound yield stress. The source of this discrepancy partly comes from the factor converting from lower-bound to expected steel stress in 2.2.1.2 of ACI 369.1 being relatively large for newer production of reinforcing bars, particularly for grade 60 and stronger bars [22].*

6.2.1.2.2 Confined concrete peak stress f'_{ccE} shall be permitted to be calculated using rational analysis but shall not be taken larger than 1.3 f'_{cE}. Alternatively, it shall be permitted to take $f'_{ccE} = 1.2\ f'_{cE}$ for columns jacketed using FRP satisfying 6.1.

R6.2.1.2.2 The increase in compressive strength under inelastic strain demands as a result of confinement using FRP jackets is well documented (ACI 440.2). Various concrete confinement models are available in the literature. Modification of models developed to capture the confining effects of transverse steel reinforcement, such as the one by Mander et al. (1982), have been proposed to capture the distinct confining effects of FRP composite materials (Lam and Teng 2003a, 2003b). The use of FRP anchors to increase the confining efficiency of FRP composite jackets was studied by Hany (2017) and Kim et al. (2009). ACI 440.2 provides guidance on estimating the confined concrete compression strength for concrete sections under inelastic strain demands confined using FRP.

6.2.2 Moment-Axial Strength of FRP-Jacketed Columns with Lap-splice Deficiencies after Retrofit

For columns containing longitudinal bar lap splices of length less than $\ell_{d,FRP}$ in 6.2.4.1, effective yield and peak moment, including the effects of axial force in accordance with 3.3.6 in ACI 369.1, shall be calculated in accordance with 6.2.2.2 and 6.2.2.3, respectively. Alternatively, effective yield and peak moments shall be permitted to be established from rational analysis, or experimental tests in accordance with 4.2.

R6.2.2 Moment strength of columns containing FRP-jacketed lap-spliced bars in potential hinge regions can be determined through laboratory testing of components with representative details to those in the building being retrofitted. Because conducting laboratory tests is not always feasible, it is also permitted to calculate strength using basic principles of mechanics or accepted methods contained in ACI 318, with proper modification to account for the maximum bar stress that can be developed along splices and the effect of FRP jackets on material constitutive models.

Expected material properties are specified in 6.2.2.2 and 6.2.2.3 for moment strengths since combined moment and axial action in jacketed columns are treated as deformation controlled per 6.1.1.1, even if splice deficiency is not fully addressed using jacketing. Modeling parameters and acceptance criteria for columns with splice deficiency after jacketing are given in Table 6.5.1.3, which points to criteria for splice deficient columns in ACI 369.1.

6.2.2.1 If the existing lap splice length is shorter than $\ell_{d,FRP}$ in 6.2.4.1, the stress that can be developed in lap-spliced bars shall be calculated using Equation 6.2.2.1.

$$f_S = 1.25\left(\frac{\ell_s}{\ell_{d,FRP}}\right)^{2/3} f_{ylL} \leq 1.05 f_{ylE} \qquad \text{Eq. } 6.2.2.1$$

R6.2.2.1 Short splices of longitudinal reinforcement in plastic hinge regions of columns may limit bars from developing stresses past yield. Equation 6.2.2.1 is used to estimate the stress that can be developed in spliced bars where FRP jacketing is used. The equation follows the form used in ACI 369.1 for splice deficient components, which was based on work by [23]. Calculated bar stresses are used to calculate effective yield and peak moment strengths of columns containing this type of retrofit. Some slip can be expected at large deformation demands even in well confined short splices, which can curtail the hardening of longitudinal bars (Kim et al. (2009)). A limit on the maximum bar stress that can be developed in columns with deficient splices is imposed at 1.05 f_{ylE}, to account for such slip. The damage in the FRP-jacketed region is not as significant as that in unretrofitted region and do not affect the performance of the lap-spliced reinforcing steel. The degraded development length due to the damage in the region of inelastic deformation required in 3.5 in ACI369.1 need not be considered for lap-sliced reinforcing steel in an FRP- jacketed region.

6.2.2.2 Effective Yield Moment

Effective yield moment of column sections confined using FRP jackets in regions of lap-spliced bars shall be calculated following the design assumptions in (a) through (c):

(a) Tension stresses in the concrete shall be neglected.
(b) Concrete compressive stresses shall be distributed over the depth *a* as defined in ACI 318, 22.2.2.4.1, and with constant value equal to 0.85 f'_{cE}.
(c) Tension stresses in longitudinal reinforcement shall be equal to f_s determined using Equation *6.2.2.1*, except that the maximum stress shall be limited to f_{ylE}.

R6.2.2.2 Yield moment strength in FRP-retrofitted regions of columns containing lap-splice deficiencies can be determined using assumptions commonly used in reinforced concrete design with modifications as indicated in 6.2.2.2. The distribution of concrete compressive stresses is replaced by an equivalent stress block with properties provided in ACI 318 22.2. Depending on the lapped bar length and the properties of the FRP materials used, the stress in spliced bars may be less than yield even if the section is jacketed using FRP composites. Using Equation 6.2.2.1 to determine f_s is intended to account for the possibility of stress values lower than yield in the case of jacketed short lap splices.

6.2.2.3 Peak Moment Strength

Peak moment strength of column sections confined using FRP jackets in regions of lap-spliced bars shall be determined in accordance with 6.2.2.3.1 and 6.2.2.3.2.

6.2.2.3.1 Peak moment shall be calculated following the design assumptions for moment and axial strength specified in ACI 318, 22.2, but with the modifications specified in (a) through (d):

(a) Tension stresses in the concrete shall be neglected.

(b) Maximum concrete strain in the extreme compression fiber, ε_{ccu}, shall be equal to 0.004.

(c) Concrete compressive stresses shall be distributed over the depth *a* as defined in ACI 318, 22.2.2.4.1, and with constant value equal to 0.85 f'_{ccE}.

(d) Tension stresses in longitudinal reinforcement shall be equal to f_s determined using Equation 6.2.2.1.

6.2.2.3.2 Confined concrete peak stress f'_{ccE} shall be permitted to be calculated using rational analysis but shall not be taken larger than 1.2 f'_{cE}. Alternatively, it shall be permitted to take f'_{ccE} = 1.1 f'_{cE} for columns jacketed using FRP satisfying 6.1.

R6.2.2.3.2 Lower confined concrete peak stresses are prescribed for splice deficient sections than non-deficient sections since slipping along splices can curtail the development of confining stresses.

6.2.3 Shear Strength of FRP-Jacketed Columns

For column sections fully wrapped around their perimeter with FRP jackets, the shear strength V_{CL} shall be permitted to be calculated using Eq. 6.2.3a and b.

$$V_{CL} = 0.75\left(V_{Col0L} + 0.95\, V_{fL}\right) \quad \text{Eq. 6.2.3a}$$

$$V_{col0L} + 0.95V_{fL} \leq 10\sqrt{f'_{cL}}\, b_w d \text{ (psi units)} \quad \text{Eq. 6.2.3b}$$

$$V_{col0L} + 0.95V_{fL} \leq 0.83\sqrt{f'_{cL}}\, b_w d \text{ (MPa units)}$$

Where:

V_{col0L} is determined from ACI 369.1, 4.2.3 using lower-bound material properties.

$$V_{fL} = A_{fv}\, \varepsilon_{fe}\, E_f \left(\frac{\mathrm{h}}{s_f}\right)$$

$$A_{fv} = 2N\, t_f\, w_f$$

ε_{fe} = 0.004 for fully wrapped columns

$s_f = w_f$ for continuous jackets

*R*6.2.3 *The shear strength of a FRP retrofitted column is calculated by adding the contribution of the FRP jacket to the lower-bound shear strength V_{col0L}. This approach is similar to the one adopted in ACI 440S. A 0.75 factor and lower-bound material properties are used in Eq.* 6.2.3*a to ensure that peak moment strength is reached prior to reaching shear strength of FRP-wrapped columns. The 0.95 factor is only applicable to completely wrapped columns (ACI 440S). The upper-bound limit in Eq.* 6.2.3*b is set to avoid crushing of diagonal struts.*

6.2.4 Development of Lap-Spliced Reinforcing Steel in FRP-Jacketed Regions

6.2.4.1 Straight bar development in tension

The required development length for deformed lap-spliced bars, $\ell_{d,FRP}$, in column regions retrofitted using FRP composites, shall be calculated according to the provisions of ACI 318, 25.4.2.4 and 25.4.2.5, with the following modifications:

(a) f_y shall be replaced with f_{ylE}

(b) The confinement term $(c_b+K_{tr})/d_b$ shall be replaced with $(c_b+K_{tr}+K_{tr,FRP})/d_b$, not to exceed 3.5.

6.2.4.1.1 $K_{tr,FRP}$ shall be calculated using (i) or (ii) as applicable:

(i) For splice length, ℓ_s, equal to or larger than 20 times the diameter of the largest longitudinal bar, and continuous FRP applications within the splice length:

$$K_{tr,FRP} = \frac{0.0020\, A_f E_f}{1500 n_s} \text{ (psi units)} \qquad \text{Eq. 6.2.4.1.1a}$$

$$K_{tr,FRP} = \frac{0.0020\, A_f E_f}{337 n_s} \text{ (MPa units)}$$

With, $A_f = 2Nt_f$ Eq. 6.2.4.1.1b

(ii) For other cases:

$$K_{tr,FRP} = 0 \qquad \text{Eq. 6.2.4.1.1c}$$

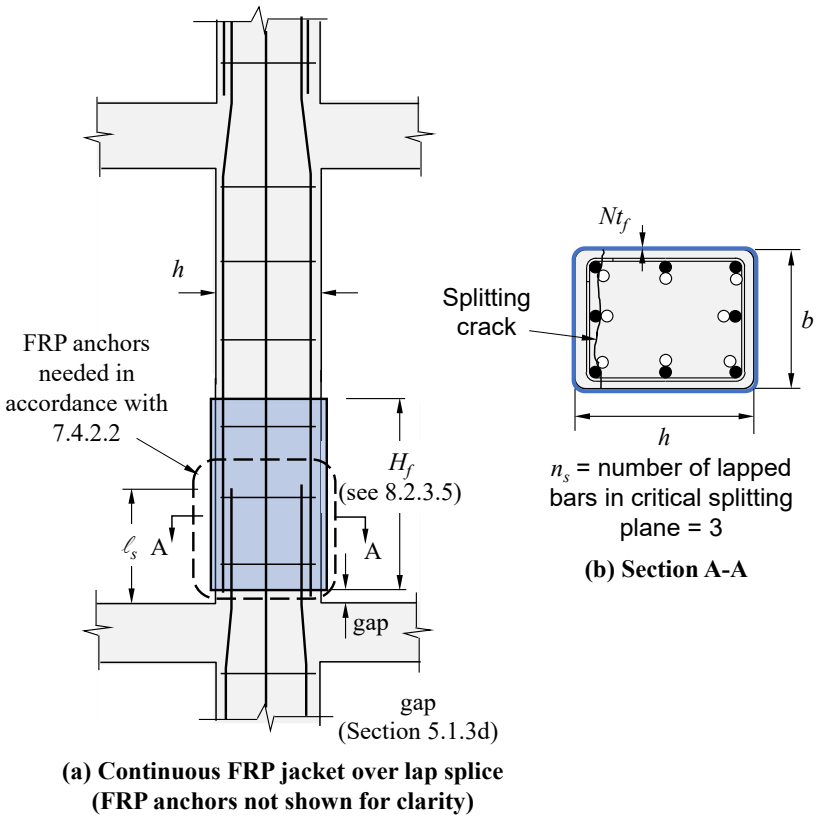

Figure R6.2.4.1.1 FRP jacketing of lap-spliced bars in hinging regions of columns

Where $K_{tr,FRP}$ is calculated using Eq. 6.2.4.1.1a for rectangular sections, double-splay FRP anchors or FRP anchors with evenly distributed radial splays shall be used as required in 6.3.4.2.

*R*6.2.4.1.1 *Minimum anchorage requirements in 6.3.4.2.2 are intended to control bond splitting across wider faces of rectangular sections and permit use of Eq.* 6.2.4.1.1*a. No anchorage is required for rectangular columns along sectional dimensions less than 14 in* [356 mm].

6.3 Detailing

6.3.1 Scope

Minimum detailing requirements of FRP systems used to jacket concrete columns shall be in accordance with 6.3.2 and 6.3.3. For FRP jacket applications, FRP laminates shall be installed with fibers oriented perpendicular to the component axis.

R6.3.1 This document permits FRP jackets consisting of continuous FRP laminates or discrete FRP laminate strips.

6.3.2 Discrete FRP Strips

Discrete FRP strips shall satisfy the requirements of (a) through (f)

(a) FRP laminates shall completely wrap a column with an overlap sufficient to develop the fracture strength of the laminates but not less than 12 in. [305 mm], unless a shorter overlap can be justified by experimental data satisfying 4.2.

(b) Where continuous wrapping is not possible due to obstructions, a continuous load path for FRP tensile forces shall be provided through the obstructions using FRP anchors per 6.3.4.1 and 6.1.3.4.

(c) Strip width shall not be less than 4 in. [102 mm].

(d) Clear spacing between strips shall not exceed the smallest section dimension divided by 4.

(e) The distance between the edge of a laminate and the surface of the slab, footing or beam framing into a column shall be at least 0.5 in. [12.7 mm] but not greater than the lesser of: i) the smallest section dimension of the column divided by 6, and ii) 2 in. [51 mm].

(f) Total thickness of strip laminate shall be less than 0.3 in. [7.6 mm].

R6.3.2 Using discrete FRP strips prevents moisture from being trapped within the column and facilitates inspection of the strengthened component. The possibility to inspect damage may be particularly useful for post-earthquake damage assessments. Shear strengthening studies on concrete beams have indicated that where strips are spaced farther than section depth divided by 4, inclined cracking may be diverted to run between the strips, thereby reducing shear capacity [7, 24]). The minimum gap in (e) is intended to prevent the FRP jacket from bearing against the members framing into the column. Bearing of the jacket against horizontal members of the framing system may increase the moment strength of the jacketed column thereby creating a higher shear demand in columns undergoing inelastic lateral deformations.

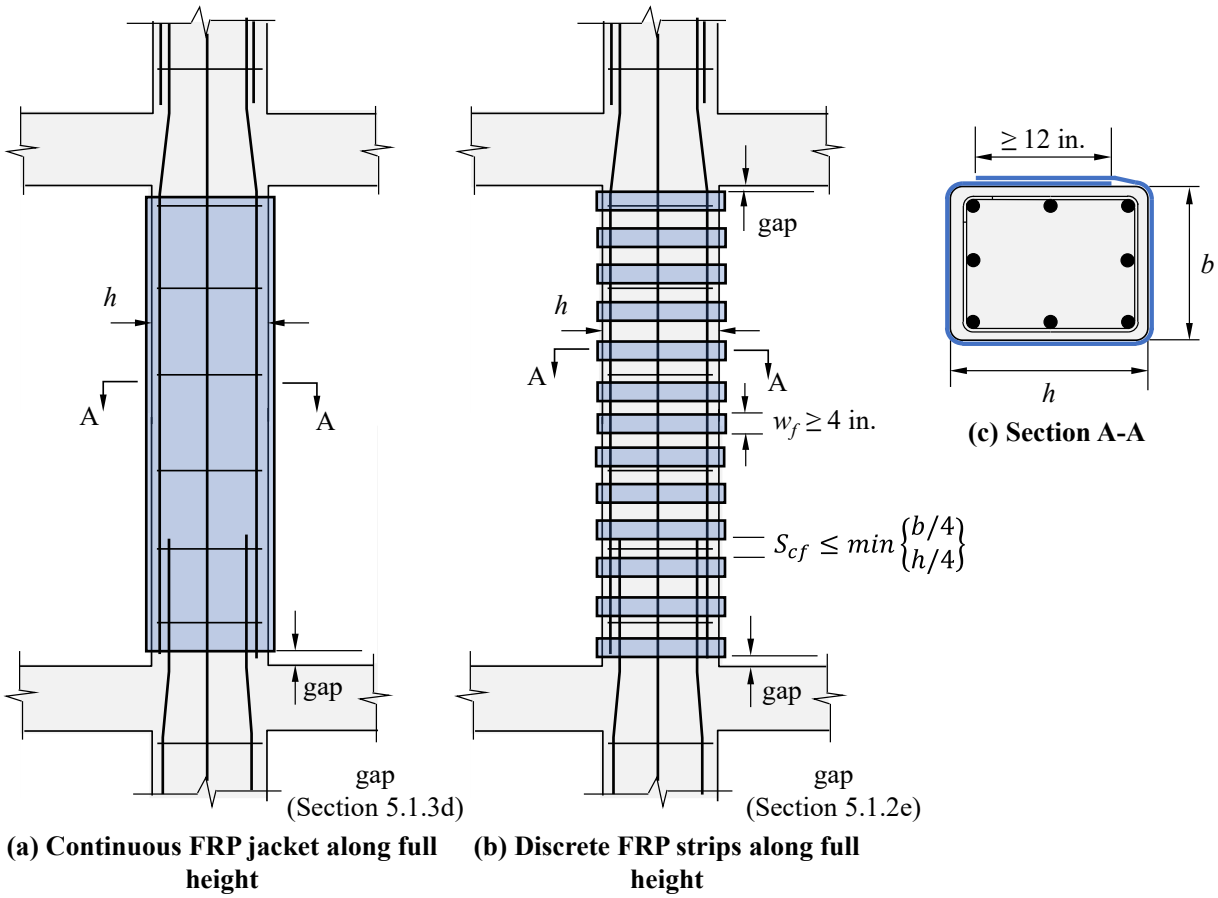

Figure R6.3.2 Details of FRP Laminates Installed throughout Column Height

6.3.3 FRP Continuous Applications

FRP laminates that are continuous along the unsupported length of columns shall satisfy the requirements of (a) through (g)

(a) FRP laminates shall completely wrap a column with an overlap sufficient to develop the fracture strength of the laminates but not less than 12 in. [305 mm], unless a shorter overlap can be justified by experimental data satisfying 4.2.

(b) Where continuous wrapping is not possible due to obstructions, a continuous load path for FRP tensile forces shall be provided through the obstructions using FRP anchors per 6.3.4.1 and 6.1.3.4.

(c) Width of individual sheets forming the continuous FRP system shall not be less than the smallest section dimension divided by 4 and 4 in. [102 mm].

(d) The distance between the edge of a laminate and the surface of the slab, footing or beam framing into a column shall be at least 0.5 in. [12.7 mm] but not greater than the lesser of: i) the smallest section dimension of the column divided by 6, and ii) 2 in. [51 mm].

(e) Total thickness of laminate shall be less than 0.3 in. [7.6 mm].

(f) Individual sheets forming the continuous FRP system need not overlap along the length of the component in the direction perpendicular to the main fibers.

(g) Gaps between individual sheets forming the continuous FRP system shall satisfy limits in ACI 440.12.

R6.3.3 FRP fabric used in wet layup applications are typically available in standard sheet widths not exceeding 24 in. [610 mm]. A continuous application of FRP laminates for column jacketing consists of applying available FRP sheet widths with gaps between them not exceeding limits in ACI 440.12.

6.3.4 FRP anchor detailing for columns

Where FRP anchors are used in columns, 6.3.4.1 and 6.3.4.2 shall be satisfied, as applicable.

6.3.4.1 Anchors resisting in-plane actions

6.3.4.1.1 FRP anchors resisting in-plane actions shall satisfy 5.3

6.3.4.1.2 The gross laminate area, A_{anc}, of each individual anchor resisting in-plane tension stresses shall be determined by Eq. 6.3.4.1.2a to c.

$$A_{anc} \geq \frac{1.5\varepsilon_{fe}}{\varepsilon_{fuL}} R_{AC}\left(N t_f w_{anc}\right) \qquad \textit{for single-splay anchors} \qquad \textit{Eq. 6.3.4.1.2a}$$

$$A_{anc} \geq \frac{1.5\varepsilon_{fe}}{\varepsilon_{fuL}} 2R_{AC}\left(N t_f w_{anc}\right) \qquad \textit{for double-splay anchors} \qquad \textit{Eq. 6.3.4.1.2b}$$

$$\frac{1}{3} \leq \frac{1.5\varepsilon_{fe}}{\varepsilon_{fuL}} \leq 1 \qquad \text{Eq. 6.3.4.1.2c}$$

where R_{AC} is the ratio of the anchor cross-sectional fiber area to the anchored laminate fiber area and shall be taken as 1.50 for $w_{anc} \leq 6$ in. [152 mm] and 2.00 for $w_{anc} = 10$ in. [254 mm] and varies linearly between $w_{anc} = 6$ in. [152 mm] and 10 in. [245 mm].

R6.3.4.1.2 Surface strain measurements conducted on anchored FRP laminates crossing flexural and shear cracks in concrete members have shown that the peak fiber strain in an anchored laminate can exceed 1.5 times the mean strain in the laminates crossing the critical crack [1, 2, 9, 18]. The anchor laminate area relations are derived from work by [18] and adjusted in ACI 440.2.

6.3.4.2 Anchors resisting out-of-plane actions

6.3.4.2.1 FRP anchors resisting out-of-plane actions shall satisfy 5.3.

6.3.4.2.2 FRP Anchors in retrofitted lap-splice regions of rectangular sections

6.3.4.2.2.1 FRP anchor spacing along member face, h_j *and* b_j, shall not exceed the lesser of 14 in. [356 mm] and twice the spacing between longitudinal reinforcing bars.

R6.3.4.2.2.1 FRP anchors need not be used if member section dimensions are less than the maximum spacing requirement of 14 in. [356 mm]. Studies [5] have indicated that a tighter spacing of FRP anchors improves the deformation capacity of columns with strengthened splices.

6.3.4.2.2.2 FRP anchor center to center spacing along splice length shall not exceed the lesser of 12 in. [305 mm] and w_{anc}+4 in. [102 mm].

6.3.4.2.2.3 A minimum of one row of FRP anchors shall be provided along lap splices not longer than 10 in [254 mm]. and two rows of anchors shall be provided along longer lap splices.

6.3.4.2.2.4 The cross-sectional area of each individual FRP anchor crossing the potential splice splitting plane on each component face shall be at least:

$$A_{anc} = \frac{1}{(0.003E_f)n_{ancsp}}\left(\frac{1.25A_{sface}f_{ylE}}{1.4} - 2w_{fsp}Nt_f(0.003E_f) - \frac{A_v f_{ytE} l_s}{s}\right) \geq 0.2\ in.^2\ [127.5\ \text{mm}^2]$$

Eq. 6.3.4.2.2.4

Where $1.25A_{sface}f_{ylE}$ shall be less than the maximum V_n in ACI 318 22.9.4.4. A_c for the V_n shall be calculated as $b\ell_s$.

R6.3.4.2.2.4 Eq. 6.3.4.2.2.4intends to provide sufficient clamping force to prevent premature splitting failure along lap splices [5]. Existing transverse reinforcement, FRP jacket, and FRP anchors develop clamping forces across the splitting plane with area $b\ell_s$*. Eq. 6.3.4.2.2.4 assumes that the maximum expected force transferred through the splice region at a column face,* $1.25A_{sface}f_{ylE}$*, is resisted by a shear friction mechanism developed by clamping forces and a friction coefficient of 1.4. The effective strain of FRP is taken as 0.003. An example of the FRP anchors strengthening lap splices is shown in Figure R6.3.4.2.2.4. FRP anchors with evenly distributed radial splays to confine splices have been used by [5]. Double splay anchors with fibers oriented along FRP laminate fibers can also be used to confine splices.*

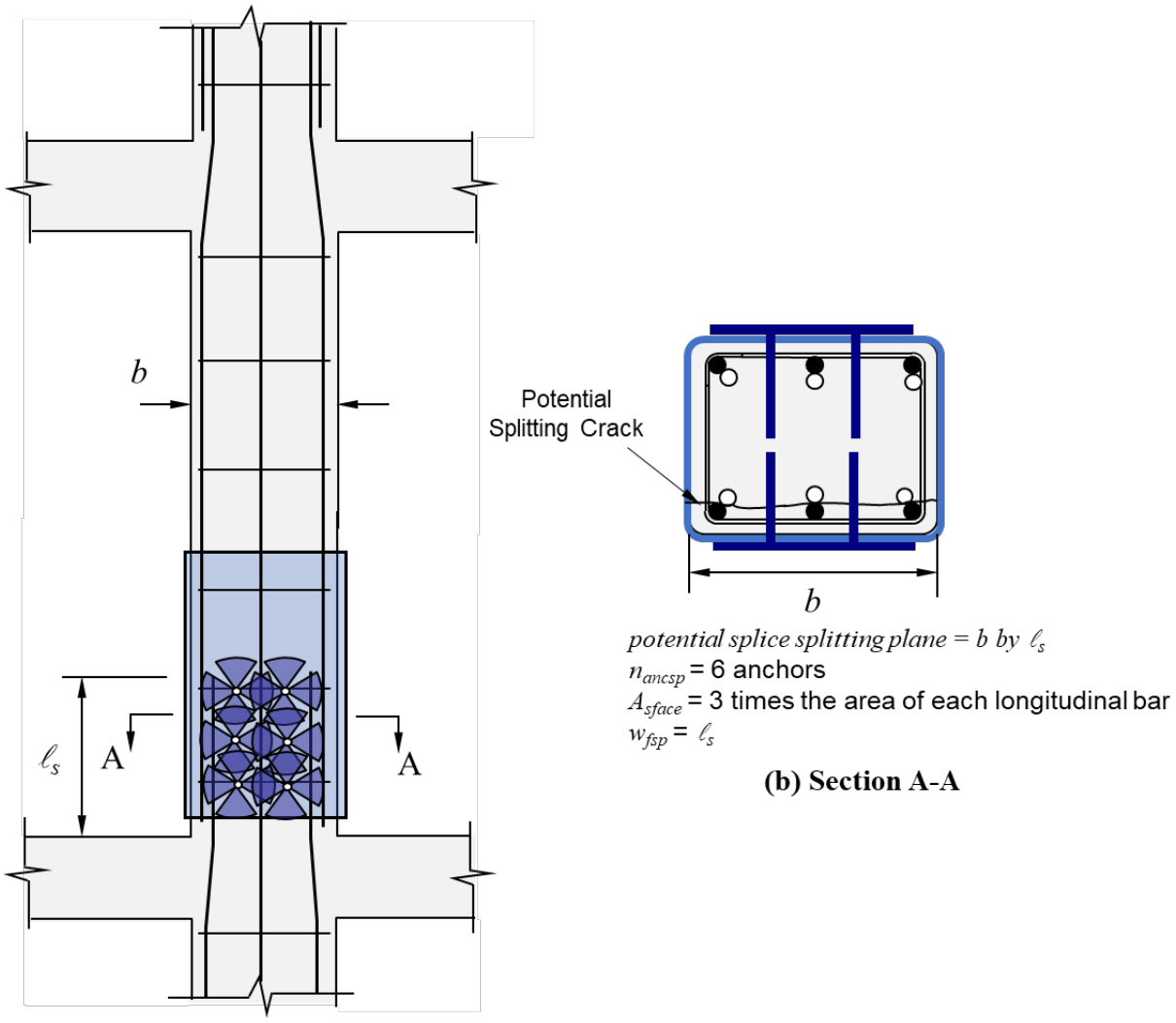

Figure R6.3.4.2.2.4 FRP anchors strengthening lap splices example

6.3.4.2.2.5 FRP anchors shall not be considered effective in strengthening lap splices of bars larger than no. 11.

6.3.4.2.2.6 Where lap splices are shorter than $\ell_{d,FRP}$ in 6.2.4.1, it shall be permitted to use a lower anchor area than required in 6.3.4.2.2.4 by the ratio of $f_s/1.05f_{ylE}$, where f_s is calculated per Equation 6.2.2.1.

R6.3.4.2.2.6 – For short lap splices, it may not be possible to prevent lap-splice degradation by providing FRP anchors for additional clamping as the mode of failure transitions from splitting to bar pullout. In other cases, it may not be practical to provide a sufficiently large clamping forces to preclude a splice splitting failure. In such cases, the requirement in 6.3.4.2.2.4 does not need to be satisfied; however, the splice deficiency cannot be considered addressed and

modeling parameters and acceptance criteria selected should reflect this potential mode of degradation. This provision allows strengthening lap splices to achieve a higher longitudinal bar stress f_s, without providing the amount required in 6.3.4.2.2.4. In such a case, splice deficiency cannot be deemed resolved when using modeling parameters and acceptance criteria in accordance with 6.4 and 6.5.

6.3.4.2.3 Anchors for confinement of rectangular sections

6.3.4.2.3.1 Where FRP anchors are used to enhance section confinement, anchor spacing along member length shall not exceed the lesser of 12 in. [305 mm] and W_{anc}+4 in. [102 mm].

R6.3.4.2.3.1 Spacing of anchors is limited along column length to control buckling of longitudinal bars as well as provide effective concrete confinement. The requirement is based on ACI 318 spacing requirement for hoops of columns in special moment resisting frames, which have a minimum spacing requirement of 4 in. [102 mm]. The use of modeling parameters and acceptance criteria in 6.4 and 6.5 is not limited to cases where FRP anchors are used for confinement. Modeling parameters and acceptance criteria, however, do account for increased confinement effectiveness provided by anchors satisfying 6.3.4.2.3.

6.3.4.2.3.2 Where FRP anchors are used to enhance confinement, a minimum of two rows of anchors shall be provided along component length within distance l_0 specified in 6.1.3.6 and 6.1.3.7.

6.3.4.2.3.3 The gross laminate area, A_{anc}, of each individual anchor used for confinement shall be determined by Eq. 6.3.4.2.3.3

$$A_{anc} \geq \left(0.8 N t_f w_{anc}\right) \qquad \textit{Eq. 6.3.4.2.3.3}$$

R6.3.4.2.3.3 [5] successfully used a ratio of anchor area to laminate area of 1 to confine columns. A minimum ratio of 0.8 is deemed sufficient to provide adequate confinement based on that work. In Eq.6.3.4.2.3.3, $N t_f$ is determined per 6.1.3.9.

6.4 Linear static and dynamic procedures

6.4.1 Modeling

6.4.1.1 The analytical model for a reinforced concrete column retrofitted with FRP systems shall represent component stiffness considering axial, flexural, and shear actions. Potential controlling mechanisms in flexure, shear, and reinforcement development at any location in the column shall be considered. Interaction with other structural and nonstructural components shall be included.

6.4.1.2 The effective stiffness values in Table 3.1.2.1 of ACI 369.1 shall be permitted for a column retrofitted with FRP laminates having fibers in the direction transverse to the length of the column. Alternative stiffness values shall be permitted if they can be demonstrated to provide required strength and deformation capacities by representative experimental testing satisfying 4.2.

R6.4.1.2 The contribution of the FRP systems to the stiffness of a retrofitted reinforced concrete column where fibers are oriented transversely to column span is relatively small and is permitted to be ignored. Where FRP fibers align with column span, increases in lateral stiffness can be expected.

6.4.2 Acceptance Criteria

6.4.2.1 Acceptance criteria for linear procedures for columns retrofitted using FRP systems that satisfy 6.1 are specified in Table 6.4.2.1.

Table 6.4.2.1 —Numerical acceptance criteria for linear procedures—reinforced concrete columns jacketed using FRP systems

Component type	*m*-factors[a,b,c]		
	Performance level		
	IO	LS	CP
Primary	$1 \le \frac{3}{8}\left(\frac{d_{nl}}{\theta_{yE}}\right) \le 2$	$\frac{9}{16}\left(\frac{d_{nl}}{\theta_{yE}}\right)$	$\frac{9}{16}\left(\frac{e_{nl}}{\theta_{yE}}\right)$
Secondary		$\frac{9}{16}\left(\frac{e_{nl}}{\theta_{yE}}\right)$	$\frac{3}{4}\left(\frac{e_{nl}}{\theta_{yE}}\right)$

[a] θ_{yE} shall be calculated per 4.2.2.2.3 of ACI 369.1
[b] The acceptance criteria for primary members shall not be taken larger than those for secondary members.
Nonlinear modeling paramters d_{nl} and e_{nl} shall be taken from Table 6.5.1.3.

R6.4.2.1 The use of acceptance criteria provided in Table 6.4.2.1 is only applicable for columns that comply with requirements of 6.1. FRP jacket requirements in 6.1 address deficiencies associated with inadequate: (i) confinement, (ii) shear strength, and (iii) splice strength. Retrofit design criteria are intended to minimize the likelihood of retrofitted components sustaining brittle strength degradation modes, thus enabling the development of the strength and deformation capacities corresponding to the acceptance criteria. A flexural hinging behavioral mode is targeted for columns jacketed using FRP.

6.4.2.1.1 Alternative FRP jacket acceptance criteria shall be permitted if they can be demonstrated to provide required strength and deformation capacities by representative experimental testing satisfying 4.2.

6.5 Nonlinear static and dynamic procedures

6.5.1 Modeling

6.5.1.1 The analytical model for a reinforced concrete column retrofitted with FRP systems shall represent component effective stiffness and nonlinear deformation considering axial, flexural, and shear actions. Potential controlling mechanisms in flexure, shear, and reinforcement development at any point in the column shall be considered. Interaction with other structural and nonstructural components shall be included.

6.5.1.2 The effective stiffness values in Table 3.1.2.2.4 of ACI 369.1 shall be permitted for a column retrofitted with FRP composites having fibers in the direction transverse to the length of the column. Alternative stiffness values are permitted if they can be demonstrated to provide required strength and deformation capacities by representative experimental testing satisfying 4.2.

R6.5.1.2 The contribution of the FRP systems to the stiffness of a retrofitted reinforced concrete column where fibers are oriented transversely to column span is relatively small. Where FRP fibers align with column span, increases in lateral stiffness can be expected.

6.5.1.3 Nonlinear deformation is permitted to be modeled using the modeling parameters in Table 6.5.1.3 for columns jacketed using FRP that comply with requirements of 6.1.

Table 6.5.1.3 —Modeling parameters and numerical acceptance criteria for nonlinear procedures: reinforced concrete columns jacketed using FRP composites

Modeling parameters	Acceptance criteria		
Total rotation angles d_{nl} and e_{nl}, rad Residual strength ratio c_{nl}	Total rotation angle, rad		
	Performance level		
	IO	LS	CP
Columns not controlled by inadequate development or splicing along the clear length*			
$\theta_{yE} \le d_{nl} = 0.034 - 0.06\left(\frac{N_{UD}}{A_g f'_{cE}}\right)^2 + 0.2\frac{\left(\rho_t f_{yt} + 0.004E_f\rho_{ft}\right)\left(\frac{A_{eff}}{A_g}\right)^2}{f'_{cE}} \le 0.07$ $e_{nl} = 1.2d_{nl}$	$\theta_{yE} \le \theta_{yE} + 0.15(d_{nl} - \theta_{yE}) \le \theta_{yE} + 0.005$	$0.5e_{n\ell}$	$0.7e_{n\ell}$
$c_{nl} = 0.2$			
Columns controlled by inadequate development or splicing along the clear length§			
Use parameters in Table 4.2.2.2.2b or Table 4.2.2.2.2c of ACI 369.1, as applicable			

* Columns are considered not controlled by inadequate development or splicing where lap-splice length is longer than $\ell_{d,FRP}$ calculated in accordance with 6.2.4.1 for FRP-jacketed columns, or as specified in 3.5 of ACI 369.1 for non-jacketed columns

§ Columns are considered controlled by inadequate development or splicing where splice length is shorter than $\ell_{d,FRP}$ calculated in accordance with 6.2.4.1.

Where:

$\rho_{ft} = \frac{2Nt_f}{b}\frac{w_f}{s_f}$ for rectangular sections

$\rho_{ft} = \frac{2Nt_f}{D}\frac{w_f}{s_f}$ for circular sections

$\frac{w_f}{s_f} = 1$ for continuous FRP applications

$$0.0 \le \frac{A_{eff}}{A_g} = 1 - \frac{\left[(N_{anc_h}+1)h_j^2 + (N_{anc_b}+1)b_j^2\right]}{3bh} \le 0.9 \textit{ for rectangular sections}$$

$$\frac{A_{eff}}{A_g} = 0.9 \textit{ for circular sections}$$

$$h_j = \frac{h - 2R_{edge}}{N_{anc_h} + 1} \qquad b_j = \frac{b - 2R_{edge}}{N_{anc_b} + 1}$$

R6.5.1.3 Modeling parameters given in Table 6.5.1.3 should only be used for columns retrofitted using FRP systems satisfying 6.1. Provisions in 6.1 are intended to result in retrofits that preclude shear and anchorage modes of strength degradation, such that flexural yielding occurs in the retrofitted columns. Modeling parameters given in Table 6.5.1.3 represent median estimates of parameters extracted from FRP-retrofitted column tests. For columns with longitudinal bars that are adequately anchored or spliced, the equation for modeling parameter d_{n_ℓ} was obtained from a weighted regression analysis of the data. The equation defining d_{n_ℓ} accounts for the effectiveness of FRP jacketing in confining the concrete cross-section through the term A_{eff}/A_g. This cross-section confinement effectiveness term is based on one proposed by [25], but is adjusted to consider the beneficial effects of rounding column edges to a larger radius R_{edge} as described in [26, 27]. Improved confinement effectiveness is achieved by using FRP anchors that reduce the spacing between transverse anchorage points (h_j and b_j in Figure R6.5.1.3) and by increasing the radius used to round column edges, R_{edge}.

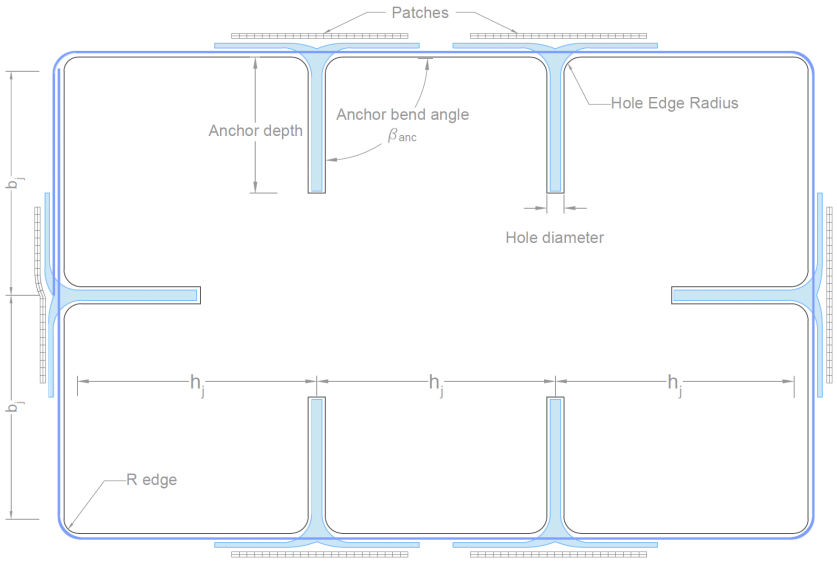

Figure R6.5.1.3: Section details

Table R6.5.1.3a presents the practical range of modeling parameters for retrofitted concrete columns evaluated using the equations in Table 6.5.1.3. Due to the lack of tests of jacketed concrete columns conducted to axial collapse, modeling parameter e_{n_ℓ} is defined conservatively.

Table R6.5.1.3a—Range of values of nonlinear modeling parameters for concrete columns jacketed using FRP

$N_{UD}/(A_g f'_{cE})$	$\frac{(\rho_t f_{yt} + 0.004 E_f \rho_{ft})}{f'_{cE}}$	A_{eff}/A_g	$d_{n\ell}$, rad	$e_{n\ell}$, rad
0	0.057	0.3	0.036	0.043
0	0.057	0.9	0.043	0.052
0	0.240	0.3	0.046	0.055
0	0.240	0.9	0.070	0.084
0.7	0.057	0.3	0.007	0.008
0.7	0.057	0.9	0.014	0.017
0.7	0.240	0.3	0.016	0.019
0.7	0.240	0.9	0.045	0.054

The tabulated relations for modeling parameters were evaluated using the data from laboratory *tests* [28]. The error ratio was defined as the modeling parameters evaluated from tables divided by the experimental modeling parameter values for the column tests. The error ratios were found to follow lognormal probability distributions for all modeling parameters [28]. Fitted lognormal distributions were used to produce multipliers for the tabulated modeling parameter relations to achieve specific probabilities of exceedance (Table R6.5.1.3b).

Table R6.5.1.3b—Multipliers for concrete column modeling parameters to achieve specific probabilities of exceedance

	Modeling parameter	Multiplier to achieve probability of exceedance		
		40 percent	25 percent	10 percent
Reinforced concrete columns retrofitted using FRP jacketing	$d_{n\ell}$	0.92	0.83	0.67
	$e_{n\ell}$	NA*	NA*	NA*

*Multipliers not available due to limited test data.

Due to lack of collapse data for jacketed columns, acceptance criteria in Table 6.5.1.3 were selected using the same fractions of enl applied in ACI 369.1 for non-retrofitted columns.

6.5.1.3.1.1 Only FRP anchors satisfying 6.3.4.2.3 shall be considered effective in determining N_{anch} and N_{ancb}

6.5.1.3.2 Hysteresis shapes shall be selected in accordance with 3.1.2.2.8 of ACI 369.1.

6.5.2 Acceptance Criteria

6.5.2.1 Acceptance criteria for nonlinear procedures for columns retrofitted using FRP jacketing that satisfy 6.1 are specified in Table 6.5.1.3.

R6.5.2.1 The use of acceptance criteria provided in Table 6.5.1.3 are only applicable for columns that comply with requirements of 6.1. FRP jacket requirements in 6.1 address deficiencies associated with inadequate: (i) confinement, (ii) shear strength, and (iii) splice strength. Retrofit design criteria are intended to minimize the likelihood of retrofitted components sustaining brittle strength degradation modes and result in the strength and deformation capacities defined through provided acceptance criteria and modeling parameters. A flexural hinging behavioral mode is targeted for columns jacketed using FRP.

6.5.2.2 Alternative FRP jacket acceptance criteria are permitted if they can be demonstrated to provide required strength and deformation capacities by representative experimental testing satisfying 4.2.

Appendix A. Notations and Definitions

A_{anc} = gross composite area of FRP anchor, in.^{2}[mm^2]
A_b = Maximum area of spliced longitudinal bars on any face of a column, in.^{2}[mm^2]
A_{eff} = effectively confined cross-sectional area, in.^{2} [mm^2]
A_f = area of FRP composite jacket crossing the critical splitting crack along the lap-spliced bars per unit width, in.^{2} [mm^2]
A_{fv} = area of FRP composite jacket resisting shear forces, in.^{2} [mm^2]
A_g = gross cross-sectional area, in.^{2} [mm^2]
A_h = area of FRP anchor hole, in.^{2}[mm^2]
A_{sface} = area of longitudinal bars spliced on a component face, in.^{2}[mm^2]

b = component section width, in. [mm]

b_j = distance between effective FRP anchorage points along section width *b*, in. [mm]

B_{CL} = manufacturer specified bond strength between FRP laminates and FRP anchor fans, taken as the mean minus three standard deviations from test results, psi [MPa]
B_{IL} = manufacturer specified FRP interlaminar bond strength, taken as the mean minus three standard deviations from test results, psi [MPa]
c_{yE} = flexural compression neutral axis depth at M_{yE}, in. [mm]
d_{anc} = gross composite diameter of FRP anchor, in.

d_b = reinforcing bar diameter, in. [mm]

d_h = FRP anchor hole diameter, in. [mm]

E_f = modulus of elasticity of FRP laminate for design specified by manufacturer, psi [MPa].

f_{cE} = expected concrete compressive strength, psi [MPa].

f_{cL} = lower-bound concrete compressive strength, psi [MPa].

f_{ccE} = expected confined concrete compressive strength, psi [MPa].

f_{fu} = design ultimate tensile strength of FRP laminate, psi [MPa]

f_{fu}^* = ultimate tensile strength of the FRP laminate as reported by the manufacturer, psi [MPa]

f_s = longitudinal reinforcement stress, psi [MPa].

f_{ylE} = expected longitudinal reinforcement yield stress, psi [MPa].

h = component section height, in. [mm]

h_{anc} = embedment depth of FRP anchor in concrete, in. [mm]

H_f = distance along axis of column wrapped by FRP composite, in. [mm]

h_{hole} = depth of FRP anchor hole in concrete, in. [mm]

h_j = distance between effective FRP anchorage points along section height *h*, in. [mm]

K_{tr} = internal transverse reinforcement index, in. [mm]

$K_{tr,FRP}$ = transverse reinforcement index provided by FRP composites, in. [mm]

L_{hinge} = length of component from center to center of hinge regions, in. [mm]

L_{pcj} = design hinge length for columns retrofitted using jacketing, in. [mm]

l_0 = length defined in 18.7.5.1 in ACI 318 over which FRP jacketing is required for columns

ℓ_s = lap splice length, in. [mm]

ℓ_u = unsupported length of column, in. [mm]

$\ell_{d,FRP}$ = required length for developing 1.15 f_{ylE} in bars, calculated in accordance with 6.1.4.

n_{ancsp} = total number of anchors crossing potential splice splitting plane on each component face within splice length ℓ_s

n_s = number of bars spliced in tension

N = number of layers of FRP laminate

N_{anc_h} = number of FRP anchors along member face in direction of section height *h*

N_{anc_b} = number of FRP anchors along member face in direction of section height *b*

N_b = number of FRP layers developed by one contact interface with FRP anchor splay

R_{AC} = ratio of FRP anchor cross-sectional fiber area to the anchored laminate fiber area

R_{edge} = radius of chamfer at member edge where FRP composites are applied, in. [mm]

r_h = FRP anchor-hole edge chamfer radius, in. [mm]

s_{cf} = clear spacing between FRP laminate strips, in. [mm]

s_f = center-to-center spacing between FRP laminate strips, in. [mm]

s_{Ancl} = spacing between FRP anchors in direction of anchored FRP laminate fibers, in. [mm]

s_{Anct} = spacing between FRP anchors in direction perpendicular to anchored FRP laminate fibers in unidirectional FRP applications, in. [mm]

Spl_{anc} = anchor splay length measured along anchored laminate fiber direction, in. [mm]

t_f = thickness of single layer of FRP laminate, in. [mm]

V_{CL} = shear strength of component calculated using lower-bound material properties, lb [N].

V_{fL} = shear strength contribution of FRP calculated using lower-bound material properties, lb. [N]

w_f = width of FRP laminate strip. Total width of FRP laminate for continuous applications, in. [mm]

w_{anc} = width of FRP laminate anchored by one FRP anchor, measured perpendicular to the anchored laminate fiber direction, in. [mm]

w_{fsp} = width of FRP strip along splice length, in. [mm]

α_{anc} = angle over which fiber anchor is splayed over externally bonded FRP, deg.

β_{anc} = embedment angle of fiber anchor, deg.

ε_{fe} = effective design strain for FRP composite

ε_{fuL} = lower-bound fracture strain of FRP composite

γ_{comp} = dry fiber weight per square surface area of one layer of an FRP laminate, oz/in.^{2} [g/mm^2]

λ_{anc} = dry fiber weight per unit length of FRP anchor, oz/in. [g/mm]

ρ_{ft} = FRP transverse reinforcement ratio

ρ_v = Ratio of volume of transverse reinforcement to volume of concrete core confined by it, measures out-to-out of transverse bars

Definitions

Effective Yield Moment – point on component lateral force versus deformation relation, where significant softening occurs due to yield of materials; represented as Point B on the generalized force-deformation curves in ACI 369.1.

FRP - Fiber Reinforced Polymer

FRP composite - material comprising fibers embedded in a polymer matrix.

FRP system—the fibers and resins used to create the composite laminate and resins used to bond it to the concrete substrate. FRP anchors if used are part of the FRP system.

Hinge region - region in a component where materials are expected to undergo inelastic actions under the considered seismic hazard. Hinge regions are defined for different component types.

Hinge length - length along member axis of the hinge region.

interlaminar shear—force producing a relative displacement along the plane of the interface between two laminae.

laminate— one or multiple plies molded together.

7. REFERENCES

Referenced Standards

American Concrete Institute (ACI)

CODE-369.1-22 (2022) —Standard Requirements for Seismic Evaluation and Retrofit of Existing Concrete Buildings (369.1-22) and Commentary (American Concrete Institute, Farmington Hills, MI)

CODE-440S-23 (2023) – Code Requirements for Strengthening Structural Concrete with Fiber-Reinforced Polymer (FRP) Systems—Code and Commentary (American Concrete Institute, Farmington Hills, MI)

PRC-224.1-07 (2007) - Causes, Evaluation, and Repair of Cracks in Concrete Structures (American Concrete Institute, Farmington Hills, MI)

PRC-440.2R-23 (2023) —Guide for the Design and Construction of Externally Bonded FRP Systems for Strengthening Concrete Structures (American Concrete Institute, Farmington Hills, MI)

SPEC-440.8-13 (2013) —Specification for Carbon and Glass Fiber-Reinforced Polymer Materials Made by Wet Layup for External Strengthen (Reapproved 2023) (American Concrete Institute, Farmington Hills, MI)

SPEC-440.12-22 (2022) —Strengthening of Concrete Structures with Externally Bonded Fiber-Reinforced Polymer (FRP) Materials Using the Wet Layup Method—Specification (American Concrete Institute, Farmington Hills, MI)

ASTM International

ASTM International (2017) D7565/D7565M-10 - Standard Test Method for Determining Tensile Properties of Fiber Reinforced Polymer Matrix Composites Used for Strengthening of Civil Structures (ASTM International, West Conshohocken, PA).

ASTM International (2021) D7522-21 - Standard Test Method for Pull-Off Strength for FRP Laminate Systems Bonded to Concrete or Masonry Substrates (ASTM International, West Conshohocken, PA).

Referenced Manuscripts

[1] Pudleiner DK, Jirsa JO, Ghannoum WM (2019) Influence of Anchor Size on Anchored CFRP Systems. *Journal of Composites for Construction* 23(5 : 04019033):1-12.

[2] Sun W, Jirsa JO, Ghannoum WM (2016) Behavior of Anchored CFRP Strips Used for Strengthening Concrete Structures. *ACI Materials Journal* 113(02):163-172.

[3] Sun W , Ghannoum WM (2015) Modeling of anchored CFRP strips bonded to concrete. *Construction and Building Materials* 85:144-156. https://doi.org/http://dx.doi.org/10.1016/j.conbuildmat.2015.03.096

[4] Del Rey Castillo E, Kanitkar R, Smith ST, Griffith MC, Ingham JM (2019) Design approach for FRP spike anchors in FRP-strengthened RC structures. *Composite Structures* 214:23-33. https://doi.org/https://doi.org/10.1016/j.compstruct.2019.01.100

[5] Kim I, Jirsa JO, Bayrak O (2011) Use of Carbon Fiber-Reinforced Polymer Anchors to Repair and Strengthen Lap Splices of Reinforced Concrete Columns. *ACI Structural Journal* 108(5):630-640.

[6] Pham HB, Al-Mahaidi R, Saouma V (2006) Modelling of CFRP–concrete bond using smeared and discrete cracks. *Composite Structures* 75(1–4):145-150. https://doi.org/http://dx.doi.org/10.1016/j.compstruct.2006.04.039

[7] Alotaibi N, Shekarchi W, Ghannoum WM, Jirsa JO (2020) Shear Design of Reinforced Concrete Beams Strengthened in Shear with Anchored Carbon Fiber-Reinforced Polymer (CFRP) Strips. *ACI Structural Journal* 117(2):185-198.

[8] Alotaibi N, Ghannoum WM, Jirsa JO (2019) Shear Behavior of Full-Scale Reinforced Concrete Members Strengthened with Anchored Carbon Fiber-Reinforced Polymer Strips. *ACI Structural Journal* 116(6):227-240.

[9] Shekarchi W, Ghannoum WM, Jirsa JO (2018) Use of Anchored CFRP Strips for Shear Strengthening of Large Girders. *ACI Structural Journal* 115(1):281-291.

[10] Kim Y, Ghannoum WM, Jirsa JO (2015) Shear Behavior of Full-Scale Reinforced Concrete T-Beams Strengthened using CFRP Strips and Anchors. *Construction and Building Materials* 94:1-9. https://doi.org/10.1016/j.conbuildmat.2015.06.005

[11] Del Rey Castillo E, Allen T, Henry R, Griffith M, Ingham J (2019) Digital image correlation (DIC) for measurement of strains and displacements in coarse, low volume-fraction FRP composites used in civil infrastructure. *Composite Structures* 212:43-57. https://doi.org/https://doi.org/10.1016/j.compstruct.2019.01.024

[12] Cortez Flores IA, Fernández Gómez J, Villanueva Llauradó P (2019) Influence of multiple anchor arrangement in the behaviour of FRP-to-concrete anchored joints. *Composite Structures* 230:111528. https://doi.org/https://doi.org/10.1016/j.compstruct.2019.111528

[13] Ghannoum WM, Alotaibi N, Garcia J, Kim C, Kim Y, Pudleiner DK, Quinn K, Satrom CN, Shekarchi W, Sun S, Wang H, Jirsa JO (2018) Shear Strengthening of Concrete Bridges using CFRP Strips and Anchors and Quality Control Procedures. *ACI Special Publication* 327:43.41-43.20.

[14] Kim Y (2011) Shear behavior of reinforced concrete T-beams strengthened with carbon fiber reinforced polymer (CFRP) sheets and CFRP anchors. (University of Texas, Austin, Tex.). Available at https://repositories.lib.utexas.edu/bitstream/handle/2152/ETD-UT-2011-12-4398/KIM-DISSERTATION.pdf.

[15] Kim Y, Quinn K, Ghannoum WM, Jirsa JO (2014) Strengthening of Reinforced Concrete T-Beams Using Anchored CFRP Materials. *ACI Structural Journal* 111(5):1027-1036.

[16] Breña SF , McGuirk GN (2013) Advances on the behavior characterization of FRP-anchored Carbon Fiber-Reinforced Polymer (CFRP) sheets used to strengthen concrete elements. *International Journal of Concrete Structures and Materials* 7(1):3-16.

[17] Pham LT (2009) Development of a Quality Control Test for Carbon Fiber Reinforced Polymer Anchors. Master's Thesis. (University of Texas at Austin, Austin, TX). Available at https://fsel.engr.utexas.edu/pdfs/Le%20Pham%20-%20Thesis%20-%202009.pdf.

[18] Shekarchi W, Pudleiner DK, Alotaibi N, Ghannoum WM, Jirsa JO (2020) Carbon Fiber Reinforced Polymer Spike Anchor Design Recommendations. *ACI Structural Journal* 117(6):171-182.

[19] Kobayashi K, Fujil S, Yabe Y, Tsukagoshi H, Sugiyama T (2001) Advanced wrapping system with CF-anchor–Stress transfer mechanism of CF-anchor. *FRPRCS-5: Fibre-reinforced plastics for reinforced concrete structures Volume 1: Proceedings of the fifth international conference on fibre-reinforced plastics for reinforced concrete structures, Cambridge, UK, 16–18 July 2001*, (Thomas Telford Publishing), pp 379-388.

[20] Priestley MJN, Seible F, Calvi GM (1996) *Seismic Design and Retrofit of Bridges* (John Wiley and Sons, Inc., New York).

[21] Suselo A (2021) Simulated Behavior of Rectangular Reinforced Concrete Columns Under Seismic Loading. PhD Disseration Thesis. (University of Texas at San Antonio, San Antonio, TX). Available at https://login.libweb.lib.utsa.edu/login?url=https://www.proquest.com/dissertations-theses/simulated-behavior-rectangular-reinforced/docview/2572569963/se-2.

[22] Mander TJ , Matamoros AB (2019) Constitutive Modeling and Overstrength Factors for Reinforcing Steel. *ACI Structural Journal* 116(3). https://doi.org/10.14359/51713320

[23] Cho JY , Pincheira JA (2006) Inelastic Analysis of Reinforced Concrete Columns with Short Lap Splices Subjected to Reversed Cyclic Loads. *ACI Structural Journal* 103(2):280-290.

[24] Jirsa JO, Ghannoum WM, Kim C, Sun W, Shekarchi W, Alotaibi N, Pudleiner DK, Zhu J, Liu S, Wang H (2017) Use of Carbon Fiber Reinforced Polymer (CFRP) with CFRP Anchors for Shear-Strengthening and Design Recommendations/Quality Control Procedures for CFRP Anchors. (Center for Transportation Research (CTR)), FHWA/TX-16/0-6783-1, March.

[25] Mander JB, Priestley MJN, Park R (1988) Theoretical Stress-Strain Model for Confined Concrete. *Journal of Structural Engineering* 114(8):1804-1826.

[26] Lam L , Teng JG (2003) Design-oriented stress–strain model for FRP-confined concrete. *Construction and building materials* 17(6-7):471-489.

[27] Lam L , Teng J (2003) Design-oriented stress-strain model for FRP-confined concrete in rectangular columns. *Journal of reinforced plastics and composites* 22(13):1149-1186.

[28] Brena SF, Ghannoum WM, Kim I, Sattar S, Dukes J (2024) Development of Nonlinear Seismic Modeling Parameters for Drift and Flexural Capacity of FRP Jacketed Concrete Columns. *18th World Conference on Earthquake Engineering*, (International Association for Earthquake Engineering), pp 1-12.

Example Applications

This section is not a part of the Guidelines but contains examples that illustrate the applications of the Guidelines' recommendations. Two examples are presented to demonstrate the use of design provisions for FRP retrofit of concrete columns. The examples make use of a 48 in. × 16 in. [1219 mm × 406 mm] column section that was selected from a pre-1970 building in northern California and adjusted to better illustrate Guidelines' provisions for various deficiencies. The selected column has inadequate lap-splicing of the longitudinal bars and widely spaced transverse reinforcement. In its existing condition, column shear strength controls the lateral behavior in the transverse direction (Example 1), while the degradation of the short lap splices controls behavior in the longitudinal direction (Example 2). Existing column deficiencies and behaviors were determined per ACI 369.1-22 and are summarized in this section. The details of the assessment of the existing column are not in the scope of this section. An FRP retrofit system, including FRP jacket and anchors, is provided to mitigate column deficiencies and improve the lateral performance from brittle shear- or lap splice-controlled behavior to ductile flexure-controlled behavior based on the requirements in these Guidelines.

Example 1: 48 in. × 16 in. [1219 mm × 406 mm] Column with Shear Force Acting in Transverse (Y) Direction

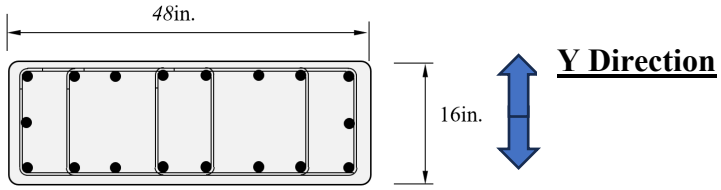

b= 48 in. [1219 mm] h= 16 in. [406 mm] (18) # 9 bars

Column Properties

No. 4 transverse reinforcement @8 in. [203 mm] on center

Expected concrete compressive strength and steel yield strength:

$f'_{c_exp} = 4.5\ ksi\ [31\ MPa]$ $f_{ylE} = 66\ ksi\ [455\ MPa]$

Splice length at base of column:

$l_s = 24d_b = 27.1\ in.[668\ mm]$

Clear height of column: $H_{clr} = 16\ ft\ [4877\ mm]$

Effective section depth in Y-direction: d=13.5 in. [343 mm]

Expected concrete modulus of elasticity per 19.2.2 in ACI 318-19:$E_c = 3{,}824\ ksi$ [26,370 MPa]

Gross moment of inertia of section in Y- direction: $I_g = \frac{bh^3}{12} = 1.638 \times 10^4\ in.^4$ [$6{,}817 \times 10^6$ mm^4]

Compressive axial force: $N_{UD} = 525\ kip\ [2335\ kN]$

$\frac{N_{UD}}{A_g f'_{c_exp}} = 0.152$, with A_g = gross section area

Existing Column Stregnth and Deformation Capacities per ACI 369.1-22; in Y-Direction

Yield moment strength: $M_{Cy_Existing} = 733$ kip-ft [994 kN-m] at N_{UD} with unconfined concrete

Shear strength: $V_{colOL_Existing} = 71$ kip [316 kN]

End moments corresponding to shear strength of column:

$M_{Vcol0_exiting} = \frac{V_{col0_L} H_{clr}}{2} = 567.9 kip-ft\ [782\ kN-m]$ < $M_{Cy_Existing} = 733$ kip-ft [994 kN-m]

Note: while splices are deficient as well in the transverse direction, shear strength governs the lateral strength of the column over the flexural strength from the deficient splices. Therefore, shear degradation is expected prior to splice degradation. As a result, the column is controlled by shear in the Y-direction. The FRP-retrofit system is designed to eliminate the shear deficiency found in this column.

Modeling Parameters of the existing column in Y-direction per ACI 369.1-22

$a_{nl_Existing} = 0$, $b_{nl_Existing} = 0.047$

Properties of FRP Retrofit System

Assume five layers of 0.04 in. [1 mm] thick carbon fiber reinforced polymers (CFRP).

$N = 5 \qquad t_f = 0.04\ in.\ [1\ mm]$

Modulus of elasticity of CFRP laminate (including binding resin):$E_c = 8{,}925\ ksi\ [61357\ MPa]$

Continuous Application: $w_f = s_f$

6.2.4.1 Straight Bar Development in Tension

Check the development length requirement for the retrofitted column.

$C_b = 2.5\ in\ [64\ mm]\ \ d_b = 1.128\ in.\ [29\ mm]$

$n_{bar} = 8 \qquad K_{tr} = \frac{40A_{tr}}{n_{bar}s} = 0.825\ in.\ [21\ mm]$

$A_f = 2Nt_f = 0.4\ in.\ [10\ mm]$

$\frac{l_s}{d_b} \geq 20, \qquad K_{tr_{frp}} = \frac{0.002A_fE_f}{1500n_s} = 0.595\ in.\ [15\ mm]$

Only applies if FRP anchorage is provided per 6.3.4.2 – will verify later

$$\frac{C_b + K_{tr} + K_{tr_frp}}{d_b} = 3.475$$

$l_{b_frp} = \frac{3}{40}\frac{f_{ylE}}{\sqrt{f'_{c_exp}}}\frac{1}{\min\left(\frac{C_b+K_{tr}+K_{tr_{frp}}}{d_b}, 3.5\right)}d_b = 23.78\ in.\ [604\ mm]$ less than l_s provided.

Per 6.2.4.1 and ACI 369.1 3.5.1, the spliced bars confined by the FRP system are deemed to be capable of developing their expected yield strength even though the l_s provided is shorter than the splice length required by ACI 318-19.

6.2.3 Shear Strength of FRP-Jacketed Columns

$V_{col0L} = 70.99\ kip\ [316\ kN]$

$V_{fL} = A_{fv}f_e\frac{d_{fv}}{s_f} = 228.5\ kip\ [1016\ kN]$ Additional shear strength provided by the jacket

$V_{CL} = 0.75\min\left[\left(V_{col0L} + 0.95V_{fL}\right), 10\lambda\sqrt{f'_{cL}}b_wd\right] = 216.0\ kip[961\ kN]$: Total shear strength of the retrofitted column

6.1.2 Shear Strengthening Design Requirements

$M_{CE} = 902.42$ kip-ft [1223 kN-m]: Peak expected moment strength of the FRP jacketed column considering confinement effect at N_{UD}

$V_{UF} = \frac{2M_{CE}}{H_{clr}} = 112.80\ kip\ [502\ kN]$: Shear demand is less than V_{CL} and satisfies 6.1.2.2.

6.3.4.2 Anchors Resisting Out-of-Plane Actions

Requirements:

Maximum anchor spacing along section b_j: lesser of 14 in. [356 mm] and twice longitudinal bar spacing

Maximum anchor spacing along column span: lesser of 12 in. [305 mm] and w_{anc}+4 in. [102 mm]

Selected anchor spacing along section: twice bar spacing < 14in. [356 mm]

Selected anchor spacing along span: 9 in. [229 mm]

Total anchors along splice length = 3x3=9 anchors each face. $n_{ancsp} = 9$

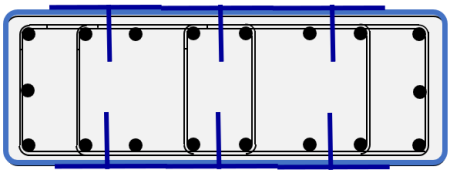

$A_{sface} = 8\ in^2$ [5,161 mm²] $A_v = 1.32\ in^2$ [852 mm²] $w_{fsp} = l_s = 27\ in.$ [688 mm]

$$A_{anc_splice_min} = max\left[0.2\ , \frac{1}{(0.003E_f)n_{ancsp}}\left(\frac{1.25A_{sface}f_{ylE}}{1.4} - 2w_{fsp}Nt_f(0.003E_f) - \frac{A_v f_{ytE} l_s}{s}\right)\right] = 0.2\ in^2 [129\ \text{mm}^2]$$

The minimum cross-sectional area of individual anchor should be: 0.2 in² [129 mm²] < 1.2 in² [774 mm²] OK. (5.3.1.4)

Anchors detailed this way and with area of at least 0.2 in² [129 mm²] therefore satisfy 6.3.4.2.2 and K_{tr_FRP} calculated above is valid.

5.3 Anchor Detailing Minimum Requirements

5.3.1.2 The dry fiber weight for a unit length of anchor λ_{anc}

$\lambda_{anc_min} \geq \frac{A_{anc_splice_min}\gamma_{compf}}{t_f} = 0.073\,\frac{oz}{in}\,[0.081\ \mathrm{g/mm}]$

5.3.1.10 Selected splay length for a radial splay anchor for out-of-plane action = $7\ \mathrm{in.}\ [178\ \mathrm{mm}]$ $> 0.5S_{Ancl}$ and $> 0.5S_{Anct}$ OK.

5.3.1.11 The selected splay length is smaller than the spacing between anchors, S_{Ancl} in the longitudinal and transverse directions of laminate fiber.

5.3.1.3 Width of FRP laminate anchored $w_{anc} = 9\ \mathrm{in}\ [229\ \mathrm{mm}]$ < 10 in. [254 mm] OK.

5.3.1.8 Overlap anchors > 0.5in. [13 mm] along column span

5.3.2.1 Anchor hole radius: d_h=1/2 in. + 1/8 in. =5/8 in. [13 mm + 3 mm = 16 mm]

5.3.2.2 Anchor hole edge radius: r_h=0.7* (5/8 in.) = 0.525 in. [0.7 x 16 mm = 13 mm]

5.3.1.14 Embedment depth: 8 in. [203 mm]

5.3.1.12 Anchor patch design since anchor fan is sandwiched between FRP laminates, only one patch is required with fibers oriented perpendicular to the laminates being anchored.

Dimensions of patch selected to satisfy 5.3.1.12

Table 6.5.1.3 Nonlinear Modeling Parameters

$N_{anch_h} = 0 \quad N_{anch_b} = 3 \quad R_{edge} = 2\ in.\,[51\ mm]$

$\rho_{ft_rec} = \frac{2Nt_f}{b}\frac{w_f}{s_f} = 0.00833$ transverse reinforcement ratio of FRP jacket

$h_j = \frac{h-2R_{edge}}{N_{anc_h}+1} = 12\ in.\,[305\ mm] b_j = \frac{b-2R_{edge}}{N_{anc_b}+1} = 11\ in.\,[279\ mm]$ spacing between transverse anchorage points

$\frac{A_{eff}}{A_g} = min.\left[1 - \frac{\left[\left(N_{anc_h}+1\right)h_j^2+\left(N_{anc_b}+1\right)b_j^2\right]}{3bh}, 0.9\right] = 0.727$ cross section confinement effectiveness

Modeling parameters:

$$d_{nl} = \left[0.034 - 0.06\left(\frac{N_{UD}}{A_g f_{cE}^{'}}\right)^2 + 0.2\frac{\left(\rho_t f_{yt} + 0.004E_f\rho_{ft}\right)\left(\frac{A_{eff}}{A_g}\right)^2}{f_{cE}^{'}}, 0.07\right] = 0.05$$

$e_{nl} = d_{nl} = 0.06$

$c_{nl} = 0.2$

$$E_{eff} = E_c min\left[0.7, max\left[0.3 + \left(\frac{N_{UD}}{A_g f_{cE}^{'}} - 1\right), 0.1\right]\right] = 1{,}346\ ksi\ [9281\ MPa]$$

$\theta_y = \frac{M_{CY}H_{clr}}{6E_{eff}I_g} = 0.014$ yield rotation

$M_{CY} = 812.2\ kip - ft$ yield moment [1101 kN-m]

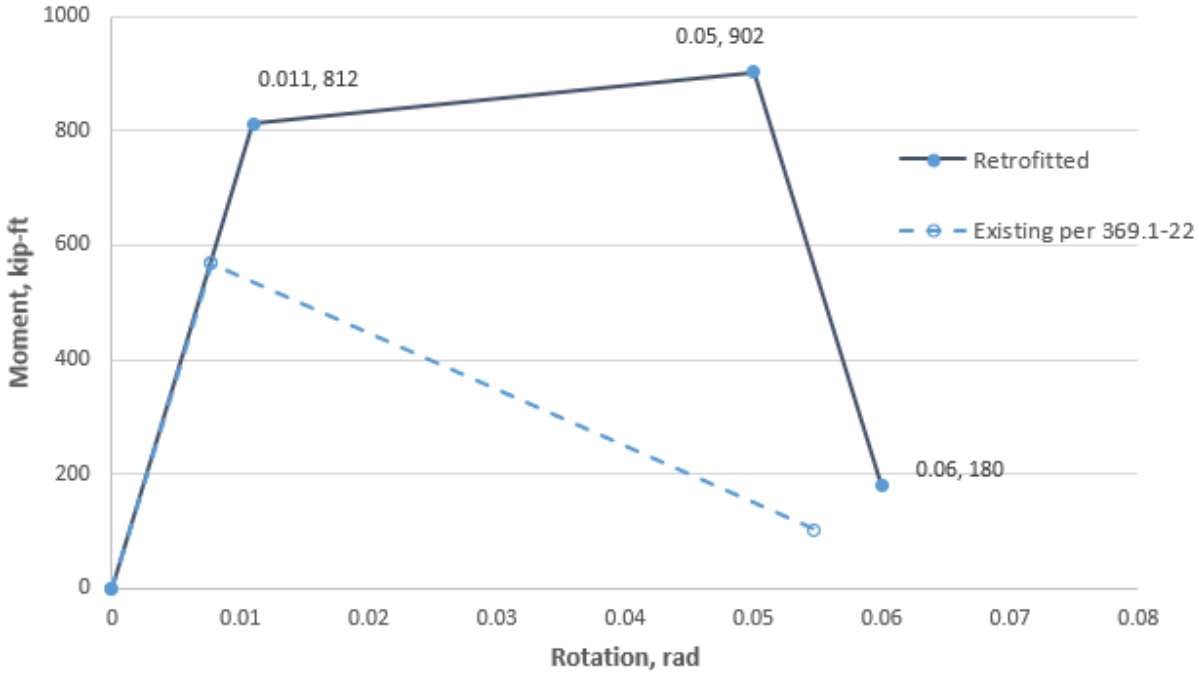

Backbone Curves of Existing vs Retrofitted Column
(Existing column strength controlled by shear strength)

Table 6.4.2.1 m- factors

Effective yield rotation for m factor calculation.

$$\theta_{yE} = max\left[\frac{M_{CY}H_{clr}}{6E_{eff}I_g}, 0.008\right] = 0.014$$

IO m-factor

$$m_{IO} = min\left[\frac{3}{8}\left(\frac{d_{nl}}{\theta_{yE}}\right), 2\right] = 1.32$$

Primary m-factors

$$m_{LS} = \frac{9}{16}\left(\frac{d_{nl}}{\theta_{yE}}\right) = 1.98 \qquad m_{CP} = \frac{9}{16}\left(\frac{e_{nl}}{\theta_{yE}}\right) = 2.37$$

Secondary m-factors

$$m_{LS_2nd} = \frac{9}{16}\left(\frac{e_{nl}}{\theta_{yE}}\right) = 2.37 \qquad m_{CP_2nd} = \frac{3}{4}\left(\frac{e_{nl}}{\theta_{yE}}\right) = 3.16$$

Example 2: 16 in. × 48 in. [406 mm × 1219 mm] Column with Shear Force Acting in Longituidnal (X) Direction

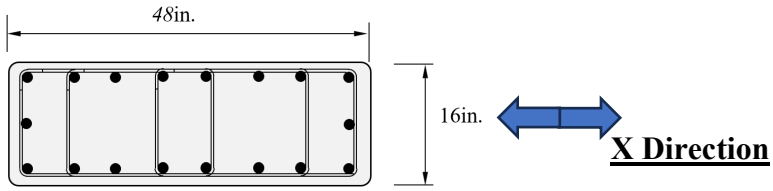

Section Properties of RC column

b= 16 in. [406 mm] h= 48in. [1,219 mm] (18) # 9 bars

No. 4 transverse reinforcement @8 in. [203 mm] O.C.

$f'_{c_exp} = 4.5\ ksi\ [31\ MPa]$ $f_{ylE} = 66\ ksi\ [455\ MPa]$

$l_s = 24d_b = 27.1\ in.[668\ mm]$

Clear height of the column:: $H_{clr} = 16\ ft\ [4877\ mm]$

Effective section depth in X-direction: d=13.5 in. [1156 mm]

Expected concrete modulus of elasticity per 19.2.2 in ACI 318-19: $E_c = 3{,}824\ ksi\ [26370 MPa]$

$I_g = \frac{bh^3}{12} = 1.475 \times 10^5\ in^4\ [6139\ \times 10^7\ mm^4]$

Compressive axial force: $N_{UD} = 525\ kip\ [23356\ [kN]]$

$\frac{N_{UD}}{A_g f'_{c_exp}} = 0.152$, with A_g = gross section area

Existing Column Strengths and Deformation Capacities per ACI 369.1-22; in X-Direction

Yield moment strength: $M_{Cy_Existing} = 1{,}952$ kip-ft [2646 kN-m] at N_{UD} with unconfined concrete

Shear strength: $V_{colOL_Existing} = 244.9$ kip [1089 kN]

End moments corresponding to shear strength of column:

$M_{Vcol0_exiting} = \frac{V_{colOL} H_{clr}}{2} = 1{,}959\ kip - ft\ [2652\ kN - m]$ > $M_{Cy_Existing} = 1{,}952\ kip - ft\ [2646\ kN - m]$

Since splice length is not sufficient to yield longitudinal bars (per ACI 36.1-22) the columns are controlled by inadequate lap splice

Modeling Parameters of the existing column in X-direction per ACI 369.1-22

$a_{nl_Existing} = 0.018,\ \ b_{nl_Existing} = 0.04$

Properties of FRP Retrofit System

Assume five layers of 0.04 in. thick fibers Carbon fiber reinforced polymers.

$N = 5 \qquad t_f = 0.04\ in\ [1\ mm]\ \ E_f = 8{,}925\ ksi\ [61357\ MPa]$

Continuous Application: $w_f = s_f$

6.2.4.1 Straight Bar Development in Tension

Check the development length requirement for the retrofitted column.

$C_b = 2.5\ in.\ [64\ mm]\ \ d_b = 1.128\ in.\ [29\ mm]$

$n_{bar} = 3 \qquad K_{tr} = \frac{40A_{tr}}{n_{bar}s} = 0.733\ in.\ [19\ mm]$

$$A_f = 2Nt_f = 0.4\ in.\ [10\ mm]$$

$\frac{l_s}{d_b} \geq 20, \qquad K_{tr_{frp}} = \frac{0.002A_fE_f}{1500n_s} = 1.587\ in.\ [40\ mm]$

$l_{b_frp} = \frac{3}{40}\frac{f_{ylE}}{\sqrt{f'_{c_exp}}}\frac{1}{\min\left(\frac{C_b + K_{tr} + K_{tr_{frp}}}{d_b}, 3.5\right)}d_b = 23.78\ in.\ [604\ mm]$ less than l_s provided.

Per 6.2.4.1 and ACI 369.1 3.5.1, the spliced bars confined by the FRP system are deemed to be capable of developing their expected yield strength even though the l_s provided is shorter than the splice length required by ACI 318-19.

6.2.3 Shear Strength of FRP-Jacketed Columns

$V_{col0L} = 244.9\ kip\ [1089\ kN]$

$V_{fL} = A_{fv}f_e\frac{d_{fv}}{s_f} = 685.4\ kip\ [3409\ kN]$ Additional shear strength provided by the jacket

$V_{CL} = 0.75 \min\left[\left(V_{col0L} + 0.95V_{fL}\right), 10\lambda\sqrt{f_{cL}^{'}}b_w d\right] = 299.1\ kip\ [1330\ kN]$:Total shear strength of the retrofitted column

6.1.2 Shear Strengthening Design Requirements

$M_{CE} = 2{,}293$ kip-ft [3109 kN-m] : Peak expected moment strength of the FRP jacketed column considering confinement effect at N_{UD}

$V_{UF} = \frac{2M_{CE}}{H_{clr}} = 286.6\ kip\ [1275\ kN]$: Shear demand is less than V_{CL} and satisfies 6.1.2.2.

6.1.4.2 Anchors Resisting Out-of-Plane Actions

Anchors are not required for 16 in. side since $b_j = 16 - 2 \times R_{edge} = 12$ in. [305 mm] < 14in. [356 mm] (6.1.4.2.2.1)

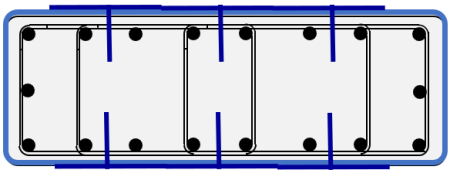

Table 6.5.1.3 Nonlinear Modeling Parameters

$N_{anch_h} = 3 \quad N_{anch_b} = 0 \quad R_{edge} = 2\ in.$ [51 mm]

$\rho_{ft_rec} = \frac{2Nt_f}{b}\frac{w_f}{s_f} = 0.025$ transverse reinforcement ratio of FRP jacket

$h_j = \frac{h-2R_{edge}}{N_{anc_h}+1} = 11\ in.\ [279\ mm]\ b_j = \frac{b-2R_{edge}}{N_{anc_b}+1} = 12\ in.\ [305\ mm]$spacing between transverse anchorage points

$\frac{A_{eff}}{A_g} = min.\left[1 - \frac{\left[\left(N_{anc_h}+1\right)h_j^2+\left(N_{anc_b}+1\right)b_j^2\right]}{3bh}, 0.9\right] = 0.727$ cross section confinement effectiveness

Modeling parameters:

$$d_{nl} = \left[0.034 - 0.06\left(\frac{N_{UD}}{A_g f_{cE}^{'}}\right)^2 + 0.2\frac{\left(\rho_t f_{yt} + 0.004E_f\rho_{ft}\right)\left(\frac{A_{eff}}{A_g}\right)^2}{f_{cE}^{'}}, 0.07\right] = 0.064$$

$e_{nl} = d_{nl} = 0.076$

$c_{nl} = 0.2$

$$E_{eff} = E_c min\left[0.7, max\left[0.3 + \left(\frac{N_{UD}}{A_g f_{cE}^{'}} - 1\right), 0.1\right]\right] = 1346\ ksi\ [9281\ MPa]$$

$\theta_y = \frac{M_{CY} H_{clr}}{6 E_{eff} I_g} = 0.004$ yield rotation

$M_{CY} = 2063\ kip - ft$ yield moment $2797\ kN - m$

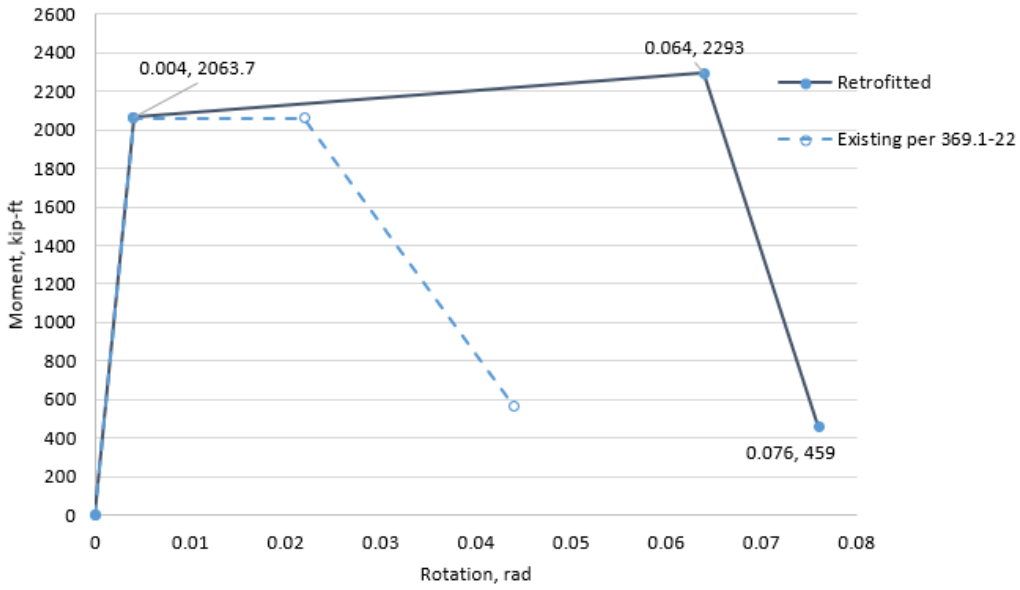

Backbone Curves of Existing vs Retrofitted Column
(Existing column strength controlled by inadequate splice)

Table 6.4.2.1 m- factors

Effective yield rotation for m factor calculation.

$\theta_{yE} = max\left[\frac{M_{CY} H_{clr}}{6 E_{eff} I_g}, 0.008\right] = 0.008$ 0.008 lower bound controls

IO m-factor

$$m_{IO} = min\left[\frac{3}{8}\left(\frac{d_{nl}}{\theta_{yE}}\right), 2\right] = 2$$

Primary m-factors

$$m_{LS} = \frac{9}{16}\left(\frac{d_{nl}}{\theta_{yE}}\right) = 4.48 \qquad m_{CP} = \frac{9}{16}\left(\frac{e_{nl}}{\theta_{yE}}\right) = 5.37$$

Secondary m-factors

$$m_{LS_2nd} = \frac{9}{16}\left(\frac{e_{nl}}{\theta_{yE}}\right) = 5.37 \qquad m_{CP_2nd} = \frac{3}{4}\left(\frac{e_{nl}}{\theta_{yE}}\right) = 7.17$$