NIST Special Publication 1253

Report of the 104th National Conference on Weights and Measures

Milwaukee, Wisconsin – July 14 through 18, 2019
as adopted by the 104th National Conference on Weights and Measures 2019

Editors:
John Barton
Tina Butcher
Richard Harshman
Diane Lee
David Sefcik
Lisa Warfield

Dr. Douglas Olson, Chief
Office of Weights and Measures
Physical Measurement Laboratory

This publication is available free of charge from:
https://doi.org/10.6028/NIST.SP.1253

August 2020

U.S. Department of Commerce
Wilbur L. Ross, Jr., Secretary

National Institute of Standards and Technology
Dr. Walter Copan, NIST Director and Under Secretary of Commerce for Standards and Technology

The National Conference on Weights and Measures is supported by the National Institute of Standards and Technology and is attended by officials from various states, counties, and cities, as well as representatives from the U.S. Government, other nations, industry, and consumer organizations.

This publication is available free of charge from: https://doi.org/10.6028/NIST.SP.1253

Certain commercial entities, equipment, or materials may be identified in this document to describe an experimental procedure or concept adequately. Such identification is not intended to imply recommendation or endorsement by the National Institute of Standards and Technology, nor is it intended to imply that the entities, materials, or equipment are necessarily the best available for the purpose.

Abstract

The 104th Annual Meeting of the National Conference on Weights and Measures (NCWM) was held July 14 - 18, 2019, at the Hyatt Regency Milwaukee Hotel, Milwaukee, Wisconsin. The theme of the meeting was "Assuring Equity in the Marketplace: NIST and NCWM, Partners with a Shared Mission."

Reports by the NCWM Board of Directors, Standing Committees, and Special Purpose Committees constitute the major portion of this publication, along with the addresses delivered by Conference officials and other authorities from government and industry.

Special meetings included those of the Meter Manufacturers Association, Packaging and Labeling Subcommittee, Fuels and Lubricants Subcommittee, Associate Membership Committee, Regional Association Meetings, and the Weigh-in-Motion Task Group.

Key words: laws and regulations; legal metrology; meters; scales; specifications and tolerances; training; type evaluation; uniform laws; weights and measures.

Note: The policy of the National Institute of Standards and Technology is to use units of International System of Units (SI) in all its publications. In this publication, however, recommendations received by the NCWM technical committees have been printed as they were submitted, and, therefore, may contain references to units of the metric system where such units are commonly used in industry practice. Opinions expressed in non-NIST papers are those of the authors and not necessarily those of the National Institute of Standards and Technology. Non-NIST speakers are solely responsible for the content and quality of their material.

National Institute of Standards and Technology Special Publication 1253
Natl. Inst. Stand. Technol. Spec. Pub. 1253, 682 pages (August 2020)
https://doi.org/10.6028/NIST.SP.1253
CODEN: NSPUE2

WASHINGTON: 2020

National Conference on Weights and Measures

Annual Report of the 104th NCWM

Table of Contents

This publication is available free of charge from: https://doi.org/10.6028/NIST.SP.1253

This publication is available free of charge from: https://doi.org/10.6028/NIST.SP.1253

This publication is available free of charge from: https://doi.org/10.6028/NIST.SP.1253

Past Chairmen of the Conference

Conference	Year	Location	Chairman
1st	1905	Washington, D.C.	Dr. S.W. Stratton, Bureau of Standards
2nd	1906	Washington, D.C.	Dr. S.W. Stratton, Bureau of Standards
3rd	1907	Washington, D.C.	Dr. S.W. Stratton, Bureau of Standards
4th	1908	Washington, D.C.	Dr. S.W. Stratton, Bureau of Standards
	1909	Conference Was Not Held	
5th	1910	Washington, D.C.	Dr. S.W. Stratton, Bureau of Standards
6th	1911	Washington, D.C.	Dr. S.W. Stratton, Bureau of Standards
7th	1912	Washington, D.C.	Dr. S.W. Stratton, Bureau of Standards
8th	1913	Washington, D.C.	Dr. S.W. Stratton, Bureau of Standards
9th	1914	Washington, D.C.	Dr. S.W. Stratton, Bureau of Standards
10th	1915	Washington, D.C.	Dr. S.W. Stratton, Bureau of Standards
11th	1916	Washington, D.C.	Dr. S.W. Stratton, Bureau of Standards
	1917	Conference Was Not Held	
	1918	Conference Was Not Held	
12th	1919	Washington, D.C.	Dr. S.W. Stratton, Bureau of Standards
13th	1920	Washington, D.C.	Dr. S.W. Stratton, Bureau of Standards
14th	1921	Washington, D.C.	Dr. S.W. Stratton, Bureau of Standards
15th	1922	Washington, D.C.	Dr. S.W. Stratton, Bureau of Standards
16th	1923	Washington, D.C.	Dr. George Burgess, Bureau of Standards
17th	1924	Washington, D.C.	Dr. George Burgess, Bureau of Standards
18th	1925	Washington, D.C.	Dr. George Burgess, Bureau of Standards
19th	1926	Washington, D.C.	Dr. George Burgess, Bureau of Standards
20th	1927	Washington, D.C.	Dr. George Burgess, Bureau of Standards
21st	1928	Washington, D.C.	Dr. George Burgess, Bureau of Standards
22nd	1929	Washington, D.C.	Dr. George Burgess, Bureau of Standards
23rd	1930	Washington, D.C.	Dr. George Burgess, Bureau of Standards
24th	1931	Washington, D.C.	Dr. George Burgess, Bureau of Standards
	1932	Conference Was Not Held	
	1933	Conference Was Not Held	
	1934	Conference Was Not Held	
25th	1935	Washington, D.C.	Dr. Lyman Briggs, National Bureau of Standards
26th	1936	Washington, D.C.	Dr. Lyman Briggs, National Bureau of Standards
27th	1937	Washington, D.C.	Dr. Lyman Briggs, National Bureau of Standards
28th	1938	Washington, D.C.	Dr. Lyman Briggs, National Bureau of Standards
29th	1939	Washington, D.C.	Dr. Lyman Briggs, National Bureau of Standards

Conference	Year	Location	Chairman
30th	1940	Washington, D.C.	Dr. Lyman Briggs, National Bureau of Standards
31st	1941	Washington, D.C.	Dr. Lyman Briggs, National Bureau of Standards
	1942	Conference Was Not Held	
	1943	Conference Was Not Held	
	1944	Conference Was Not Held	
	1945	Conference Was Not Held	
32nd	1946	Washington, D.C.	Dr. E.U. Condon, National Bureau of Standards
33rd	1947	Washington, D.C.	Dr. E.U. Condon, National Bureau of Standards
	1948	Conference Was Not Held	
34th	1949	Washington, D.C.	Dr. E.U. Condon, National Bureau of Standards
35th	1950	Washington, D.C.	Dr. E.U. Condon, National Bureau of Standards
36th	1951	Washington, D.C.	Dr. E.U. Condon, National Bureau of Standards
37th	1952	Washington, D.C.	Dr. A.V. Astin, National Bureau of Standards
38th	1953	Washington, D.C.	Dr. A.V. Astin, National Bureau of Standards
39th	1954	Washington, D.C.	Dr. A.V. Astin, National Bureau of Standards
40th	1955	Washington, D.C.	Dr. A.V. Astin, National Bureau of Standards
41st	1956	Washington, D.C.	Dr. A.V. Astin, National Bureau of Standards
42nd	1957	Washington, D.C.	Dr. A.V. Astin, National Bureau of Standards
43rd	1958	Washington, D.C.	J.P. McBride, MA
44th	1959	Washington, D.C.	C.M. Fuller, CA
45th	1960	Washington, D.C.	H.E. Crawford, FL
46th	1961	Washington, D.C.	R.E. Meek, IN
47th	1962	Washington, D.C.	Robert Williams, NY
48th	1963	Washington, D.C.	C.H. Stender, SC
49th	1964	Washington, D.C.	D.M. Turnbull, WA
50th	1965	Washington, D.C	V.D. Campbell, OH
51st	1966	Denver, CO	J.F. True, KS
52nd	1967	Washington, D.C.	J.E. Bowen, MA
53rd	1968	Washington, D.C.	C.C. Morgan, IN
54th	1969	Washington, D.C.	S.H. Christie, NJ
55th	1970	Salt Lake City, UT	R.W. Searles, OH
56th	1971	Washington, D.C.	M. Jennings, TN
57th	1972	Washington, D.C.	E.H. Black, CA
58th	1973	Minneapolis, MN	George Johnson, KY
59th	1974	Washington, D.C.	John Lewis, WA
60th	1975	San Diego, CA	Sydney Andrews, FL
61st	1976	Washington, D.C.	Richard Thompson, MD
62nd	1977	Dallas, TX	Earl Prideaux, CO

This publication is available free of charge from: https://doi.org/10.6028/NIST.SP.1253

Conference	Year	Location	Chairman
63rd	1978	Washington, D.C.	James Lyles, VA
64th	1979	Portland, OR	Kendrick Simila, OR
65th	1980	Washington, D.C.	Charles Vincent, TX
66th	1981	St. Louis, MO	Edward Stadolnik, MA
67th	1982	Atlanta, GA	Edward Heffron, MI
68th	1983	Sacramento, CA	Charles Greene, NM
69th	1984	Boston, MA	Sam Hindsman, AR
70th	1985	Washington, D.C.	Ezio Delfino, CA
71st	1986	Albuquerque, NM	George Mattimoe, HI
72nd	1987	Little Rock, AR	Frank Nagele, MI
73rd	1988	Grand Rapids, MI	Darrell Guensler, CA
74th	1989	Seattle, WA	John Bartfai, NY
75th	1990	Washington, D.C.	Fred Gerk, NM
76th	1991	Philadelphia, PA	N. David Smith, NC
77th	1992	Nashville, TN	Sidney Colbrook, IL
78th	1993	Kansas City, MO	Allan Nelson, CT
79th	1994	San Diego, CA	Thomas Geiler, MA
80th	1995	Portland, ME	James Truex, OH
81st	1996	New Orleans, LA	Charles Gardner, NY
82nd	1997	Chicago, IL	Barbara Bloch, CA
83rd	1998	Portland, OR	Steven Malone, NE
84th	1999	Burlington, VT	Aves Thompson, AK
85th	2000	Richmond, VA	Wes Diggs, VA
86th	2001	Washington, D.C.	Louis Straub, MD
87th	2002	Cincinnati, OH	Ronald Murdock, NC
88th	2003	Sparks, NV	Ross Andersen, NY
89th	2004	Pittsburgh, PA	Dennis Ehrhart, AZ
90th	2005	Orlando, FL	Wes Diggs, VA
91st	2006	Chicago, IL	Don Onwiler, NE
92nd	2007	Salt Lake City, UT	Michael Cleary, CA
93rd	2008	Burlington, VT	Judy Cardin, WI
94th	2009	San Antonio, TX	Jack Kane, MT
95th	2010	St. Paul, MN	Randy Jennings, TN
96th	2011	Missoula, MT	Tim Tyson, KS
97th	2012	Portland, ME	Kurt Floren, CA
98th	2013	Louisville, KY	Stephen Benjamin, NC
99th	2014	Detroit, MI	John Gaccione, NY
100th	2015	Philadelphia, PA	Ronald Hayes, MO

This publication is available free of charge from: https://doi.org/10.6028/NIST.SP.1253

Conference	Year	Location	Chairman
101st	2016	Denver, CO	Jerry Buendel, WA
102nd	2017	Pittsburgh, PA	Kristin Macey, CA
103rd	2018	Tulsa, OK	James Cassidy, MA
104th	2019	Milwaukee, WI	Brett Gurney, UT

This publication is available free of charge from: https://doi.org/10.6028/NIST.SP.1253

This publication is available free of charge from: https://doi.org/10.6028/NIST.SP.1253

2018 - 2019 Organizational Chart

NCWM Board of Directors

Office	Name	Affiliation	Term Ends
Chairman	Brett Gurney	Utah	2019
Chairman-Elect	Craig VanBuren	Michigan	2019
Immediate Past Chair	James Cassidy	Massachusetts	2019
Treasurer	Raymond Johnson	New Mexico	2020
Active Membership - Northeastern	Jack Walsh	Town of Wellesley, Massachusetts	2019
Active Membership - Central	Ivan Hankins	Iowa	2020
Active Membership - Western	Mahesh Albuquerque	Colorado	2022
Active Membership - Southern	Hal Prince	Florida	2023
At-Large	Julie Quinn	Minnesota	2021
At-Large	Rebecca Richardson	MARC-IV Consulting	2023
Associate Membership Rep.	Christopher Guay	Procter and Gamble, Co.	2019
Honorary NCWM President	Dr. Walter G. Copan	NIST Director	NA
Executive Director	Don Onwiler	NCWM	NA
Executive Secretary	Dr. Douglas Olson	NIST, Office of Weights and Measures	NA
NTEP Administrator	Darrell Flocken	NCWM	NA
Measurement Canada Advisor	Carl Cotton	Measurement Canada	NA

National Type Evaluation Program Committee (NTEP)

Office	Name	Affiliation	Term Ends
Committee Chair	James Cassidy	Massachusetts	2019
NEWMA Representative	Jack Walsh	Town of Wellesley, Massachusetts	2019
SWMA Representative	Hal Prince	Florida	2019
Upcoming Committee Chair	Brett Gurney	Utah	2020
Upcoming Committee Chair	Craig VanBuren	Michigan	2021
NTEP Administrator	Darrell Flocken	NCWM	NA

Finance Committee

Office	Name	Affiliation	Term Ends
Committee Chair	Craig VanBuren	Michigan	2019
Nominated Chair-Elect	Hal Prince	Florida	2020
Treasurer	Raymond Johnson	New Mexico	2020
Associate Membership Rep.	Christopher Guay	Procter and Gamble, Co.	2019
Executive Director	Don Onwiler	NCWM	NA

This publication is available free of charge from: https://doi.org/10.6028/NIST.SP.1253

Laws and Regulations Committee (L&R)

Office	Name	Affiliation	Term Ends
Committee Chair	Michelle Wilson	Arizona	2019
Member	Ethan Bogren	Westchester County, New York	2020
Member	Joel Maddux	Virginia	2021
Member	John McGuire	New Jersey	2022
Member	Doug Rathbun	Illinois	2023
Associate Membership Representative	Prentiss Searles	American Petroleum Institute	2023
Canadian Technical Advisor	Lance Robertson	Measurement Canada	NA
NIST Technical Advisor	David Sefcik	NIST, Office of Weights and Measures	NA
NIST Technical Advisor	Lisa Warfield	NIST, Office of Weights and Measures	NA

Professional Development Committee (PDC)

Office	Name	Affiliation	Term Ends
Committee Chair	Gene Robertson	Mississippi	2019
Member	Marc Paquette	Vermont	2020
Member	Marco Mares	San Diego County, California	2021
Member	Brenda Sharkey	South Dakota	2022
Member	Scott Ferguson	Michigan	2023
Associate Membership Rep.	James Pettinato	FMC Technologies Measurement Solutions, Inc.	2023
Safety Liaison	Julie Quinn	Minnesota	NA
NIST Liaison	Tina Butcher	NIST, Office of Weights and Measures	NA
Certification Coordinator	Ross Andersen	Retired	NA
Certification Coordinator	Jerry Buendel	Retired	NA

Specifications and Tolerances Committee (S&T)

Office	Name	Affiliation	Term Ends
Committee Chair	Rachelle Miller	Wisconsin	2020
Member	Loren Minnich	Kansas	2019
Member	Josh Nelson	Oregon	2021
Member	Brad Bachelder	Maine	2022
Member	Jason Glass	Kentucky	2023
Canadian Technical Advisor	Luciano Burtini	Measurement Canada	NA
NIST Technical Advisor	TBD	NIST, Office of Weights and Measures	NA
NIST Technical Advisor	Richard Harshman	NIST, Office of Weights and Measures	NA
NTEP Technical Advisor	Darrell Flocken	NCWM	NA

This publication is available free of charge from: https://doi.org/10.6028/NIST.SP.1253

Nominating Committee

Office	Name	Affiliation	Term Ends
Committee Chair	James Cassidy	Massachusetts	2019
Member	Stephen Benjamin	North Carolina	2019
Member	Mark Coyne	City of Brockton, Massachusetts	2019
Member	Steven Harrington	Oregon	2019
Member	Ronald Hayes	Missouri	2019
Member	Kristin Macey	California	2019
Member	Ken Ramsburg	Maryland	2019

Credentials Committee

Office	Name	Affiliation	Term Ends
Committee Chair	Elaine Grillo	City of Boston, Massachusetts	2019
Member	David Aguayo	San Luis Obispo County, California	2020
Member	Stuart Strnad	Texas	2021
Coordinator	Darrell Flocken	NCWM	NA

Appointive Officials

Office	Name	Affiliation	Term Ends
Chaplain	Constantine Cotsoradis	Flint Hills Resources	2019
Parliamentarian	Louis Straub	Fairbanks Scale, Inc.	2019
Presiding Officer	Tim Chesser	Arkansas	2019
Presiding Officer	Doug Musick	Kansas	2019
Presiding Officer	Kevin Schnepp	California	2019
Presiding Officer	Jane Zulkiewicz	Town of Barnstable, Massachusetts	2019
Sergeant-at-Arms	Jacques Daniel	Wisconsin	2019
Sergeant-at-Arms	Greg Loreck	Wisconsin	2019

Associate Membership Committee

Office	Name	Affiliation	Term Ends
Committee Chair	Mark Flint	Archer Daniels Midland (ADM)	2019
Vice-Chair	Bob Wiese	Northwest Tank and Environmental Services	2019
Secretary / Treasurer	Ron Gibson	Seraphin Test Measure	2019
Member	Richard Shipman	Rice Lake Weighing Systems, Inc.	2020
Member	Christopher Guay	Procter and Gamble, Co.	2020

Member	Mark Flint	Archer Daniels Midland (ADM)	2020
Member	Rebecca Richardson	MARC - IV Consulting	2020
Member	Prentiss Searles	American Petroleum Institute	2022
Member	Bob Wiese	Northwest Tank and Environmental Services	2022
Member	David Calix	NCR Corporation	2023
Member	Bob Murnane	Seraphin Test Measure	2023

Packaging and Labeling Subcommittee

Office	Name	Affiliation
Committee Chair	Christopher Guay	Procter and Gamble, Co.
NIST Technical Advisor	David Sefcik	NIST, Office of Weights and Measures
Public Sector - Central	Nicholas Owens	Stark County Weights and Measures, Ohio
Public Sector - Northeastern	Frank Greene	Connecticut
Public Sector - Southern	Hal Prince	Florida
Public Sector - Western	Angela Godwin	Ventura County, California
Private Sector Member	Ann Boeckman	Kraft Food Group, Inc.
Private Sector Member	Krister Hard af Segerstad	IKEA North America Services, LLC
Private Sector Member	Zina Juroch	Pier 1 Imports
Private Sector Member	Heidi Robinson	Publix Super Markets

Fuels and Lubricants Subcommittee

Office	Name	Affiliation
Committee Chair	Bill Striejewske	Nevada
Vice-Chair	Ronald Hayes	Missouri
Vice-Chair	Randy Jennings	Tennessee
Secretary	Kevin Ferrick	American Petroleum Institute
Vice-Secretary	Rebecca Richardson	MARC - IV Consulting
NIST Technical Advisor	David Sefcik	NIST, Office of Weights and Measures
NIST Technical Advisor	Lisa Warfield	NIST, Office of Weights and Measures
Advisory Member	Curtis Williams	Retired
Public Sector Member	Mahesh Albuquerque	Colorado
Public Sector Member	David Au	Georgia
Public Sector Member	Vanessa Benchea	Florida
Public Sector Member	Stephen Benjamin	North Carolina
Public Sector Member	Tim Elliott	Washington
Public Sector Member	Mike Harrington	Iowa
Public Sector Member	John Hayes	Tennessee
Public Sector Member	Lori Jacobson	South Dakota
Public Sector Member	Kristin Macey	California

This publication is available free of charge from: https://doi.org/10.6028/NIST.SP.1253

Public Sector Member	Allan Morrison	California
Public Sector Member	Doug Rathbun	Illinois
Public Sector Member	Karl Scott	Utah
Public Sector Member	Brenda Sharkey	South Dakota
Public Sector Member	Charles Stutesman	Kansas
Public Sector Member	Kevin Upschulte	Missouri
Public Sector Member	Timothy White	Michigan
Public Sector Member	Michelle Wilson	Arizona
Private Sector Member	Holly Alfano	Independent Lubricant Manufacturers Association.
Private Sector Member	Teresa Alleman	National Renewable Energy Laboratory
Private Sector Member	Matt Bjornson	Bjornson Oil Company
Private Sector Member	Chuck Corr	Archer Daniels Midland Company
Private Sector Member	Davis Cosey	Davis Oil Company
Private Sector Member	Kelly Davis	Renewable Fuels Association
Private Sector Member	Scott Fenwick	National Biodiesel Board
Private Sector Member	Rick Fragnito	Shell
Private Sector Member	Jennifer Green	CITGO Petroleum Corporation
Private Sector Member	Philip Guillemette	Flint Hills Resources, LP
Private Sector Member	John Harkins	Energy Transfer
Private Sector Member	Marilyn Herman	Herman and Associates
Private Sector Member	Cal Hodge	A 2nd Opinion, Inc.
Private Sector Member	Jason Holmes	BASF Corporation
Private Sector Member	William Hornbach	Chevron Global Downstream, LLC
Private Sector Member	Joanna Johnson	Automotive Oil Exchange Association
Private Sector Member	Brian Kernke	Loves Travel Stops
Private Sector Member	Stephen Kirby	General Motors
Private Sector Member	David A. Kovach	BP Products
Private Sector Member	Mike Kunselman	Center for Quality Assurance
Private Sector Member	Jeffrey Leiter	Bassman, Mitchell, Alfano & Leiter Chtd.
Private Sector Member	Russ Lewis	Marathon Petroleum, LLC
Private Sector Member	Michael Lynch	ExxonMobil Corporation
Private Sector Member	Scott Mason	Phillips 66
Private Sector Member	Beverly Michels	BP Products
Private Sector Member	Kristi Moore	KMoore Consulting, LLC
Private Sector Member	Manuch Nikanjam	Chevron Global Downstream, LLC
Private Sector Member	Keith Penn	Colonial Pipeline Company
Private Sector Member	Derek Regal	Tesoro Companies, Inc.
Private Sector Member	Jim Rocco	Petroleum Marketers Assoc. of America
Private Sector Member	Prentiss Searles	American Petroleum Institute
Private Sector Member	Matthew Sheehan	Chevron USA, Inc.
Private Sector Member	Dr. Prasad Tumati	Haltermann Solutions

This publication is available free of charge from: https://doi.org/10.6028/NIST.SP.1253

Private Sector Member	Marie Valentine	Toyota - TEMA - TTC
Private Sector Member	Steve Vander Griend	ICM, Inc.
Private Sector Member	Lilla Voros	The Lubrizol Corp.

Promotional Tool Kit Task Group

Office	Name	Affiliation
Chair	Stephen Benjamin	North Carolina
Public Sector Member	Jerry Buendel	Washington
Public Sector Member	Kurt Floren	Los Angeles County, California
Private Sector Member	Bill Callaway	Crompco

Credit Card Skimmer Task Group

Office	Name	Affiliation
Chair	Hal Prince	Florida
Public Sector Member	James Cassidy	Massachusetts
Public Sector Member	Mike Harrington	Iowa
Public Sector Member	Eric Janke	South Dakota
Public Sector Member	Joel Maddux	Virginia
Public Sector Member	John McGuire	New Jersey
Public Sector Member	Mike Sikula	New York
Public Sector Member	Craig VanBuren	Michigan
Public Sector Member	Scott Wagner	Colorado
Public Sector Member	Michelle Wilson	Arizona
Private Sector Member	Paige Anderson	National Association of Convenience Stores
Private Sector Member	Owen DeWitt	FlintLoc Technologies, LLC
Private Sector Member	Randy Moses	Wayne Fueling Systems
Private Sector Member	Brent Price	Gilbarco, Inc.

Safety Subcommittee

Office	Name	Affiliation
Committee Chair	Julie Quinn	Minnesota
Public Sector Member	Jason Flint	New Jersey
Public Sector Member	Georgia Harris	NIST, Office of Weights and Measures
Public Sector Member	Elizabeth Koncki	Maryland
Public Sector Member	Matthew Maiten	Santa Barbara County, California
Public Sector Member	Brenda Sharkey	South Dakota
Public Sector Member	Mike Sikula	New York
Private Sector Member	Sprague Ackley	Honeywell
Private Sector Member	Tisha Arriaga	Marathon Petroleum, LLC

This publication is available free of charge from: https://doi.org/10.6028/NIST.SP.1253

Private Sector Member	Bill Callaway	Crompco
Private Sector Member	Remy Cano	Northwest Tank and Environmental Services, Inc.
Private Sector Member	Brad Fryburger	Southern II Scale
Private Sector Member	Robert LaGasse	Mulch and Soil Council
Private Sector Member	John Lawn	Rinstrum, Inc.
Private Sector Member	Richard Shipman	Rice Lake Weighing Systems, Inc.

Cannabis Task Group

Office	Name	Affiliation
Chair	James Cassidy	Massachusetts
Public Sector Member	Brad Bachelder	Maine
Public Sector Member	Loren Kipp Blauer	Nevada
Public Sector Member	Stacy Carlsen	Marin County, California
Public Sector Member	Tim Chesser	Arkansas
Public Sector Member	Mark Ciociolo	City of Worcester, Massachusetts
Public Sector Member	Fran Elson-Houston	Ohio
Public Sector Member	Jason Flint	New Jersey
Public Sector Member	Kurt Floren	Los Angeles County, California
Public Sector Member	Paul Floyd	Louisiana
Public Sector Member	Hollis Glenn	Colorado
Public Sector Member	Mike Gower	Nevada
Public Sector Member	Gabriel Gowman	Riverside County, California
Public Sector Member	Elaine Grillo	City of Boston, Massachusetts
Public Sector Member	Kevin Grosskreutz	City of Appleton, Wisconsin
Public Sector Member	Ivan Hankins	Iowa
Public Sector Member	Mike Harrington	Iowa
Public Sector Member	Steven Harrington	Oregon
Public Sector Member	Ryanne Hartman	Michigan
Public Sector Member	Kristin Macey	California
Public Sector Member	Mike Mann	Washington
Public Sector Member	Mauricio Mejia	Florida
Public Sector Member	Cree Morgan	San Francisco, California
Public Sector Member	Randall Morrison	Erie County, New York
Public Sector Member	Doug Musick	Kansas
Public Sector Member	Angel Nazario	City of Boston, Massachusetts
Public Sector Member	Josh Nelson	Oregon
Public Sector Member	Laurence Nolan	Los Angeles County, California (Retired)
Public Sector Member	Julie Quinn	Minnesota
Public Sector Member	Ken Ramsburg	Maryland
Public Sector Member	William Rigby	Utah

This publication is available free of charge from: https://doi.org/10.6028/NIST.SP.1253

Public Sector Member	Kate Smetana	Colorado
Public Sector Member	Hugo Soto	Riverside County, California
Public Sector Member	Dedrick Stephens	City of Cleveland, Ohio
Public Sector Member	Ron Valinski	City of Worcester, Massachusetts
Public Sector Member	James Willis	New York
Public Sector Member	Michelle Wilson	Arizona
Public Sector Member	John Young	Yolo County, California
Private Sector Member	Andy Brassington	Evergreen Herbal
Private Sector Member	David Calix	NCR Corporation
Private Sector Member	Alexander Cook	Wellness Connection of Maine
Private Sector Member	Brian Duncan	ECRS
Private Sector Member	Eric Golden	Cardinal Scale Manufacturing, Co.
Private Sector Member	Christopher Guay	Procter and Gamble, Co.
Private Sector Member	Richard Guild	The Scale People, Inc.
Private Sector Member	George Hatziemanuel	Ohaus Corporation
Private Sector Member	Joanna L. Johnson	Johnson Policy Associates, Inc.
Private Sector Member	Charles Rutherford	CPR Squared, Inc.
Private Sector Member	Richard Shipman	Rice Lake Weighing Systems, Inc.

Weigh-In-Motion Task Group

Office	Name	Affiliation
Co-Chair	Tim Chesser	Arkansas
Co-Chair	Alan Walker	Florida
NTEP Technical Advisor	Darrell Flocken	NCWM
NIST Technical Advisor	Richard Harshman	NIST, Office of Weights and Measures
Public Sector Member	John Barton	NIST, Office of Weights and Measures
Public Sector Member	Jason Flint	New Jersey
Public Sector Member	Greg Gholston	Mississippi
Public Sector Member	Lenny Goebel	Illinois
Public Sector Member	John McGuire	New Jersey
Public Sector Member	Jason Smith	South Dakota
Private Sector Member	Cary Ainsworth	Tufner Weighing and Automation Systems
Private Sector Member	Jon Arnold	Intercomp Company
Private Sector Member	Scott Davidson	Mettler-Toledo, LLC
Private Sector Member	James Faas	YRC Freight
Private Sector Member	Brad Fryburger	Southern II Scale
Private Sector Member	Eric Golden	Cardinal Scale Manufacturing, Co.
Private Sector Member	Joe Grell	Rice Lake Weighing Systems, Inc.
Private Sector Member	Randy Hanson	International Road Dynamics
Private Sector Member	John Lawn	Rinstrum, Inc.
Private Sector Member	Joe Rickey	Rinstrum, Inc.

This publication is available free of charge from: https://doi.org/10.6028/NIST.SP.1253

Private Sector Member	Louis Straub	Fairbanks Scale, Inc.
Private Sector Member	Richard Suiter	Richard Suiter Consulting
Private Sector Member	Brian Taylor	Intelligent Imaging Systems
Private Sector Member	Russ Vires	Mettler-Toledo, LLC
Private Sector Member	Sam Wimsett	Cardinal Scale Manufacturing, Co.
Private Sector Member	Matt Young	Intercomp Company

Point-Of-Sale System Tare Task Group

Office	Name	Affiliation
Chair	Loren Minnich	Kansas
NTEP Technical Advisor	Darrell Flocken	NCWM
NIST Technical Advisor	Richard Harshman	NIST, Office of Weights and Measures
Public Sector Member	Mark Demings	Utah
Public Sector Member	Mike Peeler	New Jersey
Public Sector Member	Ken Ramsburg	Maryland
Private Sector Member	Gary Benjamin	NCR Corporation
Private Sector Member	Scott Henry	Zebra Technologies
Private Sector Member	Heidi Robinson	Publix Super Markets
Private Sector Member	Elizabeth Tansing	Food Marketing Institute

NTEP EVSE Work Group

Office	Name	Affiliation
Chair	Andrei Moldoveanu	NEMA
NTEP Technical Advisor	Darrell Flocken	NCWM
NIST Technical Advisor	Juana Williams	NIST, Office of Weights and Measures
Public Sector Member	Tom Buck	Ohio
Public Sector Member	John Roach	California
Private Sector Member	Ted Bohn	ANL
Private Sector Member	Harry Haas	Siemens Industry, Inc.
Private Sector Member	Bill Hardy	Power Measurements, LLC
Private Sector Member	Dave Parmelee	Control Module, Inc.

Multiple Dimension Measuring Device Work Group

Office	Name	Affiliation
Chair	Chris Senneff	Rice Lake Weighing Systems, Inc.
NTEP Technical Advisor	Darrell Flocken	NCWM
NIST Technical Advisor	Richard Harshman	NIST, Office of Weights and Measures
Public Sector Member	Tom Buck	Ohio
Public Sector Member	Fran Elson-Houston	Ohio

This publication is available free of charge from: https://doi.org/10.6028/NIST.SP.1253

Public Sector Member	Jeff Fantozzi	Ohio
Public Sector Member	Jeff Gibson	Ohio
Public Sector Member	Mike Kelley	Ohio
Public Sector Member	Pascal Turgeon	Measurement Canada, Policy/Regulations Group
Private Sector Member	Sprague Ackley	Honeywell
Private Sector Member	Bruce Budinger	AOA Xinetics/NGC
Private Sector Member	Jeff Cooper	National Motor Freight Traffic Association
Private Sector Member	Bill Danderand	FedEx
Private Sector Member	Scott Davidson	Mettler-Toledo, LLC
Private Sector Member	Michael Eichenberg	FreightSnap, LLC
Private Sector Member	James Faas	YRC Freight
Private Sector Member	Scott Henry	Zebra Technologies
Private Sector Member	Robert Kennington	Cubiscan
Private Sector Member	Scott Murchison	Zebra Technologies
Private Sector Member	Don Newell	Newell Enterprises, LLC
Private Sector Member	Sameer Parmar	SICK, Inc.
Private Sector Member	Tony Romeo	Datalogic
Private Sector Member	Richard Shipman	Rice Lake Weighing Systems, Inc.
Private Sector Member	Mike Stutler	United Parcel Service
Private Sector Member	Richard Suiter	Richard Suiter Consulting
Private Sector Member	Russ Vires	Mettler-Toledo, LLC
Private Sector Member	Xin Wang	Amazon
Private Sector Member	Scott Wigginton	United Parcel Service

NTEP Belt-Conveyor Scale Sector

Office	Name	Affiliation
Chair	Peter Sirrico	Thayer Scale / Hyer Industries
NTEP Technical Advisor	Darrell Flocken	NCWM
NIST Technical Advisor	John Barton	NIST, Office of Weights and Measures
Public Sector Member	Tina Butcher	NIST, Office of Weights and Measures
Public Sector Member	Zacharias Tripoulas	Maryland

NTEP Grain Analyzer Sector

Office	Name	Affiliation
Chair	Karl Cunningham	Illinois
NTEP Technical Advisor	Darrell Flocken	NCWM
NIST Technical Advisor	G. Diane Lee	NIST, Office of Weights and Measures
Advisory Member	Cassie Eigenmann	Retired
Public Sector Member	Randy Burns	Arkansas

This publication is available free of charge from: https://doi.org/10.6028/NIST.SP.1253

Public Sector Member	Tina Butcher	NIST, Office of Weights and Measures
Public Sector Member	Ivan Hankins	Iowa
Public Sector Member	Thomas Hughes	Missouri
Public Sector Member	Jason Jordan	USDA, GIPSA, Technical Services Division
Public Sector Member	Loren Minnich	Kansas
Private Sector Member	Jeffrey Adkisson	Grain and Feed Association of Illinois
Private Sector Member	Rachel Beiswenger	TSI Incorporated
Private Sector Member	Martin Clements	The Steinlite Corporation
Private Sector Member	Andrew Gell	Foss North America
Private Sector Member	Charles Hurburgh, Jr.	Iowa State University
Private Sector Member	Jess McCluer	National Grain and Feed Association
Private Sector Member	Thomas Runyon	Seedburo Equipment Co.

NTEP Measuring Sector

Office	Name	Affiliation
Chair	Michael Keilty	Endress + Hauser Flowtec AG, USA
NTEP Technical Advisor	Darrell Flocken	NCWM
Technical Advisor	Clark Cooney	California Division of Measurement Stds.
Public Sector Member	Luciano Burtini	Measurement Canada
Public Sector Member	Tina Butcher	NIST, Office of Weights and Measures
Public Sector Member	John Roach	California
Private Sector Member	Steve Bar	Bennett Pump Company
Private Sector Member	Marc Buttler	Emerson Process Management/Micro Motion
Private Sector Member	Craig Cavanaugh	Tuthill Transfer Systems
Private Sector Member	Rodney Cooper	Brodie International
Private Sector Member	Constantine Cotsoradis	Flint Hills Resources
Private Sector Member	Ronnell Gallon	Zenner Performance Meters, Inc.
Private Sector Member	John Hathaway	Murray Equipment
Private Sector Member	Dmitri Karimov	Liquid Controls, LLC
Private Sector Member	Douglas Long	RDM Industrial Electronics
Private Sector Member	Wade Mattar	Invensys / Foxboro
Private Sector Member	Richard Miller	FMC Technologies Measurement Solutions, Inc.
Private Sector Member	Randy Moses	Wayne Fueling Systems
Private Sector Member	Andre Noel	Neptune Technology Group, Inc.
Private Sector Member	Christopher (Adam) Oldham	Gilbarco, Inc.
Private Sector Member	Robin Parsons	Parafour Innovations, LLC
Private Sector Member	Brent Price	Gilbarco, Inc.
Private Sector Member	Richard Tucker	RL Tucker Consulting, LLC

This publication is available free of charge from: https://doi.org/10.6028/NIST.SP.1253

This publication is available free of charge from: https://doi.org/10.6028/NIST.SP.1253

NTEP Software Sector

Office	Name	Affiliation
Chair	James Pettinato	FMC Technologies Measurement Solutions, Inc.
NTEP Technical Advisor	Darrell Flocken	NCWM
Technical Advisor	Vere Miller	Mettler-Toledo, LLC
Secretary	Teri Gulke	Liquid Controls, LLC
Public Sector Member	Andrei Brezoica	California
Public Sector Member	Tom Buck	Ohio
Public Sector Member	Luciano Burtini	Measurement Canada
Public Sector Member	Jeff Gibson	Ohio
Public Sector Member	Eric Morabito	New York
Public Sector Member	John Roach	California
Public Sector Member	Ambler Thompson	NIST, Office of Weights and Measures
Public Sector Member	Zacharias Tripoulas	Maryland
Private Sector Member	Mary Abens	Emerson Process Management
Private Sector Member	John Atwood	Tyson Foods
Private Sector Member	Gary Benjamin	NCR Corporation
Private Sector Member	Benjamin Bertz	Red Seal Measurement
Private Sector Member	Bruce Budinger	AOA Xinetics/NGC
Private Sector Member	Kevin Detert	Avery Weigh-Tronix
Private Sector Member	Brian Duncan	ECRS
Private Sector Member	Andrew Gell	Foss North America
Private Sector Member	Keith Harper	Gencor Industries, Inc.
Private Sector Member	Jan Konijnenburg	Rice Lake Weighing Systems, Inc.
Private Sector Member	Dominic Meyer	KSi Conveyors, Inc.
Private Sector Member	Richard Miller	FMC Technologies Measurement Solutions, Inc.
Private Sector Member	Christopher (Adam) Oldham	Gilbarco, Inc.
Private Sector Member	Mike Roach	VeriFone
Private Sector Member	Robin Sax	CompuWeigh Corporation
Private Sector Member	David Vande Berg	Vande Berg Scales
Private Sector Member	John Wind	Ossid LLC
Private Sector Member	Kraig Wooddell	Hobart

NTEP Weighing Sector

Office	Name	Affiliation
Chair	Rob Upright	VPG Transducers
NTEP Technical Advisor	Darrell Flocken	NCWM
NIST Technical Advisor	Richard Harshman	NIST, Office of Weights and Measures
Advisory Member	Robert Feezor	Retired

Public Sector Member	Tom Buck	Ohio
Public Sector Member	Tina Butcher	NIST, Office of Weights and Measures
Public Sector Member	Kevin Chesnutwood	NIST, Office of Weights and Measures
Public Sector Member	Fran Elson-Houston	Ohio
Public Sector Member	Nathan Gardner	Oregon
Public Sector Member	Marcus Harwitz	USDA, GIPSA, FGIS
Public Sector Member	Robert Meadows	Kansas
Public Sector Member	Loren Minnich	Kansas
Public Sector Member	Eric Morabito	New York
Public Sector Member	Zacharias Tripoulas	Maryland
Public Sector Member	Pascal Turgeon	Measurement Canada
Public Sector Member	Juana Williams	NIST, Office of Weights and Measures
Private Sector Member	Cary Ainsworth	Tufner Weighing Systems
Private Sector Member	Steven Beitzel	Systems Associates, Inc.
Private Sector Member	Neil Copley	Thurman Scale Co.
Private Sector Member	Bill Danderand	FedEx
Private Sector Member	Brian Duncan	ECRS
Private Sector Member	Mitchell Eyles	Flintec, Inc.
Private Sector Member	Brad Fryburger	Southern II Scale
Private Sector Member	Eric Golden	Cardinal Scale Manufacturing, Co.
Private Sector Member	Jon Heinlein	Transcell Technology, Inc.
Private Sector Member	Scott Henry	Zebra Technologies
Private Sector Member	Sam Jalahej	Totalcomp, Inc.
Private Sector Member	Jan Konijnenburg	Rice Lake Weighing Systems, Inc.
Private Sector Member	John Lawn	Rinstrum, Inc.
Private Sector Member	L. Edward Luthy	Schenck Process Transport N.A.
Private Sector Member	Thomas Rice	Mettler-Toledo, LLC
Private Sector Member	Kyle Schaffer	Tufner Weighing Systems
Private Sector Member	Louis Straub	Fairbanks Scale, Inc.
Private Sector Member	Russ Vires	Mettler-Toledo, LLC
Private Sector Member	Jerry Wang	A&D Engineering, Inc.
Private Sector Member	John Wind	Ossid LLC

This publication is available free of charge from: https://doi.org/10.6028/NIST.SP.1253

Central Weights and Measures Association (CWMA) www.cwma.net				
States	Illinois Indiana Iowa	Kansas Michigan Minnesota	Missouri Nebraska North Dakota	Ohio South Dakota Wisconsin
Contact	Ms. Sherry Turvey Kansas Department of Agriculture			(785) 564-6682 sherry.turvey@ks.gov
Interim Meeting	October 21 - 23, 2019			Springfield, Illinois
Annual Meeting	May 18 - 20, 2020			Wisconsin Dells, Wisconsin
Interim Meeting	2020, TBD			TBD

Northeastern Weights and Measures Association (NEWMA) www.newma.us				
States	Connecticut Maine Massachusetts	New Hampshire New Jersey New York	Pennsylvania Puerto Rico Rhode Island	Vermont
Contact	Mr. James Cassidy Commonwealth of Massachusetts			(617) 727-3480 james.cassidy@mass.gov
Interim Meeting	October 15 - 17, 2019			Norwich, Connecticut
Annual Meeting	May 4 - 7, 2020			Saratoga Springs, New York
Interim Meeting	2020, TBD			TBD

Southern Weights and Measures Association (SWMA) www.swma.org						
States	Alabama Arkansas Delaware	District of Columbia Florida Georgia	Kentucky Louisiana Maryland	Mississippi North Carolina Oklahoma	South Carolina Tennessee Texas	US Virgin Islands Virginia West Virginia
Contact	Mr. Ed Coleman Tennessee Department of Agriculture				(615) 837-1544 ed.coleman@tn.gov	
Annual Meeting	October 6 - 9, 2019				Knoxville, Tennessee	

Western Weights and Measures Association (WWMA) www.westernwma.org					
States	Alaska Arizona California	Colorado Hawaii Idaho	Montana Nevada New Mexico	Oregon Utah Washington	Wyoming
Contact	Mr. Brett Gurney Utah Department of Agriculture & Food			(801) 538-7158 bgurney@utah.gov	
Annual Meeting	September 8 - 12, 2019			Park City, Utah	

This publication is available free of charge from: https://doi.org/10.6028/NIST.SP.1253

This publication is available free of charge from: https://doi.org/10.6028/NIST.SP.1253

General Session
Proceeding Speeches, Presentations, and Awards

Milwaukee, Wisconsin
July 16 - 20, 2019

Table A
Table of Contents

This publication is available free of charge from: https://doi.org/10.6028/NIST.SP.1253

THIS PAGE INTENTIONALLY LEFT BLANK

This publication is available free of charge from: https://doi.org/10.6028/NIST.SP.1253

Honorary President's Address
"Assuring Equity in the Marketplace: NIST and NCWM, Partners with a Shared Mission"

Milwaukee, Wisconsin
July 16, 2019

Dr. Walter G. Copan
Under Secretary of Commerce for Standards and Technology and
Director, National Institute of Standards and Technology (NIST)

Good morning. Thank you, Doug, for that kind introduction and to all of you for the warm welcome. I'd like to thank Don and Brett for their hospitality and to recognize them for their leadership of the NCWM. Thank you, Randy, for your inspiring remarks in welcoming us all to Milwaukee. You should know that America is grateful for all that you do. I am truly at home with the NCWM and honored to serve as honorary president.

You, our nation's weights and measures inspectors and experts, are on the front lines of metrology. You protect the public, day in and day out, from fraud; from faulty technology. You are the guardians of fair commerce for the USA. Thank you for your service and commitment. 2019 is a very big year for us all.

And I do love coming to Milwaukee. Thanks to our hosts, and all who worked so hard to make sure this program for the NCWM came together. The people of this city and this state are, among many other things, really dedicated to their beer.

And I'm sure those thirsty Wisconsinites expect to receive every ounce—or milliliter—of beer that they pay for. Given the diligence of the state's weights and measures inspectors, I think they can be confident that they do.

In 2018, the Wisconsin Department of Agriculture, Trade and Consumer Protection weights and measures team performed more than 250,000 inspections at more than 6,000 business locations statewide. Here's a small sampling of the things Wisconsin's weights and measures inspectors found. How do these numbers compare to those for your state?

Wisconsin gas pumps either provided the correct amount of fuel or over-delivered in nearly 100 percent of tests. Prices at the register were accurate or in the customer's favor in nearly 99 percent of tests. Tests on scales used to weigh products were accurate or measured in the customer's favor almost 100 percent of the time. Products sold by weight were labeled accurately in almost 99 percent of tests. Inspectors tested more than 5,000 fuel samples for quality last year, and nearly 99 percent of them met required national standards.

Wisconsin inspectors also had impressive stats for ensuring any devices or businesses found out of compliance promptly corrected the issue or faced penalties. In 2018, they collected almost $200,000 in fines. Way to go Wisconsin! It illustrates only too clearly why metrology enforcement often goes unnoticed. The better you do your jobs, the fewer the complaints, the lower the visibility for the topic.

It's achievements like these, that I've come here today to recognize. I also want to reaffirm NIST's strong support for your work.

NIST was founded to fulfill a promise made in the Constitution, to fix the standard of weights and measures. We take that mission as seriously as you do. We are true partners with NCWM and each state and territory of the USA in this shared mission. Part of the way we do that is by supporting the historic cooperation between NIST and NCWM; another part is by helping to maintain the measurement infrastructure of the country through standards.

The kind of standards you use every day to do your work ultimately trace back to standards and measurements at NIST. That system is also harmonized on a global scale so that a meter in Milwaukee is the same as a meter in Marseille.

But the old SI system had a small but significant problem. While the world's defined unit of mass, the International Prototype Kilogram, which is held in a vault outside of Paris, could not change, the kilogram artifacts around the world had been changing their mass relative to it. This was a maddening problem, but finally, after 40 years of work, the unit of mass has been redefined in terms of fundamental properties of nature.

I was proud and humbled to lead the U.S. delegation last November to the General Conference of Weights and Measures in Versailles for an historic vote that made this possible. Something as momentous as the redefinition of not just the kilogram, but also the ampere, kelvin, and mole, only comes around once in a century. Delegates representing the 60 members states that have signed the Treaty of Meter voted unanimously to adopt the redefinitions based on natural constants for SI units.

The change was made effective on May 20, World Metrology Day, of this year. Now, some of you might be wondering if this change will have any effect on your work. The short answer is, not noticeably.

Our goal, together with BIPM and the world's national metrology institutes, was not only to replace the kilogram artifact and other units with unchanging definitions based on nature, but also to smooth the impact it might have on commerce.

We're taking great care with translation from the Kibble balance, the state-of-the-art device that we use to realize the new kilogram definition, to the working physical standards that you will continue to use to check scales and consumer products in the field every day. There will be little to no change in the way weights and measures inspectors do their jobs.

However, we do expect the improved measurement accuracy possible with the redefinitions to enable new technologies of the future. This is likely to be particularly true for small mass measurements like those used for pharmaceutical research and for ultraprecise electrical measurements.

The new definition of the kilogram is based on universal electromagnetic and mechanical forces and on natural constants such as Planck's constant, which relates a light particle's energy to its frequency. A Kibble balance, and therefore a primary realization of a mass unit, can be done at a wide range of sizes, not just one kilogram

This means the redefinition of the kilogram will enable, in theory, accurate and precise measurement at all sizes from nanograms to the mass of planets. In this way, the redefined kilogram will eventually touch all our lives. It now allows better measurement anytime, anywhere since the world no longer needs access to a single artifact in France and it improves scalability of measurements at the same time.

We also know that if you build it they will come. With redefinition of the second based on the cesium atom, we eventually got GPS. And with redefinition of these latest four units we will undoubtedly get new technologies we can't even imagine today. So, while big changes in the weights and measures field and legal metrology won't be coming anytime soon from the redefinition, change is coming in other ways. Regarding changes to the way you do things, I see that there are several items on the docket this year that will have an impact.

First, there is the matter of the regulation of credit card skimmers on gas pumps. Across the nation, criminals have been attacking consumers at the gas pump, stealing their credit card numbers. The problem has gotten so bad that in some instances the Secret Service has gotten involved.

According to NBC News, just this past holiday season, agents surveyed 400 gas stations in 16 states and recovered 200 skimmers, each skimmer containing information for an average of 80 consumers' credit cards. The initiative is estimated to have saved consumers at least $6 million in its first few months alone.

This publication is available free of charge from: https://doi.org/10.6028/NIST.SP.1253

Often it is weights and measures officials who discover these devices during their normal duties and call the police. The question here is whether weights and measures officials should add detecting these devices to their regulatory duties. I will leave it to the NCWM to determine the best course of action. But the fact that this theft of customers' important private data is being discovered and stopped by weights and measures inspectors is something for this group to be proud of.

Another item under consideration concerns a new method for measuring the accuracy of fuel dispensers using flow meters. This is a very complicated issue. As you can see here, five-gallon provers are tried and true. Here's a photo from our archives during the nation's 150th birthday party in Philadelphia in 1926. These provers are simple to use, but they are an ergonomic challenge. They're heavy and there's always the risk of spillage or fire.

Flow meters offer a potential way to address these concerns, along with being faster and having digital output, but adopting new technology is always a challenge. Will these flow meters be as accurate? Do they have product or temperature limitations? Could they be subject to fraud? We must be ready to embrace new technology when it makes sense, and yet know when the costs outweigh the benefits. I look forward to hearing progress reports on this.

There's also the issue of tare. No one wants to pay for the cost of a product's packaging, especially when you're buying an expensive item. However, there is some debate as to whether weighing machines should print receipts showing the gross weight, the tare, and the net weight as opposed to just showing the net weight as they do now.

As we've learned with unit pricing, consumers usually benefit from more information. The guidelines this body sets don't just affect some abstract thing we call the public; they affect each one of us.

As you deliberate this question, I ask you to be sympathetic to both the needs of the consumer and the needs of the businesses, including small businesses, which ultimately must implement any changes in tare practices. In these and in every other way we can, NIST is here to offer guidance, provide technical expertise and help achieve our common goals with NCWM.

In terms of training, in calendar year 2018, the NIST Office of Weights and Measures held 51 separate training events and trained a total of 944 students. These training events included week-long and two-week long metrology seminars at NIST, several day to week-long on-site training seminars on devices and field inspection, and call-in webinars and info-hours.

In FY19, for the first time we began giving two-hour webinars on the topics of package and labeling, and price verification, while continuing our traditional training events. So far, this fiscal year we have trained 55 students in four of these new webinar training events. We'll be rolling out another webinar, "Overview of Handbook 133, Checking the Net Contents of Packaged Goods" in September of this year. We are also developing a pre-recorded webinar on "The method of sale and test procedure for packages of animal bedding."

When completed in FY2020, this will be viewable at any time on the NIST website. If you have not taken advantage of these opportunities, I urge you to do so. They are a great resource. My key message today is that everything we do at NIST lines up perfectly with what all of you in the weights and measures community do every day. We are partners.

NIST work covers an amazing breadth of work from Nobel-Prize-level research on quantum computing to helping ensure that consumers get what they pay for in the marketplace. But the common denominator is to protect the public, assure uniformity in the marketplace, and to help businesses compete. The pace of change in technologies and markets requires us all to adapt. You have NIST's unwavering support and gratitude for your dedication to this shared mission.

We are also committed to the next generation of leaders in weights and measures. Perhaps you or members of your organizations would be interested in career development or job opportunities at NIST. We would welcome working with you on this. I applaud the NCWM for your work in developing a new strategic plan, and look forward to engaging with you as this takes shape.

Together, we are working to ensure equity and economic efficiency for all our citizens. I'd like to leave you with a quote from Charles Dickens. He offered wisdom for life that seems appropriate for those who faithfully serve the

This publication is available free of charge from: https://doi.org/10.6028/NIST.SP.1253

public but are sometimes taken for granted. It should serve you well during both the best and the worst of times: "Do all the good you can and make as little fuss about it as possible."

I hope you continue having a great meeting and I look forward to hearing about your ongoing accomplishments. Thanks to our partners from Canada and other nations for your contributions with us, as well. Thank you all!

This publication is available free of charge from: https://doi.org/10.6028/NIST.SP.1253

Honorary President's Address Presentation

This publication is available free of charge from: https://doi.org/10.6028/NIST.SP.1253

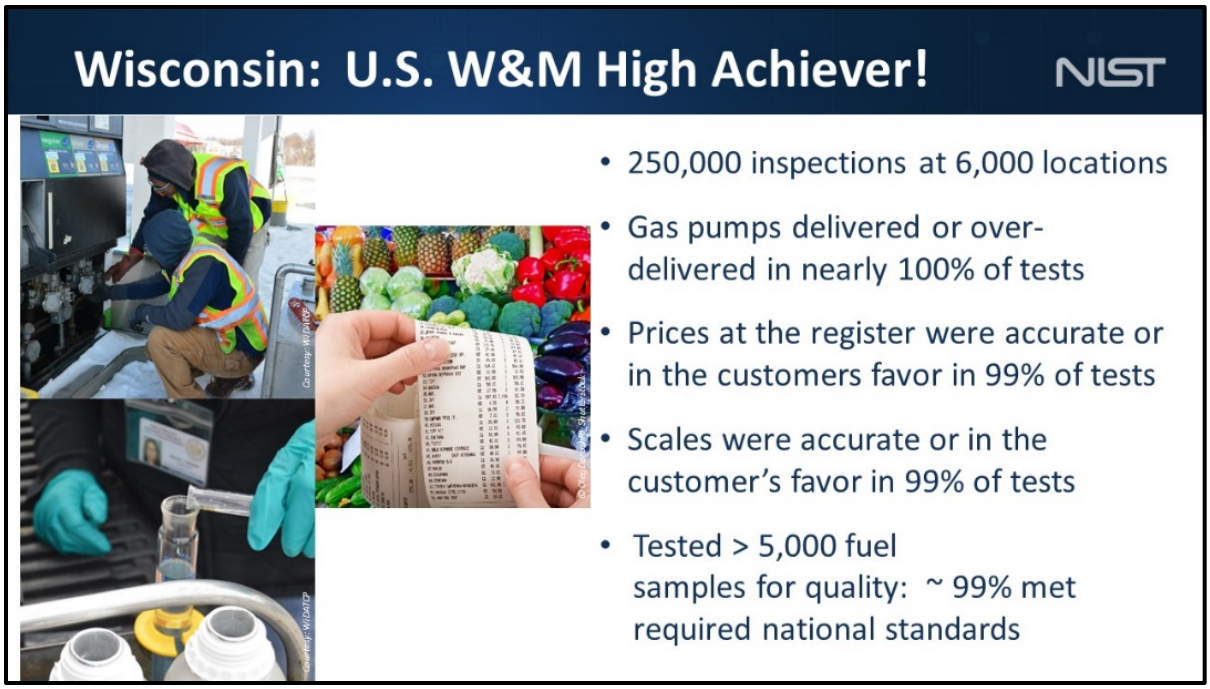

This publication is available free of charge from: https://doi.org/10.6028/NIST.SP.1253

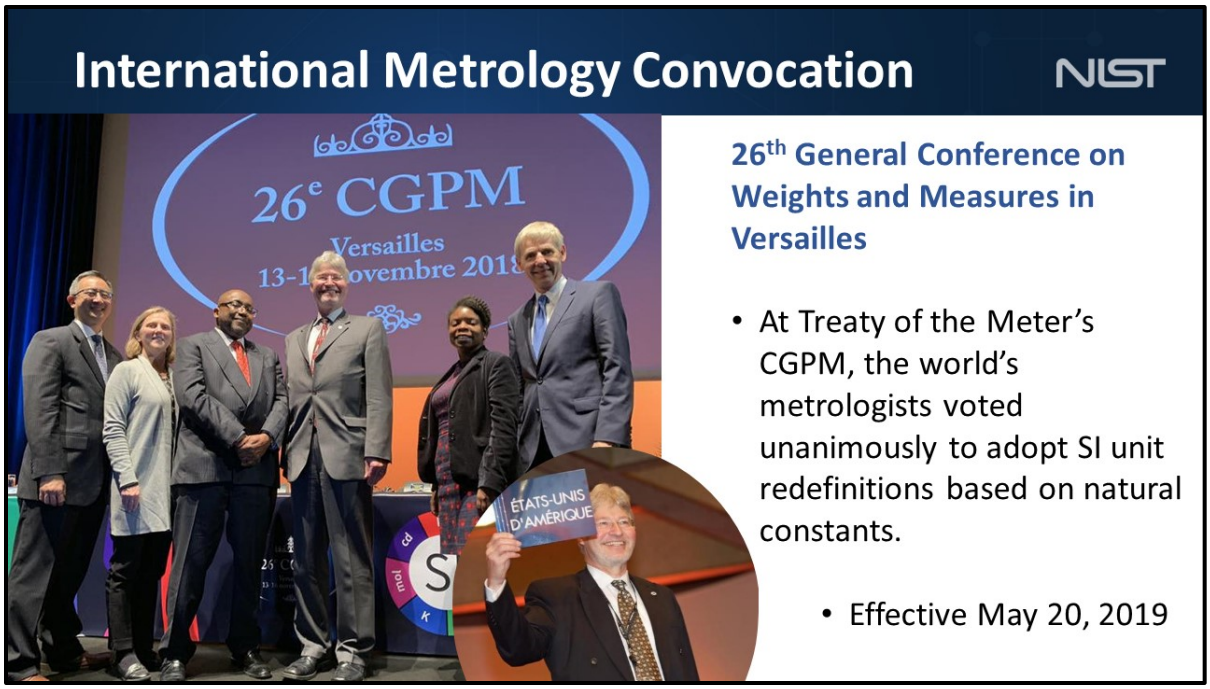

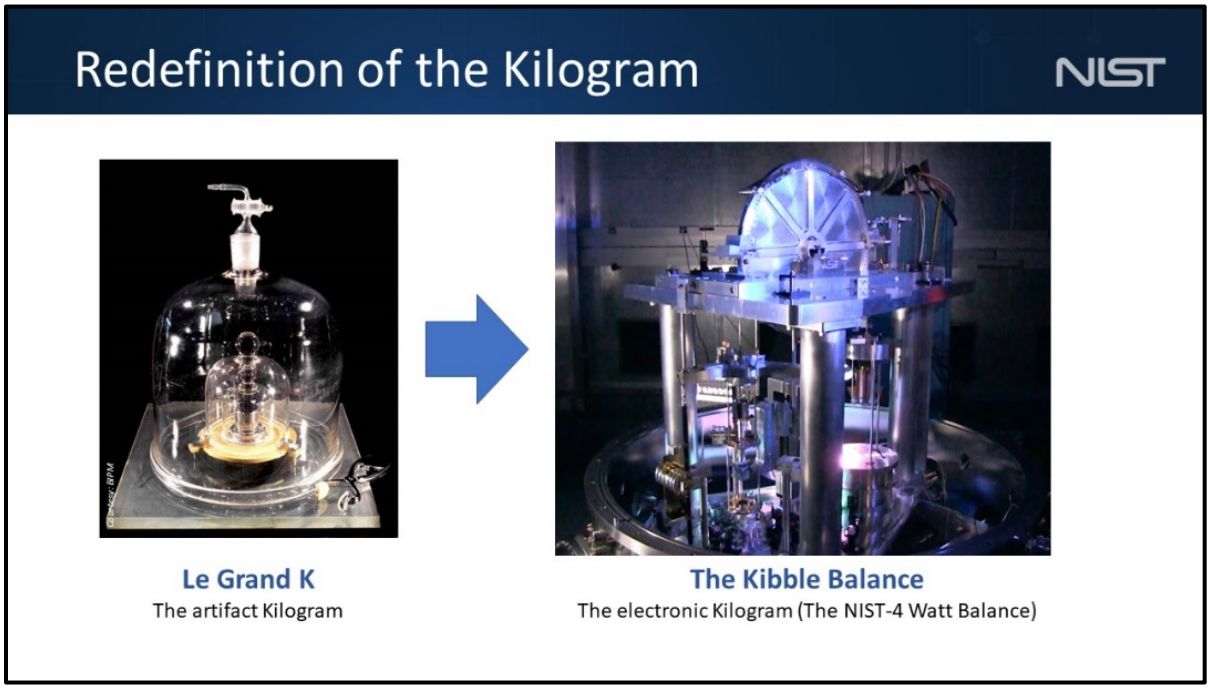

This publication is available free of charge from: https://doi.org/10.6028/NIST.SP.1253

This publication is available free of charge from: https://doi.org/10.6028/NIST.SP.1253

From Nanograms to Planets

NIST

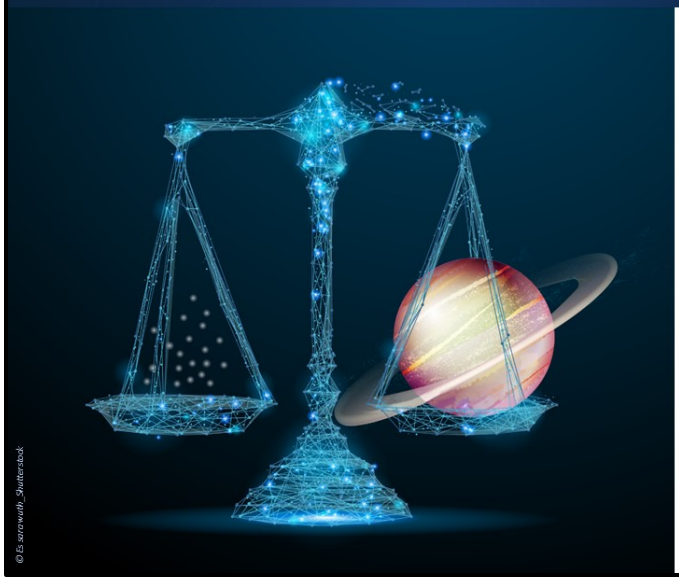

Benefits from Redefined SI

- **Scalability of Units** – Example: Mass measurements equally accurate from nanograms to the mass of planets
- **Accessibility** – Available anytime, anywhere. Directly traceable to quantum measurements available anywhere in the universe
- **Better precision** – History shows that greater precision and accuracy in measurements fosters innovation, enables improved products

Current Issues: Card Skimmers

NIST

2018 Secret Service Investigation

- 400 gas stations in 16 states
- Found 200 skimmers
- Average, 80 credit cards per skimmer
- Operation saved consumers $6 MM

Often discovered by W&M inspectors. Should this be added to regulatory duties?

This publication is available free of charge from: https://doi.org/10.6028/NIST.SP.1253

Current Issues: 5 Gallon Provers

NIST

Provers are:

- Tried and true
- Heavy
- Hard to handle
- Spillage risk

Digital flowmeters: a viable alternative?

Current Issues: Tare Labeling

NIST

- Currently packages display net only
- Should weighing machines print weight, tare and net weight?

This publication is available free of charge from: https://doi.org/10.6028/NIST.SP.1253

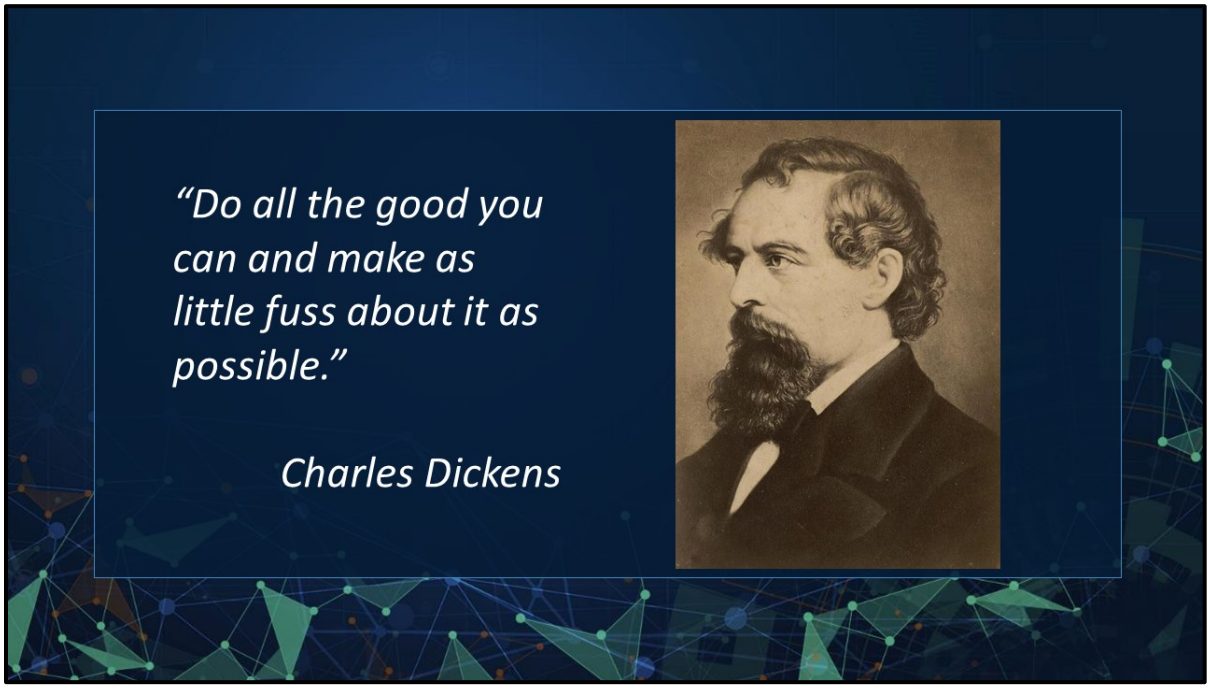

This publication is available free of charge from: https://doi.org/10.6028/NIST.SP.1253

Chairman's Address
National Conference on Weights and Measures

Milwaukee, Wisconsin
July 16, 2019

Brett Gurney
Utah Department of Agriculture and Food
Weights and Measures Program

It is a great honor and privilege to welcome you to Milwaukee, Wisconsin and to the 104th Annual meeting of the National Conference on Weights and Measures.

It has been great to meet so many Weights and Measures officials throughout the country. Thank you for sharing your knowledge and hospitality with me throughout this past year. I want to thank the numerous volunteers we have who make this conference a success. Without you, we would not be able to meet the demands of an innovative marketplace. Your efforts are truly appreciated!

I remember growing up on a cattle ranch with over 2,000 head of mother cows and several hundred acres of farm ground. My family also owned a gas station. My family relied on accurate measurements. It was important to have a current Weights and Measures approval seal on the scales and gas pumps. Weights and Measures officials inspected our scales and retail motor fuel devices. My family's livelihood relied on the accuracy of weights and measurements. At that time, I had no idea that I would grow up to be a Weights and Measures Official.

American citizens and businesses continue to depend on Weight and Measures officials.

The theme this year, "Valued Traditions and New Innovations - Confidence in Every Transaction," reflects the efforts NCWM is taking to ensure equity prevails in the marketplace.

Traditional measurement's and practices are important. We cannot forget the basics of Weights and Measures. Accelerating innovations and world class technology is needed as new products, measuring devices, and measuring practices come forward. The world demands a fast-moving standard setting organization to protect both consumers and businesses and assure fair competition in the marketplace. Daily transactions depend on the success of NCWM. Old questions continue to surface. Are we getting what we pay for? Are business transactions fair in the marketplace? We need to continue to be the confidence in every transaction! We need to continue to do our job!

As I think of the current status of this organization some things come to mind. We currently have 2,413 members. We also have 261 registered to attend this meeting. We have attendees from American Samoa, Australia, Canada, Curacao, and Nigeria. We welcome each of you.

Other things that come to mind include the following; Support from industry, legislatures, and individual jurisdiction administration. We have Weights and Measures jurisdictions and industry that are not here. We have jurisdictions and inspectors who desperately need training. We need experts in Weights and Measures. Every weights and measures jurisdiction face challenges from time to time.

Weights and Measures is often the hidden gem. Even though some consumers and businesses may not always realize it, weights and measures affect everyone.

A few words that describe our NCWM Board of Directors include dedicated, dependable, and passionate. What an honor and a privilege it has been to work with them.

The following questions came up during my first Board of Directors meeting as Chairman.

Is NCWM moving in the right direction? Is NCWM becoming what we want it to be?

There are many new fast past innovations. How can we improve our standard setting organization? It was time for serious reflection. It became evident that we must work on strategic planning. Strategic planning sessions were held. Much discussion took place during these strategic planning sessions. As a result, our Mission and Vision Statements were updated as, "ensuring equity and uniform standards in a changing marketplace." We develop uniform and equitable weights and measures standards to promote commerce and fair competition by leveling the playing field, ensure consumers "get what they pay for", foster confidence in marketplace transactions, and advance economic growth.

Our new Vision Statement is "Making every marketplace transaction fair and equitable." Be a "think tank" for advancing measurement innovation, become a world-leading measurement standard setting organization, and make the world a fairer place to transact business

The over-arching goal of our new plan will be to increase our membership to 5,000. Our Board of Directors will continue to work on strategic planning for this great organization. Our Board of Directors will continue to work on strategic planning. The NCWM needs your help to develop timely, uniform, and equitable weights and measures standards in this fast-paced marketplace full of new innovations. I strongly encourage you to take full advantage of your NCWM membership.

It is with great sadness to share with you that Jim Truex, NTEP Administrator, passed away March 24, 2019. He was an expert in the Weights and Measures profession, friend, teacher and someone we could always count on. We truly miss Jim. Our NTEP customers are continuing to receive high quality service while we go through this transition. We recently hired a NTEP Specialist. The successful candidate estimated start date will be August 15. At this time, we are not releasing this person's name as they are informing their employer of their upcoming career change.

As you know, NCWM conducted a widespread review of regulatory programs across the United States. It was a comprehensive request for information. The survey asked questions about funding sources, operating expenses, staffing, salaries, scope of activities, inspection intervals, and compliance rates. Additionally, a comprehensive Petroleum Laboratory Survey was conducted. These surveys will give us valuable data accruing on a broad spectrum of subject areas that can be used by individual jurisdictions and the U.S. weights and measures community.

It has been a pleasure to meet each of you this past year as your NCWM Chair. Chair-elect Craig VanBuren and I attended each of the regional conferences. I appreciate the hospitality each region offered me. Each region was unique but was similar with a common goal.

I want to thank those who accepted appointments and are currently serving in any capacity in the NCWM. I want to thank Brenda Sharkey, South Dakota, for stepping up and accepting an appointment to represent the CWMA on the Professional Development Committee. I also want to thank David Aguayo, San Louis Obispo County, California, for stepping up and accepting an appointment to represent the WWMA on the Professional Development Committee. Both Brenda and David accepted these positions on very short notice.

Jean Kliethermes, Missouri, recently retired and Marco Mares, San Diego County, California recently accepted another position that would not allow him to continue to part of the PDC Committee. I appreciate their work and wish them success.

Thanks to Rachelle Miller and the State of Wisconsin for your hospitality. As always, I appreciate NIST for being our Technical Advisors.

I also want to recognize and thank the NCWM staff for their dedication and hard work. We can count on their reliable and quick service. Don, Elisa, Tyler, and Darryl do so much for this organization.

I challenge each of you to participate and contribute to the NCWM. You'll find it rewarding, fulfilling, satisfying and an excellent growth opportunity. Thank you for attending and making this year's conference a huge success! NCWM is a strong organization. It truly has been an honor and a privilege to serve as your Chairman! Thank You!

This publication is available free of charge from: https://doi.org/10.6028/NIST.SP.1253

This publication is available free of charge from: https://doi.org/10.6028/NIST.SP.1253

Chairman-Elect's Address
National Conference on Weights and Measures

Milwaukee, Wisconsin
July 16, 2019

Craig VanBuren
Michigan Department of Agriculture and Rural Development

It is an honor and great privilege to take over as the chairman of the National Conference on Weights and Measures. I would like to start out by thanking the nominating committee for considering me for this role and the conference body for electing me. Thank you to the volunteers who serve on the many committees, subcommittees, task groups and various other roles throughout the conference. Our work cannot be completed without the generosity of your time and effort. Thank you to the NCWM staff, Don, Elisa, Tyler, and Darrell, for their efforts and dedication to making the conference run as smoothly as it does and always striving to improve it. Last, but not least, thank you to my family for supporting me through this journey. Particularly, my wife Ronda who encouraged me to accept the position in spite of all the nights away from home.

I joined the weights and measures community twenty years ago through a chance game of golf. It was at that game where I was paired up with Michigan's Director of Consumer Protection and during our round, he convinced me that I should give him a call later to discuss coming to work for him. If you knew Pat, you know that he could be a very persuasive person. I joined the team in January of 2000 and jumped in with both feet.

I attended my first regional conference, CWMA, in April of that year and was encouraged to meet as many people and ask as many questions as I could. If you know me, you know that mingling is not one of my strong suits. However, what I found was this group of people was very easy to approach. Everyone I talked with was willing to answer questions and help me grow my knowledge. I dove into Handbook 44 and quickly learned that I had a lot of questions. Luckily, there was never a shortage of mentors to me and most would still recognize the names today; names like Mercer, Pinagel, DeRubeis, White, Onwiler, Colbrook, Hayes, Hankins and many more including and not forgetting, of course, Truex. I like to say; I was raised by CWMA. The rest, as they say, is history.

I share my weights and measures journey with you for this reason; it is because of the support from this family that I stand before you today. It was a reoccurring theme we heard yesterday; from Constantine's invocation mentioning "commitment", Deputy Secretary Romanski's talk of sharing knowledge, and Dr. Copan's actual recognition of this group as a family. It's amazing how many recognize the unique bond we all share. Frankly, the love I have for the people here in weights and measures is what has kept me here through the rough patches of my career. As we develop the strategic plan to meet our overarching goal of 5,000 members by 2025 (5 by 25), one thing is for certain, we need to ensure the type of support I received continues to be there, not only for new members joining, but also not forgetting those here in the room today.

This leads us into my theme for the year; "Building our Future by Sharing Our Knowledge." Our best tool for growing and retaining members is sharing the knowledge we have with others.

My first goal as chairman is to create a mentoring program for NCWM. We have a vast amount of knowledge among us and, from my experience, I know there are many willing to share. You could even consider this one part of a succession plan, not only for the Conference but for weights and measures as a whole. To many like myself, that initial contact and interaction is always the most difficult. If we can facilitate that introduction and get people comfortable with one another more quickly, the easier it will be to go to a person with questions. On the mentor's side, this would help give a better idea of where the other needs to grow and can help steer them to a path of success.

My second goal for the year is to create an online marketing plan to share our knowledge with more of the outside world. We have the world at our fingertips, we need to use that power to our benefit and share, not only our knowledge, but our story and our value; as Ron Hayes put it at the toast at the 100th meeting, "We're the most powerful organization

no one has ever heard of." We need to make a concerted effort to change that. One of the great ways we've been doing that is with the toolkit videos. I believe we need create complementing pieces to those. I'll be working with Don and his team to develop and implement online advertising campaigns with specific targets to get the best return on our investment and drive people to our information.

My final goal brings us back to you, the members. We heard Monday there were at least two areas members asked for training. I will work to find those and other training opportunities and bring them to you either here at the conference, at the regional meetings, or in any other place we can, whether that be online or in-person. As we've seen here the last few years with new items, devices are ever-changing and there is always something new we can learn whether it be a two-hour class or a 30-minute demonstration. Don't be surprised if I reach out to some of you to provide this, particularly the AMC members. I know we're all busy in our "regular" jobs, so I will do what I can to get you the tools and help you need so we can share that knowledge.

To that end, the NCWM has great opportunity for growth; in size, in scope, in responsibility, and in knowledge. It will not be easy, and there will be struggles, but as many in weights and measures programs, particularly in state and local governments, know if there is one thing we are good at, it is adapting and overcoming obstacles.

Thank you and I look forward to helping the National Conference on Weights and Measures grow!

Now I'd like to take an opportunity to make the following appointments:

Specifications and Tolerances Committee

- Loren Minnich, Kansas (5-year term)

Laws and Regulations Committee

- Tim Elliott, Washington (5-year term)

Professional Development Committee

- Paul Floyd, Louisiana (5-year term)

Nominating Committee (1-year term)

- Committee Chair - Brett Gurney, Utah
- Northeastern Representative - Jimmy Cassidy, Massachusetts
- Central Representative - Ivan Hankins, Iowa
- Southern Representative - Steve Benjamin, North Carolina
- Active Member - Hal Prince, Florida
- Active Member - Ron Hayes, Missouri

Credentials Committee

- Vanessa Benchea, Florida (3 years)

Parliamentarian

- Lou Straub, Fairbanks Scale

This publication is available free of charge from: https://doi.org/10.6028/NIST.SP.1253

Chaplain

- Gene Robertson, Mississippi

Presiding Officers

- Central - Scott Ferguson, Michigan
- Northeastern - Ethan Bogren, Westchester County New York
- Western - Kevin Schnepp, California
- Southern - Tim Chesser, Arkansas

Sergeants of Arms

- The 2020 conference will be Washington officials named at a later date.

Again, thank you to the volunteers serving, the NCWM staff, Shelly Miller and the state of Wisconsin and city of Milwaukee, and thank you for the opportunity to lead the Conference. I look forward to seeing you all in Riverside, California in January.

This publication is available free of charge from: https://doi.org/10.6028/NIST.SP.1253

This publication is available free of charge from: https://doi.org/10.6028/NIST.SP.1253

THIS PAGE INTENTIONALLY LEFT BLANK

This publication is available free of charge from: https://doi.org/10.6028/NIST.SP.1253

Roll Call of the States

The Roll Call of the States is taken at the commencement of the Voting Session of the Annual Meeting.

Alabama
Alaska **(X)**
American Samoa **(X)**
Arizona **(X)**
Arkansas **(X)**
California **(X)**
Colorado **(X)**
Connecticut **(X)**
Delaware
District of Columbia **(X)**
Florida **(X)**
Georgia **(X)**
Guam
Hawaii
Idaho
Illinois **(X)**
Indiana
Iowa **(X)**
Kansas **(X)**
Kentucky **(X)**
Louisiana **(X)**
Maine **(X)**
Maryland **(X)**
Massachusetts **(X)**
Michigan **(X)**
Minnesota **(X)**
Mississippi **(X)**
Missouri **(X)**
Montana **(X)**
Navajo Nation
Nebraska **(X)**
Nevada **(X)**
New Hampshire
New Jersey **(X)**
New Mexico **(X)**
New York **(X)**
North Carolina **(X)**
North Dakota **(X)**
Northern Mariana Islands
Ohio
Oklahoma
Oregon **(X)**
Pennsylvania **(X)**
Puerto Rico
Rhode Island
South Carolina
South Dakota **(X)**
Tennessee **(X)**
Texas **(X)**
Utah **(X)**
Vermont **(X)**
Virgin Islands
Virginia **(X)**
Washington **(X)**
West Virginia **(X)**
Wisconsin **(X)**
Wyoming

Present (X): **41**
Absent: **16**

104th NCWM Annual Meeting/Award Recipients

Anniversary Awards

For 5 Years Attendance

- Paige Anderson
- David Aguayo
- John Barton
- Ethan Bogren
- Tim Elliot
- Brad Fryburger
- Eric Golden
- Lori Jacobson
- Brian Kernke
- Tom Konst
- Josh Nelson
- Marc Paquette
- Walt Remmert
- Marie Valentine
- Scott Zaremba

For 10 Years Attendance

- Marc Buttler
- G. Diane Lee

For 15 Years Attendance

- Steven Beitzel
- Hal Prince

For 20 Years Attendance

- Ed Luthy

For 25 Years Attendance

- Randy Jennings

For 30 Years Attendance

- Ron Hayes

For 50 Years Attendance

- Jo-Jo Silvestro

This publication is available free of charge from: https://doi.org/10.6028/NIST.SP.1253

Special Recognition Awards

Presiding Officers

- Tim Chesser, Arkansas
- Doug Musick, Kansas
- Kevin Schnepp, California
- Jane Zulkiewicz, Town of Barnstable, Massachusetts

Chaplain

- Constantine Cotsoradis, Flint Hills Resources

Parliamentarian

- Lou Straub, Fairbanks Scales, Inc.

Sergeants-at-Arms

- Jacques Daniels, Wisconsin
- Greg Loreck, Wisconsin

Nominating Committee

- Chairman - James Cassidy, Massachusetts
- Stephen Benjamin, North Carolina
- Mark Coyne, City of Brockton, Massachusetts
- Steven Harrington, Oregon
- Ronald Hayes, Missouri
- Kristin Macey, California
- Ken Ramsburg, Maryland

Credentials Committee

- Chairman - Elaine Grillo, Boston, Massachusetts

Associate Membership Committee

- Chairman - Mark Flint, ADM
- Vice-Chair - Bob Wiese, NW Tank & Environmental Services
- Secretary/Treasurer - Ron Gibson, Seraphin

COMPLETING TERMS

Board of Directors

- Chris Guay, Proctor/Gamble (AMC Rep.)
- Jack Walsh, Town of Wellesley, Massachusetts

Laws and Regulations Committee

- Michelle Wilson, Arizona

Professional Development Committee

- Gene Robertson, Mississippi

Specifications and Tolerances Committee

- Loren Minnich, Kansas

Contributions Award

- Josh Nelson, Oregon
- Manuch Nikanjam, Chevron
- Scott Simmons, Colorado

Distinguished Service Award

- Chuck Corr, Archer Daniels Midland
- Richard Harshman, NIST OWM
- Julie Quinn, Minnesota

Lifetime Achievement Award

- Ronald Hayes, Missouri

This publication is available free of charge from: https://doi.org/10.6028/NIST.SP.1253

Lifetime Achievement Award

Qualifications:[1] This award recognizes members that are by and large well-known and highly regarded for their outstanding performance and contributions to NCWM. No more than one (1) award can be granted annually. The recipient will have been a member of NCWM for at least ten years. Nominees will be considered based on the following characteristics:

The Lifetime Achievement Award is NCWM's highest honor. This award may be presented to just once individual each year. Recipients shall have been NCWM members for at least 10 years and are well-known and highly regarded for their integrity and leadership over many years. They have inspired confidence through unbiased input that demonstrates their only motivation is the improvement of the organization and our work. They have displayed sound decision-making capabilities, communication skills, and tolerance for the views of others.

The 2019 recipient of the NCWM Lifetime Achievement Award is Ron Hayes of the Missouri Department of Agriculture.

Figure 1. Lifetime Achievement Award recipient, Mr. Ron Hayes (center), receives his award from Mr. Brett Gurney, NCWM Chairperson (left), and President Dr. Walter Copan, NIST Director (right).

This year's recipient began his weights and measures career in 1976 as a Grain Moisture Meter Inspector. This was followed by various titles within the state's Grain Moisture Meter and Fuel Quality Programs. He has been the state Director of Weights, Measures and Consumer Protection since 2008.

His contributions over the past 43 years are staggering. Here's an abbreviated list:

- Fuels and Lubricants Subcommittee since 1992 with many contributions to that group including multiple years as Chairman and Vice-Chair.
- National Biodiesel Research and Brainstorming Workshop
- 3-Time Panelist of the National Biodiesel Conference & Expos
- Automatic Temperature Compensation Steering Committee
- Board of Directors, with the distinction of serving as Chairman of the Board of the 100th NCWM Annual Meeting
- NTEP Committee
- Finance Committee
- Nominating Committee, and much, much more.

---

[1] The criteria for special awards were obtained from the NCWM website at **www.ncwm.com.**

Distinguished Service Award

Qualifications: This award recognizes members that have made a long-term commitment of service and leadership to NCWM. The recipient will have been a member of NCWM for at least ten years and made significant contributions to the enhancement of the organization as a whole through committee service, important contributions to standards development, served as a resource for knowledge, promoted the vision for NCWM, or other long-term commitments that have advanced the mission of NCWM. Please note it is not necessary for the nominee to have provided contributions in each category.

The first recipient of the 2019 Distinguished Service Award is Chuck Corr. Chuck is Manager of Biofuels Technical Service at Archer Daniels Midland Company. He has lived in Iowa his entire life and worked in the same facility his entire career. Chuck has been attending NCWM meetings since 2007 and is an active participant on the Fuels and Lubricants Subcommittee.

Chuck was elected to the NCWM Board of Directors in 2013 as an At-Large Director, completing his term last year at our Annual Meeting in Tulsa. He was an ideal fit as an at-large director, not because of his tall stature, but because of his ability to always see the big picture, rather than the narrower view of a biofuels specialist. While serving on the board, he led the annual policy review team which resulted in new NCWM policies as well as improvements to existing ones.

In the Fuels and Automotive Lubricants Subcommittee, Chuck worked with the Biodiesel Transfer Document Work Group and various focus groups. He has led the Terminology Focus Group and has led the way toward harmonization of the Method of Sale of Commodities regulation and the Engine Fuels and Automotive Lubricants Regulation.

Chuck has also provided leadership to the ASTM D02 and E48 Committees and has earned many awards for his efforts there. He remains humble and is a man people enjoy being around for his kind nature, his sense of humor, his work ethic and his expertise.

Chuck is retiring on July 31, allowing more time for building 3-D printers and crashing radio-controlled planes.

Figure 2. Distinguished Service Award to Mr. Chuck Corr, Archer Daniels Midland Company.

Mr. Chuck Corr (center), receives the Distinguished Service Award from Mr. Brett Gurney, NCWM Chairperson (left) and Conference President, Dr. Walter Copan, NIST Director (right).

This publication is available free of charge from: https://doi.org/10.6028/NIST.SP.1253

This publication is available free of charge from: https://doi.org/10.6028/NIST.SP.1253

The next recipient of the 2019 Distinguished Service Award is Richard Harshman. Rick was a weights and measures official in the State of Maryland from 1981 to 1994. He left weights and measures for a time after that to work with the family auto dealership and then returned to our world in 2003 when he joined the team at the NIST Office of Weights and Measures.

Rick is a Weights and Measures Coordinator for NIST OWM. In this role, he has been a Technical Advisor to the:

- NCWM Specifications and Tolerances Committee
- NTEP Weighing Sector
- NTEP Multiple Dimension Measuring Devices Work Group
- NTEP Automatic Weighing Systems Work Group
- US DOT Weighing-in-Motion Work Group, and
- NCWM Weigh-in-Motion Task Group.

As a Technical Advisor, Rick has brought perspective on a broad array of technical issues and has brought institutional knowledge of NCWM and NTEP processes. Rick has worked closely with committee members to develop quality reports and analysis. He is well-respected and recognized in legal metrology and has been a friend to the weights and measures community. Rick is a kind and genuine man with a big heart and a friend to NCWM.

Figure 3. Distinguished Service Award to Mr. Richard Harshman, National Institute for Standards and Technology.

Mr. Richard Harshman (center), receives the Distinguished Service Award from Mr. Brett Gurney, NCWM Chairperson (left) and Conference President, Dr. Walter Copan, NIST Director (right).

The final recipient of the 2019 Distinguished Service Award is Julie Quinn. Julie began her weights and measures career in 1993 as an investigator, then to the fuels lab before moving on up the ladder to Assistant Director of Weights and Measures and ultimately Director. Julie retired this spring.

She came to NCWM in 2006 and very quickly went to work as a valued volunteer. Her NCWM Service includes:

- Professional Development Committee
- Safety Awareness Liaison between NCWM and the Central Weights and Measures Association
- Training Manual Task Group
- Chair of the Multi-Point Calibration Task Group
- Safety Liaison to the Professional Development Committee
- Founder and Chair of the Safety Subcommittee, and
- At-Large Director on the NCWM Board of Directors.

Julie's work with inspector safety has been exemplary. It is a passion of hers as demonstrated when she received the Minnesota Governor's Meritorious Safety award as part of the Minnesota Weights and Measures Safety Committee in 2012, 2017 and 2018.

Figure 4. Distinguished Service Award to Ms. Julie Quinn.

Ms. Julie Quinn (center), receives the Distinguished Service Award from Mr. Brett Gurney, NCWM Chairperson (left) and Conference President, Dr. Walter Copan, NIST Director (right).

This publication is available free of charge from: https://doi.org/10.6028/NIST.SP.1253

Contributions Award

The NCWM Contributions Award recognizes members who have made notable contributions to NCWM standards, policy, administrative support or other services deemed worth of recognition. Recipients have been NCWM members for at least five years.

Our first recipients of the 2019 Outstanding Contributions Award are Josh Nelson and Scott Simons, who are being recognized together today. Josh is a Field Supervisor for the Oregon Weights and Measures Program. Scott is an Inspection Supervisor for the Colorado Division of Oil and Public Safety. Josh and Scott are being recognized together today for outstanding training services they have provided to the broader weights and measures community.

These gentlemen were selected by the NIST Office of Weights and Measures to assist with NIST training programs around the country, specifically in the inspection of retail motor fuel dispensers and LP gas meters. They have worked closely with the NIST trainers and bring their experience as weights and measures officials to the classroom; building on the training material and learning objectives developed by NIST. Students of the program value the first-hand experience they bring to the training sessions.

Both men serve their respective states, the Western Weights and Measures Association and NCWM in many ways, but today we thank them for their exemplary efforts in advancing the knowledge and professionalism of weights and measures officials across the country.

Figure 5. Outstanding Contributions Award to Scott Simmons and Josh Nelson.

Pictured from left to right is Mr. Brett Gurney, NCWM Chairperson, Mr. Scott Simmons and Josh Nelson, and Conference President, Dr. Walter Copan, NIST Director.

The next recipient of the Outstanding Contributions Award is Manuch Nikanjam recently retired from Chevron Global Downstream, LLC. Accepting this award on behalf of Manuch is Randy Jennings of Tennessee.

Manuch has been involved in NCWM and the Fuels and Lubricants Subcommittee since 1998. During that time, he has worked outside the limelight of thes e sessions while providing outstanding leadership.

Most his work has led to unanimous support in the subcommittee for a much-needed review of the Premium Diesel requirements in the Uniform Fuels and Automotive Lubricants Regulation. He coordinated and documented technical justification for all properties that were agreed upon by both, an informal focus group and the entire subcommittee. He always has respected the minority point of view and most impressively, Manuch does this with a demeanor that exemplifies a true professional. Receiving the award for Manuch is Randy Jennings of Tennessee.

Figure 6. Outstanding Contributions Award to Mr. Randy Jennings, Tennessee.

Mr. Randy Jennings (center), receives the Outstanding Contributions Award on behalf of Manuch Nikanjam from Mr. Brett Gurney, NCWM Chairperson (left) and Conference President, Dr. Walter Copan, NIST Director (right).

This publication is available free of charge from: https://doi.org/10.6028/NIST.SP.1253

NCWM Board of Directors
2019 Final Report

Mr. Brett Gurney, Chairman
Utah

INTRODUCTION

This is the report of the Board of Directors (hereinafter referred to as the "Board") for the 104th Annual Meeting of the National Conference on Weights and Measures (NCWM). This report is based on the Interim Report offered in the NCWM Publication 16, testimony heard at public hearings, comments received from the regional weights and measures associations and other parties, the addendum sheets issued at the Annual Meeting, and actions taken by the membership at the voting session of the Annual Meeting. The Informational items presented below were adopted as presented when the Board's report was approved.

Table A identifies the agenda and appendix items. Agenda items are identified in the Report by Reference Key Number, Item Title, and Page Number. Item numbers are those assigned in the Interim Meeting agenda. A Voting item is indicated with a "**V**" after the item number. An item marked with an "**I**" after the reference key number is an Informational item. An item marked with a "**D**" after the reference key number is a Developing item. The developing designation indicates an item has merit; however, the item was returned to the submitter for further development before any action can be taken at the national level. An agenda "Item Under Consideration" is a statement of proposal and not necessarily a recommendation of the BOD. Suggested revisions are shown in **bold** face print by **striking out** information to be deleted and **underlining** information to be added. Table B lists the results of any Voting Items.

Proposed revisions to the handbook(s) are shown as follows: 1) deleted language is indicated with a **bold face font using ~~strikeouts~~** (e.g., **~~this report~~**), and 2) proposed new language is indicated with an **underscored bold-faced font** (e.g., **new items**). When used in this report, the term "weight" means "mass".

Note: It is the policy to use metric units of measurement in publications; however, recommendations received by NCWM technical committees and regional weights and measures associations have been printed in this publication as submitted. Therefore, the report may contain references to inch-pound units.

Subject Series List

Table A
Table of Contents

Appendices

This publication is available free of charge from: https://doi.org/10.6028/NIST.SP.1253

This publication is available free of charge from: https://doi.org/10.6028/NIST.SP.1253

Table B
Glossary of Acronyms and Terms

Acronym	Term	Acronym	Term
AMC	Associate Membership Committee	NTEP	National Type Evaluation Program
NCWM	National Conference on Weights and Measures	OIML	International Organization of Legal Metrology
NIST	National Institute of Standards and Technology	OWM	Office of Weights and Measures

Details of All Items
(In order by Reference Key)

ACT – Activity Reports

ACT-1 I Membership

Membership

The chart and graph below show NCWM membership levels as of June 30 of recent years by membership categories. It should be noted that October 1 is the lowest level of membership for every fiscal year because it is the day that any memberships that were not renewed become lapsed. Significant growth is realized throughout the following 12 months as additional members renew, and new members are received. The potential growth remains significant and NCWM continues to enhance programs and services that add value to membership.

Annual Membership Totals

Year / Type	June 2019	June 2018	June 2017	June 2016	June 2015	June 2014	June 2013	June 2012	June 2011
Associate	768	780	817	803	806	802	818	842	813
Foreign Associate	96	90	87	89	76	64	50	58	62
Total Associate	**864**	**870**	**904**	**892**	**882**	**866**	**868**	**900**	**875**
State Government	805	696	658	675	665	603	558	589	567
Local Government	464	479	474	492	491	492	486	487	495
Total Active	**1269**	**1175**	**1132**	**1167**	**1156**	**1095**	**1044**	**1076**	**1062**
NIST	15	15	16	14	16	16	16	16	16
Other Federal Government	10	11	10	11	11	9	10	11	11
Foreign Government	14	16	14	14	13	13	13	14	14
Retired	232	225	222	215	219	207	198	195	202
Total Advisory	**271**	**267**	**262**	**254**	**259**	**242**	**237**	**236**	**243**

Grand Total	**2404**	**2312**	**2298**	**2313**	**2297**	**2203**	**2149**	**2212**	**2180**

Annual Membership Totals as of June 30, Each Year

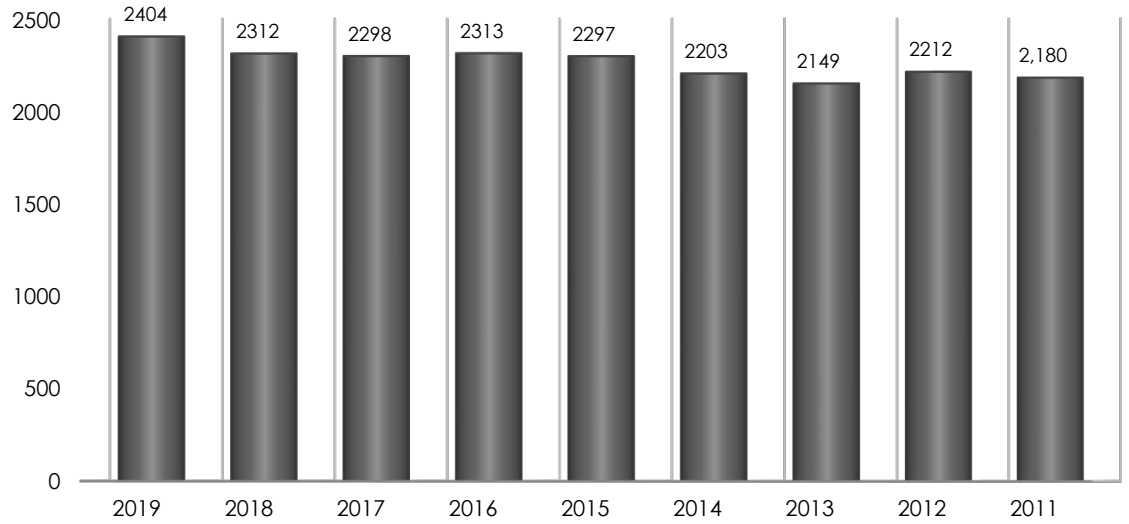

ACT-2 I Meetings

The 104th Annual Meeting will be held at the Hyatt Regency Hotel in Milwaukee, Wisconsin. This hotel is in the heart of downtown Milwaukee on the waterfront with dozens of restaurants and shops in walking distance. It is just 10 minutes from the airport. For more information about the 104th Annual Meeting, go to **www.ncwm.com/meetings** or contact Ms. Elisa Stritt, NCWM Office Manager, at (402) 434-4872 or **elisa.stritt@ncwm.com**.

In January 2020, NCWM will hold the Interim Meeting at the Mission Inn Hotel, Riverside California. Riverside is a quaint, lovely downtown with plenty of restaurants. The historic Mission Inn is stunning and will proved a unique and memorable experience. For more information about this meeting, contact Ms. Stritt, NCWM Office Manager, at (402) 434-4872 or **elisa.stritt@ncwm.com**.

Interim Meetings:

- January 26-29, 2020 The Mission Inn Hotel & Spa, Riverside, California
- January 10-13, 2021 Sirata Beach Resort & Conference Center, St. Petersburg, Florida

Annual Meetings:

- July 14-18, 2019 104th Annual Meeting: Hyatt Regency Hotel, Milwaukee, Wisconsin
- July 12-16, 2020 105th Annual Meeting: Hotel Murano, Tacoma, Washington
- July 18-22, 2021 106th Annual Meeting: Hyatt Regency Hotel, Rochester, New York

The Board of Directors strives to plan meetings in locations that have reasonably priced airline service and are within government per diem rates. The board also evaluates locations and bids from hotels based on their ability to offer comfortable rooms, quality meeting space and a variety of nearby entertainment and dining options.

ACT-3 I Participation in International Standard Setting

Dr. Charles Ehrlich, NIST OWM, provided a report during Open Hearings of the 2019 NCWM Annual Meeting. A report is also included as an appendix to this agenda of the Board of Directors. (See Appendix A.) The Board of

This publication is available free of charge from: https://doi.org/10.6028/NIST.SP.1253

This publication is available free of charge from: https://doi.org/10.6028/NIST.SP.1253

Directors expresses appreciation to Dr. Charles Ehrlich for his report and for the important efforts of the NIST Office of Weights and Measures around the world.

See the NTEP Committee Agenda for additional reports on NCWM's involvement internationally, including the Mutual Recognition Arrangement (MRA) with Measurement Canada and the OIML Certificate System (CS).

ACT-4 I Associate Membership Committee Activity

Approximately 35% of NCWM membership are Associate members. The Associate Membership Committee (AMC) is organized in accordance with the Bylaws of the National Conference on Weights and Measures, Inc. In addition, AMC operates by its own Bylaws which are available on the Committee pages of **www.ncwm.com**. AMC meets at least 2 times per year in conjunction with NCWM Interim and Annual Meetings and all are invited to attend. It consists of between 5 and 10 members who, amongst themselves, elect officers to serve as Chair, Vice-Chair, and Secretary/Treasurer. See Appendix B for information on current members and officers.

AMC has established a reputation of promoting and improving NCWM and has demonstrated its desire to improve understanding of weights and measures activities in public and private sectors.

The NCWM membership dues for Associate members of $90 are $15 higher than that for Active or Advisory members. The extra $15 is not for NCWM, but rather is placed in a separate account referred to as the AMC Fund. The AMC has discretion to allocate the funds in various ways. One means of allocating these funds is to provide grants in support of weights and measures training. The Committee receives applications and awards training grants from the AMC fund in accordance with their "Guidelines for Selection and Approval of Training Funds" which are posted on the Committee's webpage on **www.ncwm.com**. Downloadable applications for training grants and reimbursement forms are also available at this site.

The criteria to receive AMC funds for training are as follows:

1. Funding request forms that are complete, specific and detailed will receive priority attention for approval. Based on the degree of missing or ambiguous information provided, individual requests may not be given any consideration during the AMC review process pending further clarification.

2. Training requests that benefit higher numbers of participants are generally preferred over those for fewer or single-person benefit. Multi-state training that encourages uniformity will also be given priority consideration.

3. In general, attending meetings such as NCWM Annual Meetings, Interim Meetings or regional associations meetings will not be considered training.

4. As a lower priority, requests for the purchase of training materials will be considered, but requests for purchase of assets (such as projectors) will not.

5. Reasonable funding for travel and expenses will be considered if it is necessary to acquire an "expert trainer" that would benefit a high number of weights and measures officials. This will be an option when qualified volunteers are not available.

The goal of the AMC is to exhaust the funds annually. Regulatory agencies are encouraged to make use of these funds to improve training opportunities and the expertise of inspection personnel.

AMC members are also looking for new, perhaps innovative ways to play a more effective role in the NCWM structure to further improve the organization.

The AMC met during the 2019 NCWM Annual Meeting on Wednesday morning, July 17 at 8:00 a.m. All annual meeting attendees, especially NCWM Associate members, are encouraged to attend AMC Meetings. (See Appendix B for the AMC Meeting Draft Minutes from July 2018.)

This publication is available free of charge from: https://doi.org/10.6028/NIST.SP.1253

ACT-5 I Task Groups, Subcommittees, Steering Committees

Focus Groups, Task Groups, Subcommittees, Steering Committees:
Focus groups, task groups, subcommittees and steering committees are created by the NCWM Chairman and operate as defined in NCWM Policy 1.5.1. Subgroups Supporting the Work of the Organization. A task group is given a specific charge and it reports to the appropriate NCWM standing committee. A task group will disband at the completion of its assignment. A subcommittee is charged with ongoing responsibilities in support of a standing committee in a specific field of expertise. A steering committee is charged with unbiased fact-finding that will assist NCWM membership in decision processes for difficult issues. A steering committee will disband upon completion of its specific charge.

NCWM offers resources to these task groups and subcommittees including meeting space at Interim and Annual Meetings, conference calling and web meeting services, group email services, a dedicated web page for posting and archiving documents related to their work, and broadcast e-mail services to reach targeted audiences. Additionally, NIST OWM has provided technical advisors and web meeting forums. These tools enable year-around progress of task group and subcommittee work.

Because NCWM task groups and subcommittees are part of the NCWM organizational structure and report directly to its standing committees, their proposals may possibly appear in NCWM Publication 15 without first being vetted through a regional association. Any such proposals are properly vetted through the open hearings of NCWM.

The Promotional Toolkit Task Group reports to the Board of Directors. Among the activities of this group, it has developed 5 videos, each showcasing inspection activities in the supermarket, scale inspections, retail motor fuel dispenser inspections, motor fuel quality and checking the net contents of packaged goods. Mr. Stephen Benjamin (North Carolina) reported that efforts will be underway in 2019 to produce additional videos. Future topics include vehicle tank meter inspections, linking laboratory metrology to the field, LPG meter inspections and grain moisture meters.

The State Outreach Task Group also reports to the Board of Directors. As part of their work, Mr. Hal Prince (Florida) has volunteered the resources within his agency to develop promotional material that would explain the value of membership and participation.

At the 2019 NCWM Annual Meeting, Chairman Gurney announced formation of a "Field Reference Standards Task Group" to be chaired by Mr. Jason Glass (Kentucky). This task group will report to the Specifications and Tolerances Committee and is charged with developing the following items contained in the S&T Committee agenda: GEN-3, Block 1, Block 2, LPG-3, and MFM-5.

Reporting to the Board of Directors:

Promotional Tool Kit Task Group:
Chair
Mr. Stephen Benjamin
North Carolina Department of Agriculture
Raleigh, NC 27699
Phone: (919) 707-3225
Email: **steve.benjamin@ncagr.gov**

This publication is available free of charge from: https://doi.org/10.6028/NIST.SP.1253

Cannabis Task Group:

Chair
Mr. James Cassidy
City of Cambridge, Massachusetts Weights and Measures Department
831 Massachusetts Drive
Cambridge, MA 02139
Phone: (617) 349-6133
Email: **jcassidy@cambridgema.gov**

State Outreach Task Group:

Chair
Mr. Brett Gurney
Utah Department of Agriculture and Food
P.O. Box 146500
Salt Lake City, UT 84114-6500
Phone: (801) 538-7458
Email: **bgurney@utah.gov**

Reporting to the Laws and Regulations Committee:

Fuels and Lubricants Subcommittee:

Chair
Dr. Bill Striejewske
Nevada Division of Measurement Standards
405 S 21st St.
Sparks, NV 89431
Phone: (775) 353-3792
Email: **wstriejewske@agri.nv.gov**

Packaging and Labeling Subcommittee:

Chair
Mr. Christopher Guay
Procter and Gamble Co.
One Procter and Gamble Plaza
Cincinnati, OH 45202
Phone: (513) 983-0530
Email: **guay.cb@pg.com**

Reporting to the Specifications and Tolerances Committee

Credit Card Skimmer Task Group:

Chair
Mr. Hal Prince
Florida Department of Agriculture and Consumer Services
2360 Lakeview Avenue
Clermont, FL 34711
Phone: (850) 921-1570
Email: **harold.prince@freshfromflorida.com**

This publication is available free of charge from: https://doi.org/10.6028/NIST.SP.1253

Point of Sale System Tare Task Group

Chair
Loren Minnich
Kansas Department of Agriculture
1320 Research Park Dr.
Manhattan, KS 66502
Phone: (785) 209-2780
Email: **loren.minnich@ks.gov**

Weigh-in-Motion Vehicle Scale Task Group:

Co- Chair
Mr. Alan Walker
Florida Bureau of Standards
6260 Buckingham Road
Fort Meyers, FL 33905
Phone: (850) 274-9044
Email: **alan.walker@freshfromflorida.com**

Co- Chair
Mr. Tim Chesser
Arkansas Bureau of Standards
4608 West 61st Street
Little Rock, AR 72209
Phone: (501) 570-1159
Email: **tim.chesser@aspb.ar.gov**

Field Reference Standards Task Group

Chair
Jason Glass
Kentucky Department of Agriculture
107 Corporate Drive
Frankfort, KY 40601
Phone: (502) 573-0303
Email: **jason.glass@ky.gov**

Reporting to the Professional Development Committee

Safety Subcommittee:

Chair
Ms. Julie Quinn
Minnesota Weights and Measures Division
14305 South Cross Drive
Suite 150
Burnsville, MN 55306
Phone: (651) 539-1555
Email: **julie.quinn@state.mn.us**

ACT-6 I Regional Association Activities

2019 Meetings

WWMA Annual Meeting
September 8-12, 2019
Park City, UT
Contact: Brett Gurney: **bgurney@utah.gov**

CWMA Interim Meeting
October 21-23, 2019
Springfield, IL
Contact: Sherry Turvey: **sherry.turvey@kda.ks.gov**

This publication is available free of charge from: https://doi.org/10.6028/NIST.SP.1253

SWMA Annual Meeting
October 6-9, 2019
Knoxville, TN
Contact: Ed Coleman: **ed.coleman@tn.gov**

NEWMA Interim Meeting
October 15-17, 2019
Norwich, CT
Contact: James Cassidy: **james.cassidy@state.ma.us**

SPB – Strategic Planning, Policies, and Bylaws

SPB-1 I Strategic Planning

The Board of Directors is engaged in strategic planning with the assistance of LBL Strategies, a professional consulting firm. The process is not yet completed, but the overarching goal will be 5,000 members by 2025. He shared the following new NCWM Mission and Vision statements:

Mission	Vision
Ensuring equity and uniform standards in a changing marketplace	**Making every marketplace transaction fair and equitable**
We develop uniform and equitable weights and measures standards to: ▪ Promote commerce and fair competition by leveling the playing field ▪ Ensure consumers "get what they pay for" ▪ Foster confidence in marketplace transactions ▪ Advance economic growth	We strive to: ▪ be the think-tank for advancing measurement innovation standards ▪ become a world-leading measurement standard-setting organization ▪ make the world a fairer place to transact business

More planning sessions will take place this fall, and the Board will provide more details at the 2020 NCWM Interim Meeting in January.

SPB-2 I Improve the NCWM Standards Development Process

Source:
NCWM Board of Directors (2016)

Purpose:
Assess the NCWM standards development process to determine ways to improve efficiency and participation.

Background/Discussion:
In January 2016, then NCWM Chairman Mr. Jerry Buendel formed a Charter Team and set out four phases in developing recommendations to improve the standards development process. The Charter Team evaluated the NCWM's existing process and outlined its strengths and weaknesses and reported back to the Board of Directors in July 2016. The team identified potential changes to existing NCWM processes and considered their impact on operation of regional associations, NIST, NCWM governance and others to provide adequate regulations to users on a timelier basis.

The Charter Team has offered two concepts for consideration by the Board. Concept 1 is a series of recommendations to improve our existing process for standards development. Some of those recommendations have already been put

This publication is available free of charge from: https://doi.org/10.6028/NIST.SP.1253

in place while others will require further discussion. Concept 2 is to hold voting sessions at both, the January and July meetings of NCWM.

Concept 1: Improving the Current Model

- Better controls of time for presentations and comments during open hearings
- Managing testimony on Informational, Assigned and Developing items
- Reformatting of Publications 15 and 16 by grouping similar items
- Limitations on the ability to carry over items to the next year
- Increased emphasis on committee training
- Increased structure for subgroups such as task groups
- Regional committee training
- Improved quality of new proposals and the evaluation of them by regional associations.
- Improved committee reports that provide concise summaries and rationale

Concept 2: Voting Twice Each Year

- Two regions receive new proposals in the fall and the other two receive new proposals in the spring
- No item could come to a vote before all 4 regions have reviewed
- Items that carry over would only wait 6 months instead of 12 for further consideration.
- Length of committee agendas would be reduced through more frequent voting.

The recommendations contained in Appendix C of the Board Report from the Charter Team will be considered as part of the strategic planning process and these two items may be merged in the future. Mr. Ross Anderson, retired, expressed appreciation for the flexibility to allow a developing item to be upgraded to informational status by a committee as late as December based on new information received from the developer. He believes items should not be brought to a vote until a consensus has been reached as opposed to just requiring a majority. Mr. Kurt Floren, Los Angeles County, California requested serious consideration of the recommendation to vote twice per year. This would require a vote of the membership to amend the bylaws. Further discussion addressed the need to ensure that all regions have the chance to vet proposals and that an item not be adopted until it has been addressed in at least 2 national meetings.

SPB-3 I Publications 15 and 16 Committee Report Formats

Source:
Committee Development Focus Group (2019)

Purpose:
Improve committee report formats to be more consistent and concise in how detail is provided for agenda items without sacrificing relevant content.

Item Under Consideration:
Adopt the following format for agenda items of the NCWM Standing Committees and Board of Directors for proposals to amend NIST Handbooks 44, 130 and 133, NCWM bylaws and policies, and NTEP Publication 14 Administrative Policy.

[Item No.] [Status] [Title]

This publication is available free of charge from: https://doi.org/10.6028/NIST.SP.1253

Source:
[Organization and year introduced into NCWM's agenda]

Purpose:
[Concise statement of intent, such as problem being fixed]

Item under Consideration:
[Proposed Language]

Previous Action:
(e.g.) 2016: Informational
2017: Voting – Returned to Committee
2018: Voting

Original Justification:
[From the Form 15]

Arguments in Favor:

Regulatory:
- A
- B
- C

Industry:
- A
- B
- C

Advisory:
- A
- B
- C

Arguments Against:

Regulatory:
- A
- B
- C

Industry:
- A
- B
- C

Advisory:
- A

- B
- C

Item Development:
[Explain any changes made to the original proposal and committee recommendations.]

Regional Associations' Comments:
[Refresh each year based on regional reports]

Background/Discussion:
Each fall, NCWM Conducts a Committee Development Meeting for standing committee chairs, newly appointed committee members, and NIST technical advisors. At the 2017 Committee Development Meeting, the committee chairs decided to form a focus group with the Executive Director to address some of the topics of that meeting. Participants were Ms. Lori Jacobson (South Dakota), Mr. Ethan Bogren (Westchester County, New York), Mr. Ivan Hankins (Iowa), and Mr. Don Onwiler (NCWM). The focus group addressed the following items:

1. Open Hearing Protocol for Committee Chairs
2. Work Session Protocol for Standing Committees
3. Proper handling of Amendments from the floor during Voting Sessions
4. Improved Format for Agenda Items

When addressing format of agenda items, the focus group began by outlining the key elements of a good report, including:

- The justification that was provided by the submitter
- Arguments received by the committee in favor
- Arguments received by the committee against
- Committee deliberation and recommendations.

Additionally, the focus group discussed and agreed upon the following considerations:

- **Chronological Development:** The focus group believes that the report should describe how the item evolved chronologically, but that it should not repeat the same comments from one meeting to another.
- **Specific Comments:** The focus group does not believe it is necessary to name each commenter. Simply include pertinent points in the report.
- **Bullet Points:** The focus group discussed benefits of providing key points in bullet point fashion to simplify review for readers.

The focus group also discussed present practice of placing "Background/Discussion" of agenda items in an appendix instead of putting that information within the agenda. The change was made in response to comments that there were too many pages of discussion to page through to see what is actually being proposed. The focus group is hopeful that a more concise presentation of the committee report will make it more acceptable to return to the previous practice.

Appendix D shows an example of an actual 2018 agenda item reformatted to fit the proposed template. The example is Item SCL-7: S.1.8.5. . Recorded Representations, Point of Sale Systems. The item was reduced from 6 pages to 4 pages using the new template. A reformatting of this significance would require review to ensure all relevant information has been retained.

By providing a more concise item format, members may be more accepting of placing the "Background/Discussion" of items in the agenda as shown in the sample format instead of in an appendix to the agenda. There was general support for this format at the 2019 Interim Meeting. However, there were requests to improve the item numbering

This publication is available free of charge from: https://doi.org/10.6028/NIST.SP.1253

system so that the item number never changes for the life of the item. Based on a recommendation from the audience, a new numbering system will be implemented in the fall 2019 whereby the item number will include the last 2 digits of the year submitted (e.g., GEN-19.1, SCL-19.2, SCL-19.3, etc.) and the number will not change through the lifecycle of a proposal.

At the 2019 NCWM Annual Meeting, the Board presented a new item numbering format that will allow an item to remain unchanged for the lifespan of the proposal as shown here:

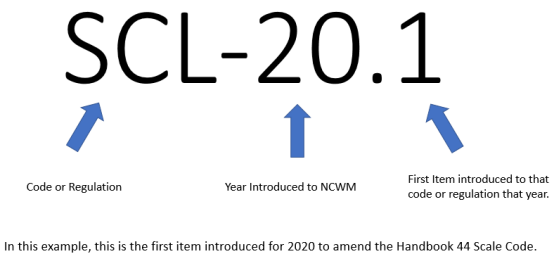

Members requested that the items continue to be presented in the order reflecting the flow of the code or regulation being amended. There was some discussion of adding additional coding to identify more specifically the section of a code or regulation being amended. In general, the body supports the new numbering system. It will not affect how item blocks are organized and efforts will be made to continue mapping how items have been moved to blocks.

SPB-4 I Bylaws, Article IX, Section 2 – Standing Committees

Source:
Board of Directors (2019)

Purpose:
Establish a Vice Chairman for standing committees and define who serves as Chair and Vice Chair.

Item Under Consideration:
Amend the NCWM Bylaws as follows:

Article IX - Committees

Section 2 - Standing Committees

The Board of Directors may create and disband standing committees in the best interests of the Corporation. As referenced in Article IX, Section 1, the Chairman makes appointments to the several special purpose committees. The current standing committees are:

1. Committee on Specifications and Tolerances;
2. Committee on Laws and Regulations; and
3. Professional Development Committee.

Membership
The membership of each of the standing committees consists of five members, at least one member from each of the four weights and measures regions, appointed by the Corporation Chairman from the ~~**active**~~**Active** membership on a rotating basis for 5-year terms, or until a successor is appointed. In addition, every fifth year the Corporation Chairman shall appoint a nonvoting Associate Member Representative (AMR) to the Committee on Laws and Regulations and the Professional Development Committee. The AMR shall be nominated by the Associate Membership Committee and shall serve a 5-year term, or until a successor is appointed.

This publication is available free of charge from: https://doi.org/10.6028/NIST.SP.1253

When it is necessary to make an appointment to any of the standing committees to fill a vacancy caused by the death, resignation, or retirement from active service by a committee member, the appointment is for the unexpired portion of the member's term.

~~**Except as noted, each standing committee annually selects one of its active members, preferably its senior member, to serve as its chairman.**~~ **Standing Committee members shall serve 5-year terms, with the Active voting member having greatest Committee seniority serving as Committee Chair and the Active member having the second-most seniority serving as Vice Chair. When the senior-most Active member of the Committee has already served as Committee Chair, the next most senior Active member who has not served as Chair and the Vice Chair should be the Committee member most likely to be Committee Chair the following year. The vice chair assists the chair during open hearings and committee work sessions by serving as the scribe and committee report developer.**

Background/Discussion:
The Board of Directors sees committee service as an opportunity for many avenues of professional growth. This includes increased technical knowledge, networking, problem solving, technical writing, public speaking and meeting facilitation. In order to get the full benefit of the experience, the Board believes that one should have a progression through the 5-year term, culminating with Committee Chairmanship.

Additionally, the Board has discussed ways to improve the process for committees in developing their Interim and Final Reports. This proposal would establish a Vice Chair who would be designated as scribe and committee report developer. All committee members would remain responsible for keeping notes in these sessions. The scribe would ensure that all relevant points are compiled and work closely with the NIST Technical Advisors in development of the report. NIST Technical Advisors have served a key role in refining and formatting the content of the reports and this proposed bylaw change does not affect that practice.

The roles of Chair and Vice Chair would ideally be those serving in their 5th and 4th years respectively. There are times when individuals are appointed to fill vacancies for those years who may not have the committee experience yet to lead in these roles. For this reason, the proposal defines the Chair and Vice Chair as the two most senior members in terms of years having served the Committee.

Concerns were expressed at the 2019 Interim Meeting with the concept of a committee vice-chair serving as a scribe. Some individuals may be quite competent for committee service but lack the keyboarding skills required to take notes during hearings and work sessions. An alternate suggestion was to assign a person to each committee who has the skills to take notes and who would also benefit in technical knowledge through exposure to the committee process. Another was to hire people through temporary employment services to serve as scribe, but lack of technical knowledge could be a problem.

The Board will continue to address the need for a Committee scribe.

FIN – Financial

FIN-1 I Treasurer's Report

NCWM operates on a fiscal year October 1st through September 30th. Budgets are set to be conservative on projected revenues and realistic on anticipated expenses. The Board continues to monitor its ability to fully implement contingency plans based on potential costs compared to reserve funds. An annual audit was conducted by Dana F. Cole & Company as an outside entity, and this provides another layer of accountability. No concerns arose from this annual audit.

The March 31, 2019 balance sheet below provides a comparison with the same time the previous year. Assets are inflated by the Associate Membership Fund. These funds are accumulated through the additional $15 dues paid by associate members and are spent at the discretion of the Associate Membership Committee in accordance with Committee Bylaws.

This publication is available free of charge from: https://doi.org/10.6028/NIST.SP.1253

Overall the NCWM's finances are in good order. This concludes the financial report.

This publication is available free of charge from: https://doi.org/10.6028/NIST.SP.1253

This publication is available free of charge from: https://doi.org/10.6028/NIST.SP.1253

ASSETS	June 30, 2019	June 30, 2018
Current Assets	$	$
Checking/Savings		
Associate Member Fund	31,343.58	30,116.84
Certificates of Deposit	1,393,252.78	1,361,672.28
Checking	22,749.73	23,322.25
Savings	162,616.97	236,912.45
Total Checking/Savings	1,609,963.06	1,652,023.85
Accounts Receivable	12,706.45	5,672.93
Other Current Assets	271,343.96	56,878.20
Other Assets	35,148.68	23,514.84
TOTAL ASSETS	**1,929,162.15**	**1,738,089.82**
LIABILITIES & EQUITY		
Liabilities		
Current Liabilities	45,533.35	48,066.71
Total Liabilities	45,533.35	48,066.71
Equity		
Designated - Associate Membership	31,343.58	30,105.21
Unrestricted Net Assets	1,507,988.11	1,433,192.74
Net Income	344,297.11	226,725.16
Total Equity	1,883,628.80	1,690,023.11
TOTAL LIABILITIES & EQUITY	**1,929,162.15**	**1,738,089.82**

Mr. Brett Gurney, Utah | Chairman
Mr. Craig VanBuren, Michigan | Chair-Elect
Mr. James Cassidy, Massachusetts | NTEP Committee Chair
Mr. Raymond Johnson, New Mexico | Treasurer
Mr. Jack Walsh, Town of Wellesley, Massachusetts | Active Membership - Northeastern
Mr. Ivan Hankins, Iowa | Active Membership - Central
Mr. Mahesh Albuquerque, Colorado | Active Membership - Western
Mr. Hal Prince, Florida | Active Membership - Southern
Ms. Rebecca Richardson, MARC-IV Consulting | At-Large
Ms. Julie Quinn, Minnesota | At-Large
Mr. Christopher Guay, Procter and Gamble | AMC Representative
Mr. Don Onwiler, NCWM | Executive Director
Dr. Douglas Olson, NIST, OWM | Executive Secretary
Mr. Darrell Flocken, NCWM | NTEP Administrator
Mr. Carl Cotton, Measurement Canada | Board of Directors Advisor

Board of Directors

This publication is available free of charge from: https://doi.org/10.6028/NIST.SP.1253

Appendix A

Report of the Activities of the International Organization of Legal Metrology (OIML) and Regional Legal Metrology Organizations

National Institute of Standards and Technology (NIST), Office of Weights and Measures (OWM)

INTRODUCTION

The OWM at NIST is responsible for coordinating United States participation in OIML and other international legal metrology organizations. Learn more about OIML at **www.oiml.org** and about NIST, OWM at **www.nist.gov/owm**. Dr. Charles Ehrlich, Program Leader of the International Legal Metrology Program, can be contacted at (301) 975-4834 by fax at (301) 975-8091 or **charles.ehrlich@nist.gov**.

Note: OIML publications are available electronically without cost at **www.oiml.org**.

Table A
Table of Contents

This publication is available free of charge from: https://doi.org/10.6028/NIST.SP.1253

Table B
Glossary of Acronyms and Terms

Acronym	Term	Acronym	Term
ANSI	American National Standards Institute	ISO	International Standardization Organization
APEC	Asia-Pacific Economic Cooperation	IWG	International Work Group
APLMF	Asia-Pacific Legal Metrology Forum	LMWG	Legal Metrology Work Group
APMP	Asia-Pacific Metrology Program	MAA	Mutual Acceptance Agreement
B	Basic Publication	MTL	Manufacturers' Testing Laboratory
BIML	International Bureau of Legal Metrology	NIST	National Institute of Standards and Technology
BIPM	International Bureau of Weights and Measures	NTEP	National Type Evaluation Program
CD	Committee Draft[1]	OIML	International Organization of Legal Metrology
CIML	International Committee of Legal Metrology	OWM	Office of Weights and Measures
CTT	Conformity to Type	PG	Project Group
D	Document	R	Recommendation
DD	Draft Document[2]	SC	Technical Subcommittee
DoMC	Declaration of Mutual Confidence	SIM	Inter-American Metrology System
DR	Draft Recommendation[2]	TC	Technical Committee
DV	Draft Vocabulary[3]	USNWG	U.S. National Work Group
GA	General Assembly	VIM	International Vocabulary of Metrology
IEC	International Electrotechnical Commission	VIML	International Vocabulary of Legal Metrology
IQ Mark	International Quantity Mark	WD	Working Draft[3]

[1] CD: a committee draft at the stage of development within a technical committee, subcommittee or project group; in this document, successive drafts are numbered 1 CD, 2 CD, etc.
[2] DD, DR, and DV: a draft document approved at the level of the technical committee, subcommittee or project group concerned and sent to BIML for approval by CIML.
[3]WD: working draft that precedes the development of a CD; in this document, successive drafts are number 1 WD, 2 WD, etc.

This publication is available free of charge from: https://doi.org/10.6028/NIST.SP.1253

Details of All Items
(In order by Reference Key)

I. Report on the Activities of the OIML Technical Committees

This section reports on recent activities and the status of work in the OIML Technical Committees (TCs), Technical Subcommittees (SCs), and Project Groups (PGs) of specific interest to members of the National Conference on Weights and Measures (NCWM). Schedules of future activities of the TC/SC Secretariats, PG Conveners, the U.S. National Work Groups (USNWGs), and the International Work Groups (IWGs) and Project Groups of the TCs and SCs are also included.

TC 3/SC 5 Conformity Assessment (United States)

Please see the new section on the OIML Certification System (OIML-CS), found at the end of this Section of Appendix A.

TC 5/SC 1 Environmental Conditions (Netherlands)

OIML D 11 *General requirements for measuring instruments - Environmental conditions* is a very important document in the OIML system and is used by all of the OIML TCs as a general reference for technical and testing requirements on all measuring instruments. Highlights of the most recent revision cycle include; expanding the terminology section, updating several testing sections to reflect the latest International Electrotechnical Commission (IEC) reference standards, and including a new environmental class ("E3") for a non-mains local source of electrical power supply. Please contact Mr. Ralph Richter at (301) 975-3997 or **ralph.richter@nist.gov**, if you would like additional information on TC5/SC1 or OIML D 11.

TC 5/SC 2 Software (Germany and BIML)

The project to revise OIML D 31 *General Requirements for Software-controlled Measuring Instruments* is nearing completion. This document serves as guidance for the software requirements in all of the OIML International Recommendations. This effort to revise D31 also now includes methods and means of software verification.

A second project group meeting in April 2018 at NMi in Dordrecht, the Netherlands where most of the significant issues were resolved. The Document passed the PG vote on the 2CD in February 2019. The document is currently out for CIML Preliminary Ballot with a July 2019 is the deadline for vote and comment.

In late 2018 and early 2019, a special subgroup convened numerous times through videoconference to discuss terminology harmonization. This group defined a new rubric from which to base various terms in the new document. This includes a subset of terms for "Measurement Result Relevant Information" and "Measurement (Process) Information"; this will distinguish data necessary for legal metrology purposes from data that is necessary for instrument operation but otherwise not legally necessary. Parties interested in these OIML software efforts should contact Dr. Katya Delak at (301) 975-2520 or **katya.delak@nist.gov**, if they would like to participate or provide input.

TC 6 Prepackaged Products (South Africa)

A new publication, OIML G 21, entitled "*Guidance for Defining the Requirements for a Certification System for Prepackages*" was just recently published. This guideline was developed to assist countries in establishing reciprocal agreements to accept the test results on prepackaged goods.

A new edition of OIML Recommendation R 87 "*Quantity of Product in Prepackages*" (equivalent to NIST Handbook 133 "Checking the Net Contents of Packaged Goods") was also recently published. This new edition includes a comprehensive overhaul of the statistical requirements and sampling plans. The U.S. and several other countries were successful in opposing efforts by several European Union countries to add drained weight test procedures and packaging requirements utilized in that region to the new edition of R 87. Those procedures were rejected primarily because they failed to recognize drained weight test methods that have been in use around the world for decades and which have been adopted by Codex Alimentarius.

OIML R 79 *Labeling Requirements for Prepackaged Products* has also been published. For more information or to participate in the activities of this committee, please contact Mr. Ken Butcher at (301) 975-4859 or **kbutcher@nist.gov**.

TC 8 Measurement of Quantities of Fluids (Japan)

In January 2019, Japan distributed the First Working Draft (1WD) of a revision of R 63 *Petroleum Measurement Tables* (1994) now that the corresponding ISO standard has been recently revised. The Secretariat also distributed the 1WD of a revision of R 119 *Pipe Provers for Testing of Measuring Systems for Liquids Other Than Water in Jan 2019* -- this document is important for other OIML Recommendations involving liquid measurement. Please contact Mr. Ralph Richter at (301) 975-3997 or **ralph.richter@nist.gov**, if you would like copies of any of these documents or to participate in the project to revise R 119.

TC 8/SC 1 Static Volume and Mass Measurement (United States and Netherlands)

The United States and The Netherlands became the new Co-Secretariats of TC 8/SC 1 after Germany announced that it wished to step down as Secretariat. The United States chairs the Project Groups that are revising OIML R 71 *Fixed Storage Tanks* and R 85 *Automatic Level Gages for Measuring the Level of Liquid in Fixed Storage Tanks* to add specific requirements for specialized tanks. The 2CDs of R 71 and R 85 are planned to be distributed for project group vote and comment later in 2019. The Subcommittee has discussed the importance of revising OIML R 125 *Measuring Systems for the Mass of Liquids in Tanks*, and a new project to revise R 125 has been approved by the CIML. Please contact Mr. Ralph Richter at (301) 975-3997 or **ralph.richter@nist.gov**, if you would like copies of the documents or to participate in any of these projects.

TC 8/SC 3 Dynamic Volume and Mass Measurement for Liquids Other Than Water (United States and Germany)

This subcommittee is nearing completion on a project for the revision of all three parts of R 117 *Dynamic Measuring Systems for Liquids Other Than Water*. The project fully harmonizes all three parts of the Recommendation and add new annexes to R 117 for several complete measuring systems, including: (a) measuring systems for the unloading of ships' tanks and for rail and road tankers using an intermediate tank, (b) measuring systems for liquefied gases under pressure (other than LPG dispensers), (c) measuring systems for bunker fuel, and (d) measuring systems for liquefied natural gas (LNG). The 2CD of R 117 was distributed in December 2018 and achieved 100% "yes" votes by the project group. At a March 2019 meeting in Cape Town, South Africa, the project group resolved all 70 pages of international comments received on the 2CD. The PG also developed and approved a 3CD at the meeting, incorporating all of the comment resolutions. The Recommendation will be distributed for CIML Preliminary Ballot in June 2019. If you have any questions or would like to participate in this project, please contact Mr. Ralph Richter at (301) 975-3997 or **ralph.richter@nist.gov**.

TC 8/SC 6 Measurement of Cryogenic Liquids (United States)

The Secretariat for OIML R 81, *Dynamic Measuring Devices and Systems for Cryogenic Liquids* has distributed a first committee draft (1CD) of R 81 to Project Group members and the USNWG for their review and comment. These comments have now been resolved, and a 2CD is anticipated to be distributed later in 2019. To obtain more

This publication is available free of charge from: https://doi.org/10.6028/NIST.SP.1253

This publication is available free of charge from: https://doi.org/10.6028/NIST.SP.1253

information or to participate in this project, please contact Mr. Ralph Richter at (301) 975-3997 or **ralph.richter@nist.gov.**

TC 8/SC 7 Gas Metering (Netherlands)

All three parts of OIML R 137 *Gas Meters* have been published. Extensive United States comments on the 1 CD, the 2 CD, and the DR were developed in cooperation with the measurement committees of the American Gas Association. The OIML R 137 document is especially important to the U. S. interests because the American National Standards Institute (ANSI) B 109 committee on gas measurement is using the published R 137 to create a new performance-based standard for gas meters in the United States. Please contact Mr. Ralph Richter at (301) 975-3997 or **ralph.richter@nist.gov**, if you would like to participate in these efforts or if you would like to obtain a copy of any of these gas measurement documents.

The Netherlands and Japan served as Co-Conveners on a project to revise OIML R 139, *Compressed Gaseous Fuel Measuring Systems For Vehicles* that mostly focused on ensuring that the Recommendation fully and accurately includes proper requirements and test procedures for hydrogen fuel dispensers. This standard is important to U.S. stakeholders, especially in the effort to maximize harmonization between domestic and international legal metrology requirements used for the delivery of alternative fuels. The CIML preliminary ballot passed in June 2018, and R139 received final CIML approval in October 2018. The revised Recommendation was published on the OIML website in November 2018. To obtain more information on this effort, please contact Mr. Ralph Richter at (301) 975-3997 or **ralph.richter@nist.gov**.

TC 9 Instruments for Measuring Mass (United States)

OIML R 60 *Metrological Regulation for Load Cells* (Metrological and technical requirements and Metrological controls and performance tests) was approved by the CIML in Cartagena, Columbia, in October 2017. R 60 was published early in 2018. For more information on TC 9 activities, please contact Mr. John Barton at (301) 975-4002 or **john.barton@nist.gov**.

TC 9/SC 1 Non-Automatic Weighing Instruments (Germany and France)

A new project to revise OIML R 76:2006 *Non-automatic weighing instruments* has been started. In addition to revising R 76, the project group has been requested to provide suggestions on how to best approach the verification and inspection of these kinds of measuring instruments. The first Project Group meeting was held in December 2017 in Braunschweig, Germany. Several Project Sub-Groups have been tasked with reformatting and updating the Recommendation and with developing field verification and inspection procedures for these measuring instruments. Other Sub-Groups will develop proposals for adding up-to-date software requirements and consider including new test procedures for modules. Please contact Mr. Ken Butcher at (301) 975-4859 or **kbutcher@nist.gov**, if you are interested in the effort to revise this document.

TC 9/SC 2 Automatic Weighing Instruments (United Kingdom)

A Project Group has been formed to develop a new OIML Recommendation on *Continuous totalizing automatic weighing instruments of the arched chute type.* This type of measuring instrument measures centripetal force on an arched chute. The first committee draft (1CD) of this new document was distributed in May 2018, following a teleconference meeting of the Project Group. The 2CD was distributed to the PG for vote and comment in December 2018. To receive copies of the documents concerning this project or to obtain more information on the work of this subcommittee, please contact Mr. John Barton at (301) 975-4002 or **john.barton@nist.gov**.

The Preliminary Ballot of OIML R 61 *Automatic gravimetric filling instruments* was approved by the Project Group in June 2017, and R61 received final CIML approval in October 2017. The newly revised Recommendation was published in August 2018. At its meeting in October 2018, the CIML approved a new project to revise OIML R 51 *Automatic catch-weighing instruments,* which was last revised in 2006. The proposed international effort to revise

R 51 was also announced to the NCWM. Please contact Mr. Rick Harshman at (301) 975-8107 or **richard.harshman@nist.gov**, if you are interested in the project to revise this document.

TC 17/SC 1 Humidity (China and United States)

OIML R 59 *Moisture Meters for Cereal Grains and Oilseeds* has received final CIML approval, and it was published on the OIML website in 2017. Please contact Ms. G. Diane Lee at (301) 975-4405 or **diane.lee@nist.gov**, if you would like more information on this effort.

TC 17/SC 8 Quality Analysis of Agricultural Products (Australia)

The new OIML recommendation *Measuring Instruments for Protein Determination in Grains* received final CIML approval in October 2016. It was published as OIML R 146 on the OIML website in 2017. Please contact Ms. G. Diane Lee at (301) 975-4405 or **diane.lee@nist.gov**, if you would like more information on this effort.

OIML Certification System (OIML-CS)

OIML has operated a Certificate System for OIML Type Evaluation of Measuring Instruments since 1991. The OIML Basic Publication B 3:1991 *Certificate System* (revised in 2006 and again in 2011) has underpinned the OIML Basic Certificate System, and OIML B 10:2012 *Mutual Acceptance Arrangement* (MAA) has underpinned the Mutual Acceptance Arrangement of the OIML Certificate System. The MAA provided more rigorous requirements for testing laboratories than the Basic Certificate System did. The categories of measuring instruments that were active under the MAA were load cells (OIML R 60), non-automatic weighing instruments (OIML R 76), and water meters (OIML R 49). NCWM/NTEP has participated in the MAA as a Utilizing Participant for load cells, and from January 2011 to September 2017 issued sixty-nine NTEP certificates for load cells under the MAA.

Because of difficulties encountered by the International Bureau of Legal Metrology (BIML) in adequately obtaining and summarizing peer review and/or accreditation data from the MAA test laboratories, and also to promote better awareness of the system, it was proposed that a more robust OIML Certification System (OIML-CS) be developed.

In 2015, OIML formed an Ad-Hoc Working Group (AHWG) on the OIML Certificate System that was tasked to develop a proposal that would significantly change the way that the OIML Certificate System is structured, managed and operated. This proposal included the creation of an OIML Certification System (called OIML-CS) that would be managed by a Management Committee instead of by the BIML. Advisory Committees to the Management Committee were also planned. The AHWG put its proposal forward to the CIML at its meeting in Arachon, France in October 2015, where it was approved. The AHWG was then disbanded, and a new certification system project group (CSPG) was established that prepared a draft of a proposed new framework document (OIML Basic Publication B 18:2016) establishing the OIML-CS, for voting on at the 2016 CIML Meeting (in Strasbourg, France). Prior to this CIML Meeting, a meeting of the CSPG was held (in Teddington, England) to resolve issues with the framework document, which permitted the framework document to be approved at the 2016 CIML Meeting. Also, approved at the 2016 CIML Meeting was the creation of a Preliminary Management Committee (PrMC), Chaired by Dr. Roman Schwartz. Draft Operational Documents for the OIML-CS were discussed at a meeting of the PrMC in February 2017 in Berlin, Germany. A second meeting of the PrMC was held in Shanghai, China in June 2017, where it was decided that the newly-formed Review Committee (that reviews all applicants to the OIML-CS and makes recommendations to the full Management Committee) would become part of the Management Committee. All OIML-CS documents were then approved (including the OIML-CS framework document OIML B 18:2017) at the 2017 CIML Meeting in Cartagena, Colombia.

Implementation of the OIML-CS began in January 2018. Load cells (R 60) and non-automatic weighing instruments (R 76) will enter under what is called Scheme A (an advanced level of the OIML-CS where accreditation or peer review is used as the basis for demonstrating compliance with the requirements of the OIML-CS for both OIML Issuing Authorities and Test Laboratories). Several other instrument categories (see the OIML website, **www.oiml.org**, for a complete list) will enter under Scheme B (an introductory level of the OIML-CS where "self-

This publication is available free of charge from: https://doi.org/10.6028/NIST.SP.1253

declaration" is used as the basis for demonstrating compliance with the requirements of the OIML-CS). It is anticipated that most instrument categories will transition from Scheme B to Scheme A within two years.

Mr. Cock Oosterman (NMi, Netherlands) was appointed as the Management Committee Chairperson, and Mr. Bill Loizides (CIML Member from Australia) was appointed as the Deputy. Dr. Charles Ehrlich (NIST and U.S. CIML Member) will serve on the Management Committee of the OIML-CS. Mr. Darrell Flocken (NCWM/NTEP) will serve on the Review Committee, which is now part of the Management Committee

If there are any questions about the new OIML-CS, or for more information, please contact Dr. Ehrlich at (301) 975-4834 or **charles.ehrlich@nist.gov**.

II. REPORT ON THE 53rd CIML MEETING in HAMBURG, GERMANY in OCTOBER 2018

The 53rd CIML meeting was held on 9-12 October 2018.

Following a Selection Committee process in 2018, a presentation made by the Selection Committee candidate to the CIML Members, and discussion among its Members, the CIML appointed Mr. Anthony Donnellan (from Australia) as Director of the BIML for a five-year term with effect from 01 January 2019.

Following a call for candidates in 2018 and a presentation by the candidate to the CIML Members, the CIML elected its CIML Member from the United States, Dr. Charles Ehrlich, to become the new CIML First Vice-President for a six-year term, with immediate effect.

The CIML extended the contract of BIML Assistant Director Mr. Ian Dunmill for a five-year term with effect from 15 March 2019.

The CIML welcomed Kiribati as a new Corresponding Member.

The CIML decided the following concerning the new OIML-CS Certification System in Hamburg:

- maintain R 60:2000 and R 61:2004 in the OIML Certification System,
- the category of measuring instrument covered by R 49 will transition from Scheme B to Scheme A on 1 January 2019,
- the categories of measuring instruments covered by R 51 and R 117 will transition from Scheme B to Scheme A on 1 July 2019,
- the categories of measuring instruments covered by R 46 and R 137 will transition from Scheme B to Scheme A on 1 January 2020,
- the categories of measuring instruments covered by R 61, R 85 and R 129 will transition from Scheme B to Scheme A on 1 July 2020,
- the categories of measuring instruments covered by R 21, R 50, R 75, R 99, R 106, R 107, R 126, R 134 and R 139 will transition from Scheme B to Scheme A on 1 January 2021, and
- on 1 January 2019 the categories of measuring instruments covered by R 16, R 35, R 58, R 59, R 81, R 88, R 93, R 102, R 104, R 110, R 122, R 128, R 133, R 136, R 143, R 144, R 145 and R 146 enter the OIML-CS in Scheme B and will transition to Scheme A on 1 January 2021.

The CIML approved the following Final Draft Publications:

- Revision of R 139, *Compressed gaseous fuel measuring systems for vehicles*;

This publication is available free of charge from: https://doi.org/10.6028/NIST.SP.1253

- New Document: *Guide for the application of ISO/IEC 17065 to assessment of certification bodies in legal metrology*.

The CIML approved nine new projects:

- the revision of R 51 *Automatic catchweighing instruments*;
- the revision of R 134 *Automatic instruments for weighing road vehicles in motion and measuring axle loads;*
- the revision of D 14 *Training and qualification of legal metrology personnel*;
- the revision of D 19 *Pattern evaluation and pattern approval*;
- the development of a new Recommendation on *Instruments for measuring the vehicle exhaust soot particle number (PN)*;
- the development of a new Document *Surveillance of utility meters in service on the basis of sampling inspections*;
- the development of a new Document *Petroleum measurement tables*;
- the development of a new Document *Pipe provers for testing of measuring systems for liquids*;
- the development of a new Recommendation *Ophthalmic instruments - non-contact tonometers*, or the revision of the existing R 145:2015 *Ophthalmic instruments - Impression and applanation tonometers*.

The CIML, noting the reports and advice from the Advisory Group on matters concerning Countries and Economies with Emerging Metrology Systems (CEEMS):

- Instructs the Bureau to continue its efforts to promote and participate in capacity building activities, both through the program of OIML Training Centers, and through training courses and regional activities organized by other organizations,
- Instructs the Bureau to continue to work with the constituent bodies of the International Network on Quality Infrastructure (INetQI - previously DCMAS Network), in particular the BIPM, to identify new initiatives where the OIML can make a direct contribution,
- Instructs the Bureau to continue developing the OIML website so that it provides up-to-date information on capacity-building initiatives, including training materials, and to maintain the database of experts available to contribute to such work,
- Instructs the Bureau to ensure that the further development of its systems supporting OIML technical work takes account of the need to involve CEEMS in such work,
- Instructs the Bureau to continue using the OIML Bulletin and the OIML website to facilitate the exchange of new ideas, and in particular new approaches to legal metrology,
- Requests its President, Vice-Presidents, the Chair and Vice-Chair of the CEEMS Advisory Group, the Chair of the OIML-CS Management Committee, and the Bureau to take particular account of the needs of CEEMS during involvement in activities related to Objective 5 in the *OIML Strategy* (OIML B 15:2011),
- Requests Technical Committees, Subcommittees and Project Groups to take note of the demand from CEEMS to ensure Recommendations and other publications take more account of the needs of CEEMS,
- Requests the OIML-CS Management Committee to ensure that the needs of CEEMS continue to be addressed in the further development of the OIML Certification System,
- Urges Member States to consider what support they can give to future OIML Training Centers or other initiatives aimed at assisting CEEMS, and
- Urges Member States to be ready to propose conveners for projects to produce other documents of interest to CEEMS and to take advantage of the training which is available for potential conveners.

This publication is available free of charge from: https://doi.org/10.6028/NIST.SP.1253

OIML Medals were awarded to Ms. Anneke van Spronssen (past CIML Member of The Netherlands), Mr. George Teunisse (The Netherlands), and Mr. Stephen Patoray (BIML Director).

III. Future OIML Meetings

The 54th CIML Meeting is being planned to be held 21-25 October 2019 in Bratislava, Slovakia. The 55th CIML Meeting and 16th International Conference are being planned to be held in 2020 in China (near Shanghai).

IV. Regional Legal Metrology Organizations

A meeting of the Inter-American Metrology System (SIM) General Assembly is organized annually and is the event where delegates from National Metrology Institutes of the Americas meet to discuss important issues. The past two years, the SIM General Assembly was held in Panama City, Panama (October 2017) and in Gaithersburg, Maryland at NIST in September 2018.

The first face-to-face meeting of the SIM Legal Metrology Working Group (LMWG) in over ten years was held in Cartagena, Columbia, in October 2017 in conjunction with the 2017 CIML Meeting. The new chair of the SIM LMWG, Mr. Raimundo Alves de Rezende (of INMETRO, Brazil) opened the meeting and welcomed participants. (For the past several years, the Chair of the SIM LMWG was held by Argentina and no meetings had been conducted.) Several issues of importance to the SIM countries were discussed, including: recent weights and measures training that participants felt had been successful, how the new OIML-CS certification system would affect the weights and measures programs in each country, and the problems that many programs faced concerning adequate and stable access to resources. The meeting closed with a discussion on the future needs and expectations of each of their countries. Possible next steps and planning for future training and future LMWG communication and meetings were considered. There was a good consensus for Brazil to circulate a questionnaire/survey to member countries to gather information, especially concerning training needs. Please contact Mr. Ralph Richter at (301) 975-3997 or **ralph.richter@nist.gov** for more information on SIM and the activities of the SIM LMWG.

The 25th Meeting of the Asia-Pacific Legal Metrology Forum (APLMF) was hosted by New Zealand and was held in Christchurch in November 2018. New Zealand assumed the APLMF Secretariat in 2016, and Mr. Stephen O'Brien (New Zealand's Ministry of Business, Innovation & Employment (MBIE) assumed the APLMF Presidency. Previously, the People's Republic of China held the Presidency and the Secretariat of APLMF for several years.

The main objectives of APLMF are to coordinate regional training courses in legal metrology and to provide a forum for exchange of information among legal metrology authorities. APLMF activities have been facilitated through its seven work groups. A meeting of the APLMF Working Groups (WGs) was held on the day prior to the APLMF meeting. The most active WG has been the Working Group on Training Coordination. Because of the importance of the training mission to APLMF, this WG has now become a permanent part of the APLMF Secretariat (instead of a separate WG). The results of a recent APLMF survey clearly indicated that the more than 20 courses conducted by APLMF in the last 10 years were highly valued by the member economies, promoted harmonization in the Asia-Pacific region, and frequently led to revised/improved legislation and regulations in the member economies.

A significant joint project entitled "Metrology Enabling Developing Economies in Asia" (MEDEA) has been conducted over the past several years by APLMF, the Asia Pacific Metrology Programme (APMP) and the Physikalisch-Technische Bundesanstalt (PTB). This project has been managed by PTB and is primarily funded by Germany. The project aims to foster and further develop the capabilities of the APLMF and the Asia-Pacific Metrology Program (APMP) to support developing economies in the Asia-Pacific region, to promote metrology systems within developing economies, and to strengthen the metrology systems/infrastructure within developing economies.

Please contact Mr. Ralph Richter at (301) 975-3997 or **ralph.richter@nist.gov** for more information on APLMF and the 2019 APLMF Annual Meeting which is being planned to be hosted by Vietnam.

This publication is available free of charge from: https://doi.org/10.6028/NIST.SP.1253

This publication is available free of charge from: https://doi.org/10.6028/NIST.SP.1253

THIS PAGE INTENTIONALLY LEFT BLANK

Appendix B

Associate Membership Committee (AMC) Agenda and Draft Meeting Minutes

Mark Flint, Chair
Archer Daniels Midland

Table A
Table of Contents

Agenda

1. Call to Order
   2. Approval of Meeting Minutes
   3. Financial Condition
   4. NCWM Industry Representative Reports
      (a) Board of Directors Report
      (b) Professional Development Committee Report
      (c) Laws and Regulations Committee Report
   5. AMC Fund Disbursement Requests
   6. Filling Vacant Positions
   7. Old Business
   8. New Business
   9. Adjournment

This publication is available free of charge from: https://doi.org/10.6028/NIST.SP.1253

This publication is available free of charge from: https://doi.org/10.6028/NIST.SP.1253

Associate Membership Committee (AMC)
Annual Meeting Minutes

Call to Order

Secretary Ron Gibson called the meeting to order at 8:00 a.m.

In the Absence of Committee Chair and Vice Chair, Bob Murnane volunteered to run meeting

Minutes

A copy of the January 2019 meeting minutes was distributed. These minutes were reviewed, and a motion was made by Bob Murnane to approve the minutes as written. With no further discussion the minutes were approved unanimously.

Financial Condition

a) AMC has a total of $31,331.82 available

b) There are $12,877.50 in pending approved payments

c) Toolkit Task Group

d) NEWMA: NIST Handbook 133 133

e) New York State Weights and Measures Association

f) Kansas: VTM/Loading Training

g) NIST: C-RMAP

h) Michigan: Motor Oil Training

i) $18,454.32 is available for consideration of new or amended applications

j) Not Yet Approved Applications: New York State Weights and Measures Association June 2020

k) Motion to approve financial statement. Motion approved by unanimous vote.

Board of Directors Report

Mr. Chris Guay (Associate Membership Representative and NCWM Board of Directors) gave a report concerning BOD activities. A few of the items are repeated below.

- Ms. Julie Quinn has retired from Minnesota and resigned from the NCWM Board's At-Large position.
- Ms. Shelly Miller (Wisconsin) has been named to complete the rest of the At-Large term starting at the end of the 2019 Annual Meeting.
- Ms. Georgia Harris retired from NIST on June 22 after working over 29 years at OWM.
- NIST has started delivering W&Ms field training via webinar, with sessions on Packaging & Labeling and Price Verification conducted in 2019 and a NIST Handbook 133 session planned for later this year.
- NIST is changing the Federal Register notices it publishes regarding NCWM meetings to make it clearer that NIST they can propose and take positions on items.
- New BIML Director is Anthony Donnellan (from Australia) replacing Steve Patoray for a 5 year term.
- New NTEP position has been filled and will be announced within the next month.

This publication is available free of charge from: https://doi.org/10.6028/NIST.SP.1253

- New NCWM website will be rolled out either in September or January (don't want to rollout during the prime NTEP registration timeframe). Website needed to be rebuilt since service from the previous host was becoming more difficult/expensive.
- Board is working on surveys on metrics of Weights and Measures programs (being led by Oregon) and fuel programs (being led by California). Data will be available to members.
- NCWM will reach out to accreditation bodies to look at ways to accredit our certification programs.
- Western Meeting: (September 8-12, 2019) Park City, Utah
- Southern Meeting: (October 5-9, 2019) Knoxville, Tennessee
- Central Interim: (October 21-23, 2019) Springfield, Illinois
- Northeast Interim: (October, 2019) Connecticut

Professional Development Report

- One item that came up was the impediment imposed by requirement for proctor and ways that could get around that. There were several good suggestions made, including using an external commercial learning center of some type as a partner or taking advantage of existing state or federal organizations that have testing processes in place and borrowing their process.
- Another thing that came up there was the survey on the exams and I think we've all kind of reached an agreement on what that survey is going to look like. There will be two areas where a test or exam taker can add text comments, one on the test content and one on the process of taking that there.
- Ms. Julie Quinn, retired from Minnesota, asked if there might be some other way to have a prerequisite for the advanced classes as people that are obviously very qualified. So I can take the basic before they can take the advanced courses for niche.
- Ms. Michelle Wilson brought up that external trainers are critical to being able to provide training to make sure that we have some way to certify them as, as qualified trainers.
- Review of the organization processes in the certificate system was offered as an idea, a session on diving into new innovations or new areas of metrology, or inviting a specific new industry member.
- There was one comment that, uh, if we're going through the effort of, of observing daily routines and, and recommending best practices for those daily routines that we need to make sure we have some way to communicate that larger group shouldn't be just one jurisdiction. Doing that study and making those observations and making corrections suggestions or the way.

AMC Fund Disbursement Report

New funds requests have been received. New York State Training for June 2020 for $4,000.

Current Standing Committee Representatives

- Mr. Chris Guay (Procter Gamble) represents the AMC on the Board of Directors. His term expires July 2020.
- Mr. James Pettinato (FMC Technologies Measurement Solutions, Inc.) represents the AMC on the Professional Development Committee. His term expires July 2023.
- Mr. Prentiss Searles (API) represents the AMC on the Laws & Regulations Committee. His term expires July 2022

Old Business

None to report.

New Business

- Voting for Funding for New York State Training for June 2020 for $4,000
- Motion to approve funding for New York funding. Motion approved by unanimous vote.

Adjournment

With no further new business, Bob adjourned the meeting at 8:52 a.m.

Respectfully submitted,
Ron Gibson, Secretary, AMC

AMC Members and Officers Effective 07/17/2019:

- Chair: Mark Flint
- Chair:Bob Weise
- Sect/Treas: Ron Gibson

Members

Bob Weise	2020
Ron Gibson	2020
Mark Flint	2020
Rich Shipman	2020
Christopher Guay	2020
Robert Murnane:	2023
Prentis Searles	2022
David Calix	2023

Attendance

Name	Affiliation		Name	Affiliation
Bill Callaway	Crompco		Richard Suiter	Richard Suiter Consultants
Jim Pettinato	Technic FMC		Jay Lubecki	City of Milwaukee
Michael Gaspers	Smithfield Foods		Randy Perez	City of Milwaukee
Kornell Gallon	Zennor USA		Rob Kieser	City of Milwaukee
Greg VanderPlatts	State of Minnesota		Mike Otzelberger	City of Milwaukee
Alan Walker	State of Florida		Richard Shipman	Rice Lake Weigh Systems
Marc Buttler	Emerson		Rachelle Miller	State of Wisconsin
Brent Price	Gilbarco Inc		Jim Hewston	JA King
			Rebecca Richardson	M4/NBB

This publication is available free of charge from: https://doi.org/10.6028/NIST.SP.1253

This publication is available free of charge from: https://doi.org/10.6028/NIST.SP.1253

Appendix C

Report of Team Charter to the Chairman

INTRODUCTION

The NCWM Charter Team is charged with proposing changes to the operation of the National Conference on Weights and Measures (NCWM) so that standards can be developed and published in a timelier manner. This report proposes two concepts for the future operation of the Conference. The first concept is making improvements and policy changes to the traditional annual meeting and voting cycle. The second concept is voting twice a year. Advances in technology, new products or services and, the need to rapidly publish regulations has generated a demand for speedier code development. The conference and its leadership are constantly striving to improve operations to meet the NCWM mission "To advance a healthy business and consumer climate through the development and implementation of uniform and equitable weights and measures standards using a consensus building process."

The first Charter Team, Team One, was launched in November 2015 and charged with examining the current processes of standards development, identifying stakeholders and their respective roles and to explore the operation of other standard setting organizations. They completed their work in July 2016 and presented a report that identified eight issue areas that require practical solutions. Those issue areas are shown on pages 8 and 9 of this report. Team One also proposed the Conference meet and vote twice a year instead of the traditional annual meeting and voting cycle.

A second CharterT, Team Two, was launched in July 2017 to develop at least two concepts for consideration by the Board of Directors. The team was made up of some of the same members of the first team and others were added due to attrition. This team began by reviewing the report published in July 2017 and determined that they would propose solutions to the eight issue areas identified by Team One and review the twice a year meeting proposal.

This publication is available free of charge from: https://doi.org/10.6028/NIST.SP.1253

CONCEPT 1 - IMPROVEMENTS AND POLICY CHANGES TO THE CURRENT MODEL

NCWM Open Hearings – Presentations and Testimony

NCWM open hearings must be more structured and disciplined to promote effective and efficient consideration of the items before the Conference. This section addresses Conclusion 5 and 6, Report of Team Charter to the Chairman National Conference on Weights and Measures July 2016. (See pages 8 and 9 of this report)

Some presentations and testimony during the open hearings take a large amount of time. Committee chairs regularly approve technical presentations and provide time limits in advance of the open hearing. The presentations are valuable in explaining complex items and generate further testimony and questions. However, the presenters exceed their time limits. In other instances, testimony is extended because the same people come to the mic time after time to provide more information or to rebut a previous speaker. The lengthy hearings reduce the amount of time the committees have to work on their items during their work sessions. Often Committees work late into the night and miss out on participating in other Conference activities.

Recommendations:

- Presentations given at NCWM open hearings be strictly limited to ten minutes with no exceptions. We suggest NCWM provide a timer so at least the presenter and committee chair would know how much time remains.
- Adopt a policy that limits the amount of time and the number of times a speaker can testify on an item during open hearings. The team recommends a limit of two trips to the mic during discussion of an item - once for initial testimony and once for a follow-up. An exception could be made, at the chair's discretion, for committee members to ask additional questions of a speaker.
- Members should be required to wait until all of those that rise to testify have spoken before they can return to the microphone for additional comments.
- Individuals giving presentations be required to submit their presentations at least 24 hours in advance of the hearing.
- Individuals proposing changes to language must be submitted to the committee in writing before the beginning of open hearings or before the committee work session.

Developing and Informational Items – Testimony and Management:

The Committees at times take open testimony on developing and informational items during the hearings. There are occasions when time is spent hearing testimony or presentations on these items. This section addresses Report of Team Charter to the Chairman National Conference on Weights and Measures July 2016, Conclusions 5 and 6. (See pages 8 and 9 of this report)

Recommendations

- Developing and Informational items be limited to a report from the assigned subgroup and/or submitter as appropriate at the Interim and Annual. The presenter should be limited to 10 minutes with no exceptions.
- Developing and Informational items be reported on only by the assigned subgroup, submitter or submitter's representative at the regional meetings. Regional associations should consider limiting presentations to 15 minutes as a means of informing regional members and as preparation for those attending the NCWM meetings. Reports at the regionals may be filed in writing or heard through teleconference or web meeting.
- All meetings of the subgroups and items being worked be posted on the conference schedule and NCWM website.

This publication is available free of charge from: https://doi.org/10.6028/NIST.SP.1253

- Promote and encourage task group meetings at the regional conferences. NCWM should support the regionals with teleconferencing and web meetings to enable this activity.
- The NCWM Board of Directors develop an "Assigned" status for items. Items assigned could be managed under different time limits and process rules to promote rigorous discussion and well-developed items.
- Developing items not acted on by a task group or submitter for one full NCWM annual meeting cycle be withdrawn from the agenda.

NCWM Publication 15 and 16 Format – Grouping Similar Items:
Currently, items are placed in NCWM Publication 15 and 16 on the Specification and Tolerance Committee and the Laws and Regulation Committee agendas in a manner that aligns the items with the respective sections of the NIST Handbooks. This often separates items addressing similar or related topics and the items may be interdependent. Over the past few years the committees batched the items during the open hearings and voting sessions in an effort to effectively present the issues to the members and to make the hearing and voting process more efficient. The batching efforts are successful to some extent however, members have a difficult time paging through the publications and keeping up with the testimony during the hearings and voting sessions. The Charter Team discussed grouping similar items in Publication 15 and 16 in a more logical manner and NEWMA successfully used a grouping scheme during their Interim Meeting with success.

The NCWM Board of Directors considered changing the format of NCWM Publication 15 and 16 to incorporate this recommendation and agreed to implement it on a trial basis for the 2018 edition of Publication 15. The Board expects that there will be comments and suggestions to improve on the first version of this new format. This new format should also provide benefit to the regional associations, as well as the NIST Technical Advisors.

The Charter Team recommends that NCWM consult with the five active Committee members when formatting new proposals to determine whether they should be grouped. Submitters of new proposals may also recommend that their items be grouped.

Items not passed during Annual Voting Session – Elimination and Reconsideration:
Currently, Voting items that are not passed during the NCWM Annual Meeting Voting Session are automatically returned to the committee for consideration. These items take time and effort to process.

The Charter Team concluded that there should be a policy that requires the item be dropped from the agenda with some exceptions. This section addresses Report of Team Charter to the Chairman National Conference on Weights and Measures July 2016, Conclusions 1 and 2. (See pages 8 and 9 of this report)

Recommendations:

- Items that do not receive the required votes to pass or fail drop off the agenda at the conclusion of the meeting. However, the Committee may choose to carry the item forward if a majority of the Committee voted to carry the item forward. The Committee would be required to make a decision on carrying the item forward within one week of the Voting Session and communicate their decision to the membership via NCWM. The Committee would be made up of the same committee members that considered the item during the voting session. Comments would be added to the Background/Discussion section to report the decision and explain the rationale for carrying the item forward.
- Items carried forward after the annual voting session be limited to consideration for only one more year.
- Items not carried forward after a voting session may be resubmitted for consideration.

Note: These recommendations would require reconsideration if NCWM implements voting twice per year.

Joint Committee Sessions – Restructure and Repurpose

The Committee discussed the value of the Joint Committee Session held at the beginning of the Interim and Annual Meetings. The Session is intended to be a time to gather the standing committees, identify problems or special

situations and make adjustments to help the committees do their work through the week. Over the past few years this session has become a quick check in and usually there is nothing to report or discuss.

The Charter Team recommended that this session be restructured to assist Committee members by presenting some refresher training and proactively addressing problems or controversial issues. This section addresses Report of Team Charter to the Chairman National Conference on Weights and Measures July 2016, Conclusion 5. (See pages 8 and 9 of this report)

Recommendations:

- The Charter Team recommends the session be restructured and the time used for a number of other value-added activities. For example, a quick refresher on committee process and policies, leadership and facilitation, discussion of batching items, or coordinating joint hearings. Immediate topics could include guidance on using the timer, limiting presentations and how to proceed once time expires.
- The Charter Team recommends that the Fall Committee Development sessions be continued to reflect changes to committee operations and to emphasize the leadership roles of the Chairpersons. The team also recommends expanding the meeting to include all committee members, not just new members and the chairs.
- Standing committees routinely conduct business prior to the Interim and Annual meetings. Using web-based meetings, teleconferences and other electronic means to discuss and develop items in advance of the conferences. This will be a cultural shift for some members, will require technical assistance from NCWM, and will require additional time commitments of committee members.

Subgroups Supporting the Work of the Organization – Continuous Improvement

Subgroups are increasingly valuable to the success of the conference as issues require more subject matter expertise, have significant regulatory and economic impact and may require several years to fully develop. The increasing use of subgroups enables the conference to tap industry and government expertise, intensely focus on fully developing issues and keep pace with changes in the marketplace. Subgroups increase membership and participation in the conference but also place an increasing burden on key leaders and NIST staff.

The charter team recommends the conference work diligently to continuously improve subgroup operations. This section addresses Report of Team Charter to the Chairman National Conference on Weights and Measures July 2016, Conclusions 4 and 7. (See pages 8 and 9 of this report)

Recommendations:

- Each Subgroup be given a charter to guide their work. The charter must include who the team reports to, clear expectations about deliverables, available resources, deadlines and a termination date.
- Subgroup members receive training on the policies, structure, reporting relationships, leadership and facilitation. (This is addressed in NCWM Policy 1.5.1: Subgroups Supporting the Work of the Organization.)
- NCWM support subgroups by providing training, and making available conference calls, web meetings, and other electronic communications and document sharing.

Regional Standing Committees – Adding More Value

The Charter Team recognized the importance of having strong, productive regional committees. The regional organizations add value by both evaluating items and further developing the items. Subject matter experts and regulatory officials come together in an environment that enables greater in-depth discussions and thorough analysis of items.

Committees look at each item and recommend a status to the regional membership. The regional association then deliberates and approves the committee's recommendations of Informational, Developing, Voting or Withdrawn.

This publication is available free of charge from: https://doi.org/10.6028/NIST.SP.1253

The other critical function of the committees is to further develop and refine items into a final product - usually Handbook language. The items then pass onto the other regions for more discussion, development and recommendations on the status for the item.

The charter team noted that there are the inconsistencies between the regions and the products they produce. Some of the observations of the Charter Team were:

- Some members are not familiar with the goals, purpose and responsibilities of the regional Committees.
- Some members do not understand NCWM Committee, hearing and voting processes.
- Some members have not had a chance to develop the skills to chair and facilitate a committee before being put in that role.
- The committees may not have a subject matter expert or access to an expert to help make informed decisions and recommendations.
- Some Regional Committees continue to take testimony and change proposals during their work sessions.
- Some regions are thorough and diligent in working items and others are less so.
- Some regional meetings are well attended by a wide range of regulatory and industry members while others aren't.
- In some cases, submitters of items do not attend the regional or send written testimony to the Committees. In those instances, the Committees do not have any new information to act on.

This section addresses Report of Team Charter to the Chairman National Conference on Weights and Measures July 2016, Conclusion 8. (See pages 8 and 9 of this report)

Recommendations:

- Regional Committee members may benefit from training similar to the training provided NCWM Committee members.
- Regions may benefit from a Committee training and guideline publication similar to the one provided NCWM Committee members. The Western Weights and Measures Association is updating the Committee manual they use and is willing to make the manual available to the other associations.
- Regions may make it a priority to have committee members serve for several years, select members to get a Committee with a wide range of expertise and include a member from the NCWM Standing Committee to provide continuity and background knowledge that would be useful to both the Regional and National Committees.
- Regional Committees could indicate in their Committee reports when they do not have subject matter experts available to assist them in making a recommendation. In these instances, the region may simply take no position.
- New Proposals are normally submitted for the fall round of regional meetings. Presuming an NCWM Annual Meeting voting is retained, a deadline of September 1 or two weeks prior to the first regional meeting could be established that would apply to all four regions. This would place all four regions on an even footing to evaluate and make recommendations on the new proposals. Submitters of new proposals would have time from the end of the Interim Meeting to the established deadline date to fully prepare the new proposals. Regional Committees, submitters, and NCWM standing Committee members would then have sufficient time to review and prepare new proposals for the fall meetings.
- Individuals giving presentations could be required to submit their presentations at least 24 hours in advance of the hearing.

This publication is available free of charge from: https://doi.org/10.6028/NIST.SP.1253

- Individuals proposing changes to language could be required to submit them to the Committee in writing before the beginning of open hearings or before the Committee work session. This would allow regional Committee chairs to better prepare for their open hearings and work sessions.
- Regional Standing Committees could be encouraged to follow the guidelines for presentations and open hearing comments used by the NCWM Standing Committees to facilitate the open hearing process.

Proposals – Form 15. Development and Regional Conferences:

Form 15s are the first step in proposing changes to the handbooks and the process of amending the NIST Handbooks begins with consideration by the regional conferences. The Form 15s, known as proposals, come from a variety of sources. Some are submitted by long time members of the conference that have a sound understanding of the process; others are submitted by businesses and regulatory officials new to the conference with little knowledge of the process. The proposals are sometimes very well developed with supporting data, detailed amendments for the affected Handbook sections and, sometimes demonstrate collaboration with other stakeholders. Proposals are generally submitted in a timely manner; however, some are late and some are sent directly to regional Committee chairs. Because the regions meet in different months, the proposal may not be considered by one or more of the regions and in some cases not evaluated by key stakeholders. The charter team recommends the conference take measures to improve the quality and timely submission of Form 15s.

Recommendations:

- Develop minimum criteria that each form 15 meet before it can be forwarded to the regional conferences for consideration. The criteria could be in the form of a checklist and should include a description of the regulatory issue, technical details and supporting data, proposed Handbook language, a discussion of economic impact or a cost/benefit analysis, a list of affected stakeholders or industries and a summary of the stakeholder responses to the proposed change.
- Form 15s must be received by September 1 of each year with exceptions being granted only for emergency proposals in accordance with existing NCWM policy.
- Form 15s must be heard by the regional conferences and must receive at least one recommendation that the item be given voting, developmental, assigned or, informational status before it can be considered by the NCWM standing Committee.
- Encourage, support and, expect committees to begin their work well before the conferences.

Committee Reports – Concise Summaries and Rationale:

Well-written and well-structured Committee reports are essential to excellent standards development. Initially, the members use the reports to help them determine how to vote, testify and in some instances offer changes. Members read the reports to understand the fundamental issue, gain insights about the stakeholder positions and understand how opposing views were resolved. After the standard is published in the handbook, the reports serve to document the intent and discussions and are used by jurisdictions to determine how to apply the standard. The National Committee reports can be lengthy and difficult to follow. The regional committee reports can be superficial rather than a comprehensive summary of discussions, data analysis and, rationale for their recommendations. The charter team recognizes that time constraints at the meetings, both regional and national, put a great deal of pressure on committee members to meet deadlines at the cost of quality. The first three recommendations below apply to both Regional and National Committees.

Recommendations:

- Develop aids or checklists to guide committee members in writing the reports. Some of the items to address in a checklist are:
    - Identification of the regulators, stakeholders, subgroups, NIST or other federal agencies involved in the issue.

This publication is available free of charge from: https://doi.org/10.6028/NIST.SP.1253

This publication is available free of charge from: https://doi.org/10.6028/NIST.SP.1253

    - Identification of all sections of the Handbooks affected by the changes
    - Identification of any federal statutes or regulations affected by the changes
    - Discussion of the conflicting positions and resolutions.
    - Recommendation to submit the item to a subgroup and reasons to form a subgroup.
    - Recommendation to return the item to the submitter for development
- Provide support to committees in the form of web meetings, conference calls and other logistic support.
- Consider appointing a secretary to take notes, draft addendums and do a first draft of the committee reports. The secretary should not be a standing committee member or NIST technical advisor, nor should they have a vested interest in the proposals being considered by the committee.
- Require an update be provided to the regional committees by NCWM subgroups prior to or at each regional meeting.
- Assemble a team to redesign and reformat the committee reports. The team should identify the key elements of a report, develop a format that summarizes the current proposal, so the reader can quickly understand the issue they will be voting on and that provides a history and background of the item's development.
- Host a NIST/NCWM workgroup to discuss roles and responsibilities regarding standards development and publication of reports. Clarify these roles and responsibilities for both national and regional organizations.

CONCEPT 2 – TWICE A YEAR VOTING

Change in Winter Meeting Processes – Vote at Both Summer and Winter Meetings:

NCWM's traditional annual and interim meetings would require process changes to implement a twice a year voting system. The meetings are addressed as a Summer Meeting and a Winter Meeting below. Voting would take place during each session and require attendance in person. The Winter meeting would be extended by one day to accommodate the hearings, committee meetings and voting sessions.

Recommendations:

The 2016 charter team proposed the following sequence for the NCWM and regional meetings and outlined the activities and actions for each. The 2017 charter team made some editorial changes to their recommendations.

Summer Meeting Committees will hold open hearings.

- Committees develop addendum sheets.
- Addendum sheets will include a list of all items designated for carryover and the status they will have in NCWM Pub 15. This will include Voting status items for the Winter Meeting.
- Items will be voted on by the membership.
- Within one week of the end of the Summer Meeting voting session, the committees will assess the status of any items that had been returned to committee in the Summer Meeting voting session and assign a status.
- New committee members would begin their terms upon completion of item e above.

SWMA and WWMA meet in the Fall

- Provide comment on all carryover items.
- Receive and make recommendations for status on all new proposals.

NCWM will create Publication 15

- All carryover items will have the status assigned by the NCWM standing committee following the Summer Meeting.
- All new items will be presented in NCWM Pub 15 without status. These items will be discussed and assigned a status by the NCWM standing committees in the addendum sheets at the Winter Meeting.

Winter Meeting Process. This process will be similar to the Summer Meeting. It will include a voting session and the meeting will be extended by one day. Following is the process.

- Committees will hold open hearings.
- Committees develop addendum sheets.
- Addendum sheets will include a list of all items designated for carryover and the status they will have in NCWM Pub 16. This will include Voting status items for the Summer Meeting.
- Items will be voted on by the membership.
- Within one week of the end of the Winter Meeting voting session, the committees will assess the status of any items that had been returned to committee in the Winter Meeting voting session and assign a status.

CWMA and NEWMA meet in the spring.

- Provide comment on all carryover items.
- Receive and make recommendations for status on all new proposals.

NCWM creates NCWM Pub 16.

- All carryover items will have the status assigned by the NCWM standing committee following the Winter Meeting.
- All new items will be presented in NCWM Pub 16 without status. These items will be discussed and be assigned a status by the NCWM standing committees in the addendum sheets at the Summer Meeting.

Amend bylaws and Policies to Implement Twice a Year Voting

The NCWM bylaws and policies must be changed to implement twice a year voting; the articles of incorporation would not need to be changed. Most of the changes would be to rename the Interim and Annual Meetings. Changes to bylaws require a vote of the membership and changes to policies are made by the Board of Directors.

Recommendations:
Change the bylaws and policies listed below to implement twice a year voting.

Bylaws:

- Article IV
  - Section 3 – Waiver of Registration and Membership Fees
- Article VI
  - Section 2 – Directors Eligibility, Part B.
  - Section 3 – Nominations and Elections, Parts A, B, C, D
  - Section 5 – Removal of Directors
  - Section 6 – Appointive Officials, Part B.
- Article VII
  - Section 10 – Sergeants-at-Arms

This publication is available free of charge from: https://doi.org/10.6028/NIST.SP.1253

This publication is available free of charge from: https://doi.org/10.6028/NIST.SP.1253

- Article VIII
  - Section 1 – Annual Meeting
  - Section 2 – Meetings
  - Section 3 – Special Meetings, Part B.
- Article IX
  - Section 5
    - Part C, 3. Conference Training Topics
    - Part D. Nominating Committee
- Article X – Voting System
  - Section 1
    - Part A. Official Designation
    - Part B. Composition
    - Part C, Method of Designation
  - Section 2, House of Delegates
  - Section 3, House of General Membership
  - Section 5 – Voting Rules, Part B.
  - Section 9.A. Part C (statement above chart)
- Article XI – Amendments

Policies:

- 2.1.1. Observer Fees
- 2.1.3. One-Day Registration Fee
- 2.1.4. Waived Registration Fee for Guest Speakers
- 2.1.5. Student Registration
- 2.3.1. Hospitality Suites
- 2.3.2. Event Sponsorship
- 2.3.3. NCWM Meeting Space
- 2.4.1. Committee Work Session Protocol
- 2.4.2. Training Session Topics
- 2.4.3. Retired Member Voting Privileges
- 2.4.4. Committee Work Schedules
- 2.4.5. Written Testimony
- 2.4.7. Recording Meetings 2.4.8. Transparency in Representation
- 2.6.2. Special Awards Subcommittee

This publication is available free of charge from: https://doi.org/10.6028/NIST.SP.1253

Change Publication, Administrative, Financial and Other Practices:
Adopting a twice a year voting cycle would require changes to other parts of NCWM and NIST operations. Following are a list of questions raised by Charter Team One and in some instances Charter Team Two responded with their recommendations.

Questions and Recommendations:

1. Would standards be printed twice per year or remain on an annual cycle?

   Charter Team Two recommends remaining with one printing per year. States adopt the NIST standards in various ways; some adopt by reference, some adopt through administrative rulemaking and others write the handbook provisions into administrative rules.

2. What constitutes the long-standing NCWM Annual Reports?

3. Would we have an outing at the Winter Meeting?

4. NCWM offers to pay committee travel to the Interim Meeting, but not the Annual. Would we offer to pay for both? Or the expenses for each? Or continue paying for just the Winter Meeting?

   Charter Team Two recommends that NCWM consider options for continuing support of committee member travel. **NOTE:** NCWM does not presently recoup these costs through registration fees.

5. In any case, there would be an increase in Winter Meeting registration fees to cover:

   - Added day of audiovisual fees;
   - Added day of light breakfast;
   - Added day of staff travel;
   - Added printing costs for addendum sheets.

6. Annual Business Meeting: Will this still be held just at the Summer Meeting?

7. Special Awards: Would these remain just at the Summer Meetings?

Conclusions of the Charter Team Report of July 2016:

1. Standing committee agendas include too many items. In recent years, agendas have overwhelmed committee members. Committee work sessions have become all-consuming and diminish the committee's final work product. Late night-time commitments affect committee members' morale and cause difficulties in recruiting new committee members. The existing agenda item designation system only provides guidance to the committees as it relates to the status of an item.

2. Items remain on committee agendas for indefinite periods of time. Clearly, there are agenda items that need extensive development but ***revisiting and/or voting*** on the same items on a yearly basis raises frustration and causes interested groups to question the credibility of the Conference. Interested parties have bypassed the NCWM process and have reached out to the Federal and State Governments for favorable legislation. Some states have passed "boutique legislation" to address that state's immediate need.

3. Adoption or non-adoption of agenda items by the Conference as a whole occurs just once a year. Items that are ready for a vote or have been voted on and are ready for a revote cannot be revisited until the July Annual Meeting. Voting only once a year inherently slows the approval process.

This publication is available free of charge from: https://doi.org/10.6028/NIST.SP.1253

4. Agenda items can be intensely technical and inconsistent technical knowledge of a specific item by Committee members can hinder the study of the item. Committees may not have the expertise or time to develop items, and proposal authors may not have the resources or connections to reach out to affected parties except at national meetings. The result is that items of a technical nature may not be developed adequately before reaching the committee and may return year after year without significant change because of a continuing lack of resources for development.

5. Committee Chairpersons have broad authority and control over their agendas. The tools provided to committee chairs are explained in detail during the NCWM Committee Orientation process, but we believe committee chairs do not use these tools enough in reviewing agenda content. Also, emphasis should be placed on the most efficient utilization of time outside of the NCWM meeting timeframes to work on agenda items.

6. Comments during open hearings and the voting process at times are not directed to the committees and their chairpersons, inviting "back and forth" discussions on agenda items. Although comments are strongly encouraged, "back and forth" discussions can cause unnecessary delays and can diminish the time necessary to consider "last minute" changes. As a result, an item deemed by the committee ready for a vote may be quickly "pulled back" increasing the time it remains on an agenda.

7. Subcommittees perform an important function by advising and assisting the Standing Committees on agenda specific topics. A subcommittee's recommendation and work product become an integral part of an agenda item. Subcommittee members are subject matter experts, whose expertise and background should be fully utilized by standing committees.

8. Every proposal/agenda item presented to a regional association and/or to NCWM is distinct and raises a corresponding level of interest. Determining "how long" an item takes to move through the NCWM process is difficult and is driven by the uniqueness (technical nature and the widespread effect on the marketplace) of agenda items. Data suggests that most items move relatively smoothly through the Conference approval process, but that suggestion is clearly diminished by the uniqueness of an item.

   NCWM members representing different interests have raised concerns that NCWM will not be able rise to the challenges it will confront in the 21st Century. Finding solutions to the concerns identified above will greatly assist the conference in meeting those challenges.

Mr. Jerry Buendel, Washington | Chairman & Western Representative
Mr. Harold Prince, Florida | Southern Representative
Mr. Louis Sakin, Towns of Hopkinton/Northbridge | Northeastern Representative
Mr. Robert DeRubeis, Michigan | Central Representative
Mr. Eric Golden, Cardinal Scale Manufacturing | Associate Membership
Mr. Robert Upright, Vishay Transducers | Associate Membership
Mr. Don Onwiler, NCWM
Dr. Doug Olson, NIST/OWM
Charter Team Two Committee Members

This publication is available free of charge from: https://doi.org/10.6028/NIST.SP.1253

THIS PAGE INTENTIONALLY LEFT BLANK

This publication is available free of charge from: https://doi.org/10.6028/NIST.SP.1253

Appendix D

Publications 15 and 16 Committee Report Format
Sample Item

SCL-7 V S.1.8.5. Recorded Representations, Point of Sale Systems

Source:
Kansas and Minnesota (2017)

Purpose:
Provide consumers the same opportunity, to be able to easily verify whether or not tare is taken on items weighed at a checkout stand using a POS system, which is currently afforded them when witnessing items being weighed and priced in their presence using other scales in the store.

Item under Consideration:
Amend NIST Handbook 44, Scales Code as follows:

> **S.1.8.5. Recorded Representations, Point-of-Sale Systems** – The sales information recorded by cash registers when interfaced with a weighing element shall contain the following information for items weighed at the checkout stand:
>
> (a) the net weight;[1]
>
> (b) the unit price;[1]
>
> (c) the total price; and
>
> (d) the product class or, in a system equipped with price look-up capability, the product name or code number.
>
> **(e)** ***the tare weight[1]***
>
> ***[Non-retroactive January 1, 2022]***
>
> **(Amended 20XX)**
>
> [1] For devices interfaced with scales indicating in metric units, the unit price may be expressed in price per 100 grams. Weight values shall be identified by kilograms, kg, grams, g, ounces, oz, pounds, or lb. *The "#" symbol is not acceptable.*
> *[Nonretroactive as of January 1, 2006]*

(Amended 1995 and 2005)

Previous Action:

- **2017: Voting Item returned to Committee**
- **2018: Voting Item**

Original Justification:
This proposal would benefit consumers by enabling them to see at a glance that tare is being taken on the commodities they purchase. It would also educate the public about tare and make them better and more aware consumers.

This publication is available free of charge from: https://doi.org/10.6028/NIST.SP.1253

Retailers would benefit because this proposal would aid their quality control efforts behind the counter and at the cash register. Retailers would be able to see that their employees are taking tare on packages, and that the tare employees take is the appropriate tare. For example, a meat manager would be able to spot packages of 1 lb. hamburger which had been packaged on the night shift mistakenly using the tare for family packs of chicken, just by walking down the meat counter and noticing a 0.06 lb. tare on a package size that would normally have a 0.02 or 0.03 lb. tare. The manager could also spot a 0.03lb tare on packages that should have a 0.06lb tare. Either way, the manager would be able to remove the items from the shelf and make corrections before the store or its customers were harmed. The manager would also be able to re-educate the employees responsible for the error. This improved quality control and transparency would build consumer confidence in retailers' establishments. It might even reduce the time and disruption retailers experience from official package inspections.

Package checking inspections potentially could be reduced because weights and measures officials could make risk-based assessments on the need to do package checking inspections at any given location. If an official notes that gross weights or tares are visible on all random-weight packages, and that the tares seem appropriate to the package sizes, the official may be able to skip that location and focus package checking efforts on locations where tares are absent or seem inappropriate for the package sizes. That would be more efficient for both retailers and weights and measures jurisdictions. Some retailers may not want consumers to have this information as it will allow consumers and weights and measures officials to hold them accountable and would be written proof tare was not taken when, and if, that happens.

Finally, this proposal would aid weights and measures officials investigating complaints about net contents of item by creating written proof of how much tare was taken on a given package or transaction.

Arguments in Favor:

- It is very difficult for customers at a checkout stand to determine whether or not tare has been taken on products weighed by a store cashier on POS systems that display only a gross weight when the net weight is the only weight information appearing on the sales receipt. This is especially true, she said, when there are multiple items in a customer's shopping cart to be weighed.
- Additional information is needed on the sales receipt to make it possible for consumers to ensure tare has been taken on items weighed at a POS checkout.
- Several POS devices already provide tare information on the printed receipt.
- The proposed item would provide more information for investigations of consumer complaints.
- Printing tare values on POS register receipts is a tool for regulators and store managers to audit how personnel are doing with taking tares.
- Consumers deserve to be protected.
- This is a non-retroactive requirement that impacts equipment that is installed after the non-retroactive date.
- If customers were asked if they wanted to be charged correctly they would say "yes," regardless if they knew what the term "tare" meant.
- Many grocers deliver products from the store to customers' homes and customers are not present during the weighment of these items to witness whether tare was taken or not during the transaction.
- Inspection of programmed tare values is not sufficient as this may not be the value used during the transaction.

Arguments Against:

- It would be too costly for scale manufacturers and retailers to modify software and label and receipt designs with little benefit.
- Even though the requirement would be nonretroactive for a period of time, retailers with point of sale systems and packaging scales may feel pressured to update software or purchase new devices in response to consumer demand for tare information on labels and receipts.

This publication is available free of charge from: https://doi.org/10.6028/NIST.SP.1253

- The amount of paper needed to print customer receipts may increase depending on the formatting of the information and the size of the paper being used.
- All tare weights would be required on the receipt, regardless of if it were 1 or 100 weight transactions.
- The requirement would be costly to industry (e.g., increased costs for software development, employee training, and consumer education) and additional costs would be passed on to the consumer.
- Customers have not asked for this information.
- Regulators can verify that tare values in POS systems are accurate and this would confuse consumers.

Item Development:
The original proposal applied S.1.8.5. Recorded Representation, Point-of-Sale Systems and created a new proposed paragraph S.1.9.3. Recorded Representations, Random Weight Package Labels as follows:

> **S.1.8.5. Recorded Representations, Point-of-Sale Systems** – The sales information recorded by cash registers when interfaced with a weighing element shall contain the following information for items weighed at the checkout stand:
>
> (a) the net weight;[1]
>
> ***(b) the gross weight or tare weight;[1]***
>
> (~~b~~**c**) the unit price;[1]
>
> (~~c~~**d**) the total price; and
>
> (~~d~~**e**) the product class or, in a system equipped with price look-up capability, the product name or code number.
>
> ***[Non-retroactive January 1, 20XX]***
>
> [1] For devices interfaced with scales indicating in metric units, the unit price may be expressed in price per 100 grams. Weight values shall be identified by kilograms, kg, grams, g, ounces, oz, pounds, or lb. *The "#" symbol is not acceptable.*
> *[Nonretroactive as of January 1, 2006]*
>
> (Amended 1995 and 2005)

And

> ***S.1.9.3. Recorded Representations, Random Weight Package Labels– A prepackaging scale or a device that produces a printed ticket as the label for a random weight package shall produce labels which must contain the following information:***
>
> ***(a) the net weight;[1]***
>
> ***(b) the gross weight or tare weight;[1]***
>
> ***(c) the unit price;[1]***
>
> ***(d) the total price; and***
>
> ***(e) the product class or, in a system equipped with price look-up capability, the product name or code number.***
>
> ***[Non-retroactive as of January 1, 20XX]***

At the 2017 Interim Meeting, the Committee deleted the S.1.9.3. Recorded Representations, Random Weight Package Labels because it conflicts with NIST Handbook 130 Uniform Packaging and Labeling Regulation. Additionally, the Committee agreed with comments that consumers would be better served with a consistent means for representing tare, so the option of printing gross weight or tare weight was modified to simply require tare weight.

The Committee also received a suggestion to require at some future date that the tare weight appear on displays rather than requiring the information on sales receipts. However, even if a customer is able to view the tare indication from a POS display, the committee noted that there still needs to be a paper trail of the recorded transaction information for enforcement purposes.

The submitters requested, and the committee agreed to modifications to the proposals in response to some concerns that were raised.

- Place the tare weight at the as the last information in the transaction.
- Extend the nonretroactive date to 2022 to allow more time to develop the software.

No additional changes have been made following the January 2017 deliberations.

Regional Association Comments:
WWMA: The Committee is recommending this item to be an informational item with the following changes to the purpose and text of the item copied from Appendix A, Page S&T – A24, as agreed by the S&T Committee at the 2017 NCWM Annual Meeting.

> **S.1.8.5. Recorded Representations, Point-of-Sale Systems** – The sales information recorded by cash registers when interfaced with a weighing element shall contain the following information for items weighed at the checkout stand:
>
> (a) the net weight;[1]
>
> (b) the unit price;[1]
>
> (c) the total price; and
>
> (d) the product class or, in a system equipped with price look-up capability, the product name or code number.
>
> **(e)** ***the tare weight***[1]
>
> ***[Non-retroactive January 1, 2022]***
>
> **(Amended 20XX)**

SWMA: The Committee heard comments from Ms. Tina Butcher (NIST OWM) who noted that the title of the item in the Appendix to the Committee's report still includes a reference to a part of the original proposal which would have required the tare weight to be printed on random-packed products. That portion of the proposal was removed from the proposal prior to the NCWM Annual Meeting. In addition, she noted that the submitters of the item made modifications to the proposal following the 2017 Annual Meeting. The modifications recommend extending the nonretroactive date to 2022 (rather than 2020) and moving the reference to "tare weight" to the last item in the list.

The Committee heard some comments on the proposal indicating there was some confusion about the purpose of the proposal and what specifically was being recommended. The Committee heard multiple comments, both in support of and in opposition to the proposal and consequently, recommends the item for a vote to allow the membership to decide.

This publication is available free of charge from: https://doi.org/10.6028/NIST.SP.1253

CWMA: The SMA opposes this item due to the implementation costs to the manufacturers, retailers, and consumers. Iowa stated they supported the item as previously proposed, excluding the non-retroactive date. The Committee believes this item has been fully developed and should be moved to a vote.

NEWMA: Eric Golden commented that the SMA opposes this item. Comments were heard on the possible confusion it could lead to. Comments were heard on withdrawing the item. Lou Sakin (Massachusetts) believed the item had merit and recommended voting. The Committee recommends this item be moved forward as an Informational Item.

This publication is available free of charge from: https://doi.org/10.6028/NIST.SP.1253

This publication is available free of charge from: https://doi.org/10.6028/NIST.SP.1253

THIS PAGE INTENTIONALLY LEFT BLANK

This publication is available free of charge from: https://doi.org/10.6028/NIST.SP.1253

Laws and Regulations (L&R) Committee
2019 Final Report

Ms. Michelle Wilson, Committee Chair
Arizona

INTRODUCTION

This is the report of the Laws and Regulations Committee (hereinafter referred to as the "Committee") for the 104th Annual Meeting of the National Conference on Weights and Measures (NCWM). This report is based on the Interim Report offered in the NCWM Publication 16, "Committee Reports," testimony at public hearings, comments received from the regional weights and measures associations and other parties, the addendum sheets issued at the Annual Meeting, and actions taken by membership at the voting session of the Annual Meeting. The voting items shown below were adopted as presented when this report was approved. This report contains those recommendations to amend National Institute of Standards and Technology (NIST) Handbook 130 (2019), "Uniform Laws and Regulations in the Areas of Legal Metrology and Engine Fuel Quality," or NIST Handbook 133 (2019), "Checking the Net Contents of Packaged Goods."

Table A identifies the agenda items by reference key, title of item, page number and the appendices by appendix designations. The acronyms for organizations and technical terms used throughout the agenda are identified in Table B. The first three letters of an item's reference key are assigned from the Subject Series List. The status of each item contained in the report is designated as one of the following: **(V) Voting Item:** the Committee is making recommendations requiring a vote by the active members of NCWM; **(I) Informational Item:** the item is under consideration by the Committee but not proposed for Voting; **(A) Assigned Item:** the Committee has assigned development of the item to a recognized subcommittee or task group within NCWM; **(D) Developing Item:** the Committee determined the item has merit; however, the item was returned to the submitter or other designated party for further development before any action can be taken at the national level; and **(W) Withdrawn Item:** the item has been removed from consideration by the Committee.

Table C provides a summary of the results of the voting on the Committee's items and the report in its entirety. Some Voting Items are considered individually; others may be grouped in a consent calendar. Consent calendar items are Voting Items that the Committee has assembled as a single Voting Item during their deliberation after the Open Hearings on the assumption that the items are without opposition and will not require discussion. The Voting Items that have been grouped into consent calendar items will be listed on the addendum sheets. Prior to adoption of the consent calendar, the Committee entertains any requests from the floor to remove specific items from the consent calendar to be discussed and voted upon individually.

Committees may change the status designation of agenda items (Developing, Informational, Assigned, Voting and Withdrawn) up until the report is adopted, except that items which are marked Developing, Informational, Assigned or Withdrawn cannot be changed to Voting Status. Any change from the Committee Interim Report (as contained in this publication) or from what appears on the addendum sheets will be explained to the attendees prior to a motion and will be acted upon by the active members of NCWM prior to calling for the vote.

Proposed revisions to the handbook(s) are shown as follows. 1) deleted language is indicated with a **bold face font using ~~strikeouts~~** (e.g., **~~this report~~**), and 2) proposed new language is indicated with an **underscore bold faced font** (e.g., **new items**). When used in this report the term "weight" means "mass."

Note: The policy of NIST is to use metric units of measurement in all its publications; however, recommendations received by NCWM technical committees and regional weights and measures associations have been printed in this publication as submitted. Therefore, the report may contain references to U.S. customary units.

This publication is available free of charge from: https://doi.org/10.6028/NIST.SP.1253

Subject Series List

Table A
Table of Contents

Appendix

This publication is available free of charge from: https://doi.org/10.6028/NIST.SP.1253

This publication is available free of charge from: https://doi.org/10.6028/NIST.SP.1253

Table B
Glossary of Acronyms and Terms

Acronym	Term	Acronym	Term
ASTM	ASTM International	NIST	National Institute of Standards and Technology
CFR	Code of Federal Regulations	OWM	Office of Weights and Measures
CNG	Compressed Natural Gas	PALS	Packaging and Labeling Subcommittee
CWMA	Central Weights and Measures Association	S&T	Specifications and Tolerances
FALS	Fuels and Lubricants Subcommittee	SAE	Society of Automotive Engineers
L&R	Laws and Regulations	SWMA	Southern Weights and Measures
LNG	Liquefied Natural Gas	UPLR	Uniform Packaging and Labeling Regulation
NCWM	National Conference on Weights and Measures	USNWG	U.S. National Work Group
NEWMA	Northeastern Weights and Measures Association	WWMA	Western Weights and Measures Association

Table C
Voting Results

Reference Key Number	*House of State Representatives*		*House of Delegates*		*Results*
	Yeas	*Nays*	*Yeas*	*Nays*	
Consent Calendar					
MOS-7	39	0	68	0	Adopted
MOS-8					Adopted
B5: WAM-1					Adopted
B5: ODR-2					Adopted
FLR-1					Adopted
FLR-7					Adopted
NET-4					Adopted
NET-5					Adopted
NET-8					Adopted
MOS-5	31	8	53	19	Adopted
MOS-11	38	0	57	8	Adopted
B4: MOS-6	38	0	68	1	Adopted
Priority Item	35	0	58	4	Adopted
NET-6	38	0	67	1	Adopted
NET-7	39	1	63	6	Adopted
To Accept the Report	Voice Vote				Adopted

Details of All Items
(In order by Reference Key)

ITEM BLOCK 1 (B1) HB 130, UPLR, SEC. 2.8. MULTIUNIT PACKAGE. HB 133, MODIFY "SCOPE" FOR CHAPTERS 2 – 4, ADD A NOTE FOLLOWING SECTIONS 2.3.7.1. AND 2.7.3., CREATE A CHAPTER 5. SPECIALIZED TEST PROCEDURES AND HB 133 APPENDIX F. GLOSSARY

B1: PAL-1	D	Handbook 130 Uniform Packaging and Labeling Regulation: Section 2.8. Multiunit Package
B1: NET-1	D	Handbook 133, Section 1.2.4. Maximum Allowable Variation
B1: NET-2	D	Handbook 133, Modify "Scope" for Chapters 2 – 4, and a note following Section 2.3.7.1. Maximum Allowable Variation (MAV) Requirement and 2.7.3. Evaluation of Results – Compliance Determinations
B1: NET-3	D	Handbook 133: Create a Chapter 5, Specialized Test Procedures
B1-NET-10	D	Handbook 133, Appendix F. Glossary

(B1:NET-3, "Handbook 133, Create a Chapter 5. Specialized Test Procedures" must be adopted in order for the remainder of Item Block 1 to proceed.)

B1: PAL-1 D Handbook 130, Uniform Packaging and Labeling Regulation, Section 2.8. Multiunit Package

Source:
NIST OWM (2019)

Purpose:
Eliminate conflicts between the UPLR and Federal Trade Commission (FTC) regulation for multiunit packages cited in 16 CFR 500.27.

Item Under Consideration:
Amend NIST Handbook 130, Uniform Packaging and Labeling Regulation as follows:

2.8. Multiunit Package. - A package containing two or more individual packages of the same commodity, in the same quantity, intended to be sold as a multiunit package~~**, but where the component packages are labeled individually in full compliance with all requirements of this regulation.**~~

(Amended 20XX)

B1: NET-1 D Handbook 133, Section 1.2.4. Maximum Allowable Variation

Purpose:
Amend language regarding the total quantity declaration on multiunit or variety packages, when the MAV may need to be recalculated based on the Total Quantity MAV.

Item Under Consideration:
Amend NIST Handbook 133, Chapter 1 as follows:

This publication is available free of charge from: https://doi.org/10.6028/NIST.SP.1253

This publication is available free of charge from: https://doi.org/10.6028/NIST.SP.1253

1.2.4. Maximum Allowable Variation

The limit of the "reasonable minus variation" for an under filled package is called a "Maximum Allowable Variation" (MAV). An MAV is a deviation from the labeled weight, measure, or count of an individual package beyond which the deficiency is considered an unreasonable minus error. Each sampling plan limits the number of negative package errors permitted to be greater than the MAV. unreasonable minus error. Each sampling plan limits the number of negative package errors permitted to be greater than the MAV. **Packages are offered for sale individually or in multiunit packages which may contain two or more individual inner packages. When individual packages are tested the MAV is applied to each package in the sample which has a minus package error. When a total quantity declaration on a multiunit or variety package is verified, and the MAV is not determined in terms of a percent of the labeled quantity, a "Total Quantity MAV" is compared to the minus Total Quantity Package Error(s) to determine if they are unreasonable.**

Note: The Total Quantity Package Error is the sum of the errors found in the individual inner packages.

Total Quantity Package Error = Sum of Individual Inner Package Errors

(Amended 2010 **and 20XX**)

1.2.4.1. Total Quantity MAV for Multiunit and Variety Packages (See also Chapter 5. "Specialized Test Procedures")

a. Multiunit Package. – Regarding the total quantity declaration that appears on a multiunit package compare a Total Quantity MAV to each minus Total Quantity Package Error to determine if the error is unreasonable. Calculate the Total Quantity MAV using the following formula:

Total Quantity MAV = Number of Individual Inner Packages × MAV for Individual Inner Package Quantity

Terms are defined as:

Number of Individual Inner Packages. – The total number of individual inner packages having a uniform labeled weight, measure and or count.

MAV for Individual Inner Package Quantity. – The MAV for the labeled quantity for the individual inner packages specified in the proper table of MAVs in Appendix A. "Tables."

b. Variety Package. – Regarding the total quantity declaration that appears on a variety package, compare a Total Quantity MAV to each minus Total Quantity Package Error to determine if the error is unreasonable.

Calculate the Total Quantity MAV using the following formula:

Total Quantity MAV = The sum of the applicable MAVs for all Individual Inner Packages

Variety packages typically include several different types of similar products with various net quantity declarations. While the commodities may be generically similar, they can differ in weight, measure, volume, or appearance. For these packages a Total Quantity MAV is calculated for each product type and the results are added to obtain a Total Quantity MAV for comparison to each minus Total Quantity Package Error.

Terms are defined as:

Number of Individual Inner Packages. – The total number of similar but not identical individual inner packages with differing and/or uniform labeled weight or measure.

MAV for Individual Inner Package Quantity. – The MAV for the quantity declared for the individual inner packages specified in the proper Table of MAVs in Appendix A. "Tables."
(Added 20XX)

B1: NET-2 D Handbook 133, Sections 2.1. Scope, 3.1. Scope, 4.1. Scope and 2.3.7.1. Maximum Allowable Variation (MAV) Requirement

Purpose:
With the adoption of NIST Handbook 133, Chapter 5. Specialized Test Procedures this item clarifies the language within NIST Handbook 133.

Item Under Consideration:
Amend NIST Handbook 133, Chapters 2, 3 and 4 as follows:

Add a Note to HB133, Chapter 2, Section 2.1. "Scope;" Section 3.1. "Scope;" and Section 4.1 "Scope" that refers users to the Chapter 5. "Specialized Test Procedures" for these types of packages.

Note: If Multiunit or Variety Packages are to be inspected, see Chapter 5. "Specialized Test Procedures" for guidance in testing these types of packages. If a total quantity declaration is to be verified and the MAV to be applied is not based on a percentage of the labeled quantity, see also Section 1.2.4.1. "Total Quantity MAV for Multiunit and Variety Packages.
(Added 20XX)

And

Add the following note to HB133, Chapter 2, Section 2.3.7.1 "Maximum Allowable Variation (MAV) Requirement" and Section 2.7.3. "Evaluation of Results – Compliance Determinations."

Note: If a total quantity declaration on a multiunit or variety package is verified, and the MAV applied is not based on a percent of the labeled quantity see Section 1.2.4.1. "Total Quantity MAV for Multiunit and Variety Packages.
(Added 20XX)

B1: NET-3 D Handbook 133, Create a Chapter 5. Specialized Test Procedures

Purpose:
Create new chapter in NIST Handbook 133 that has specialized test procedures to verify the inner contents of multiunit and variety packages.

Item Under Consideration:
Amend NIST Handbook 133, Chapter 5 as follows:

5.1. Scope

The following procedures are for use in verifying the net quantity of contents of multiunit packages with individual inner packages that have the same commodity and identically labeled quantities in verifying variety packages with individual inner packages that differ in labeled weight, measure or volume. The procedure used is determined by the package label. If a total net quantity of contents is not declared on the package label, use Section 5.2. Individual Package Quantity. If a total net quantity of contents is declared on the package, use Section 5.3. Total Quantity. If the packages are labeled with other or additional quantity statements (i.e., dry volume, area, length, width, or thickness), added steps or, when proper, additional Total Quantity MAVs may be required.

This publication is available free of charge from: https://doi.org/10.6028/NIST.SP.1253

This publication is available free of charge from: https://doi.org/10.6028/NIST.SP.1253

5.2. Individual Package Quantity

This procedure is used to test open or transparent multiunit packages with no total net quantity declaration on the package label. For these packages, the labeled net quantity is visible on each individual inner package and they are identical (See Figure 1. Multiunit Package with Individual Quantity Declarations [which contains two rows of packages]).

Cereal Net Wt 100 g	Cereal Net Wt 100 g	Cereal Net Wt 100 g	Cereal Net Wt 100 g	Cereal Net Wt 100 g

Figure 1. Multiunit Package with Individual Quantity Declarations (which contains two rows of packages)

5.2.1. Test Procedure

1. **Follow Section 2.3.1. "Define the Inspection Lot" which is the total number of individual inner packages in the multiunit packages (e.g., if there are 120 packages and each contains 12 individual inner packages, the Inspection Lot size is 1440). Use this number with Category A or Category B. to find the sample size (See Section 2.3.2. "Select Sampling Plans"). Select a random sample (See Section 2.3.4. "Random Sample Selection").**

2. **At least two of the individual inner packages are opened to determine an average tare weight (See Section 2.3.5. "Procedures for Determining Tare"). The Average Tare Weight is added to the labeled quantity to obtain a Nominal Gross Weight (See Section 2.3.6. "Determine Nominal Gross Weight and Package Errors") which is used to determine package errors.**

3. **The net quantity of each individual inner package in the sample is determined. If a count declaration appears on the multiunit packages, it should be verified (See Section 4.2. "Packages Labeled by Count") and the appropriate MAV for the count from Table 2-7. MAV for Packages Labeled by Count applied.**

4. **If minus package errors are found in the sample, the value of the MAV to be applied is determined by looking up the quantity for the individual inner packages (See Appendix A "Tables"). The MAV for the labeled quantity is compared to each minus package error in the individual inner packages to determine if any are unreasonable (See Section 2.3.7.1. "MAV Requirement"). If the number of unreasonable errors exceeds the amount allowed for the sample size (See Appendix A. Tables 2-1 or 2-2, Column 4), the sample fails. If the sample passes, go to Step 5.**

5. **Apply Section 2.3.7.2. "Average Requirement." The sample passes or fails depending on the results of the evaluation conducted according to Section 2.3.7. "Evaluation for Compliance."**

5.3. Total Quantity

Use this procedure to test multiunit packages labeled with a count and/or total net quantity declaration. This procedure can be used to verify the total net quantity declared on open or closed multiunit packages or multiunit packages with transparent or opaque packaging. If the quantities of the individual inner packages vary (which is allowed in Variety Packages) or, if the quantity of the individual inner packages is not declared, see Section 5.4. Exceptions.

This publication is available free of charge from: https://doi.org/10.6028/NIST.SP.1253

5.3.1. Test Procedure

1. **Follow Section 2.3.1. "Define the Inspection Lot" which is the number of multiunit packages. Use this number with Category A or Category B. to find the sample size (See Section 2.3.2. "Select Sampling Plans"). Select a random sample (See Section 2.3.4. "Random Sample Selection").**

2. **For packages labeled by weight, determine the tare weight of at least two multiunit packages using Section 2.3.5. "Procedures for Determining Tare". The average tare weight is added to the labeled weight to obtain a nominal gross weight (See Section 2.3.6. "Determine Nominal Gross Weight and Package Error"). This is used to determine errors in the total package quantity declaration.**

3. **Determine the net quantity of each multiunit package and calculate the Total Quantity Package Error for each multiunit package.**

Note: The Total Quantity Package Error is the sum of the errors found in the individual inner packages.

Total Quantity Package Error = Sum of Individual Inner Package Errors

If needed, verify the count declaration of the individual inner packages. To determine the MAV for count use Appendix A. Table 2-7. "MAV for Packages Labeled by Count."

4. **If minus package errors are found in the sample, look up and use the MAV for the individual inner package labeled quantity. (See Section 1.2.4.1. "Total Quantity MAV for Multiunit and Variety Packages" and the appropriate MAVs in Appendix A "Tables"). Calculate the MAV to be applied to the total quantity of contents declaration as follows:**

Total Quantity MAV = Number of Individual Inner Packages × MAV for Individual Inner Package Quantity

Note: A "Total Quantity MAV" is not required when the MAV to be applied is based on a percent of a labeled quantity of a multiunit or variety package.

5. **The "Total Quantity MAV" is compared to each minus Total Quantity Package Error to determine if any of the errors are unreasonable (See Section 2.3.7.1. "MAV Requirement"). If the number of unreasonable errors exceeds the amount allowed for the sample size the sample fails. (See Section 2.3.1. "Define the Inspection Lot" and Tables 2-1 or 2-2, Column 4). If the sample passes go to Step 6.**

6. **Apply Section 2.3.7.2. "Average Requirement." The sample passes or fails depending on the results of the evaluation conducted according to Section 2.3.7. "Evaluation for Compliance."**

5.4. Exceptions

5.4.1. Multiunit Packages with Only a Total Quantity Declaration

In NIST HB 130, Uniform Packaging and Labeling Regulation (UPLR), Section 10.4. Multiunit Packages states that unlabeled individual packages not intended for individual retail sale are only required to declare a total quantity declaration [See Figure 2. Multiunit Package (three packages) with only a Total Quantity Declaration]. Section 10.4. Multiunit Packages also permits multiunit packages to include an optional statement of the count of the individual inner packages even when the regulations do not require such a statement.

This publication is available free of charge from: https://doi.org/10.6028/NIST.SP.1253

Floor Cleaner	**Floor Cleaner** **NET WEIGHT 15 kg**	**Floor Cleaner**

Figure 2. Multiunit Package (three packages) with only a Total Quantity Declaration

5.4.1.1. MAV Application

When multiunit package labels do not include a quantity statement for each individual inner package (e.g., only a total quantity appears) a Total Quantity MAV cannot be not applied because the quantities in the individual inner packages are unknown. In these cases, the MAV value for the total quantity declaration in the MAV tables (See Appendix A. Tables) is compared to the Total Quantity Package Error to determine if any of the errors are unreasonable (See Section 2.3.7.1. "MAV Requirement").

5.4.2. Variety Packages: Non-Uniform Quantity Declarations

Uniform Packaging and Labeling Regulation, Section 10.6. Variety Packages states that a variety package is required to have total quantity declaration. While the commodities may be generically similar, they can differ in weight, measure, volume, or appearance. When the labeled weight, measure or count varies, the value of the MAV can also vary. When variety packages are tested, the procedure used to calculate a Total Quantity MAV requires the summing of the MAV values over the number of inner packages of all types. An example label for a variety package of candy bars is shown in Figure 3. Variety Package – Four Similar but Different Products with Varying Net Weights, to illustrate a total quantity declaration, count, and the weight of the individual inner packages.

30 Candy Bar – Variety Pack **Total Net Weight 1.33 kg**	
10 – 55 g Peanut Butter Cups	**6 – 30 g Dark Chocolate Bars**
6 – 46 g Milk Chocolate Bars with Almonds	**8 – 41 g Milk Chocolate Bars**

Figure 3. Variety Package – Four Similar but Different Products with Varying Net Weights

5.4.3. Test Procedure:

1. **When this type of variety package is tested the average tare weight (e.g., packaging from the individual inner packages and the outer package combined) is determined and a nominal gross weight is used to determine the error in the total quantity declaration.**

Note: The Total Quantity Package Error is the sum of the errors found in the individual inner packages.

Total Quantity Package Error = Sum of Individual Inner Package Errors

This publication is available free of charge from: https://doi.org/10.6028/NIST.SP.1253

The MAV used to determine if any minus Total Quantity Package Error is unreasonable is to be calculated. The MAVs applied are based on the labeled quantities of each product type and are calculated (i.e., the number of individual inner packages of each product type is multiplied by their count) and these are summed to obtain the Total Quantity MAV (See example shown in Table 1. Steps in Calculating a MAV for a Variety Package).

5.4.3.1. MAV Application:

A Total Quantity MAV must be applied because the labeled quantities and MAVs of the individual inner packages vary. For example, based on the quantity of the total net weight the MAV for 1.33 kg is 42.6 g but the "Total Quantity MAV" to be applied is 122.4 g (See example shown reflected in Table 1. Steps in Calculating a MAV for a Variety Package).

Table 1. Steps in Calculating a MAV for a Variety Package (Based on Figure 3. Variety Package – Four Similar but Different Products with Varying Net Weights)

Item	Product	Number in Package	Net Weight	MAV for Net Quantity	Total Quantity MAV
1	Peanut Butter Cups	10	55 g	5.4 g	10 × 5.4 = 54 g
2	Dark Chocolate Bars	6	30 g	10 % of labeled quantity	6 × (0.1 × 30) = 18 g
3	Milk Chocolate Bars	8	41 g	3.6 g	8 × 3.6 = 28.8 g
4	Milk Chocolate Bars with Almonds	6	46 g	3.6 g	6 × 3.6 = 21.6 g
				Total Quantity MAV	122.4 g

(Added 20XX)

B1: NET-10 D Handbook 133, Appendix F. Glossary

Purpose:
This will add definitions for language being placed into a NIST Handbook 133 regarding multiunit packages.

Item Under Consideration:
Amend NIST Handbook 133, Appendix F as follows:

Multiunit Package. - A package containing two or more individual packages of the identical commodity, in the same quantity, intended to be sold as a multiunit package

Variety Package. – A package intended for retail sale, containing two or more individual packages or units of similar, but not identical, commodities. Commodities that are generically the same, but that differ in weight, measure, volume, appearance, or quality, are considered similar, but not identical.

Total Quantity MAV. – A calculated value used to determine if each minus Total Quantity Package Error found in multiunit and variety packages are unreasonable. A Total Quantity MAV is based on the declared quantity and count of the individual inner packages. It is determined by looking up MAV for the individual inner package quantity (See appropriate table of MAVs in Appendix A "Tables" of NIST HB 133) and then calculating the "Total Quantity MAV" as follows:

This publication is available free of charge from: https://doi.org/10.6028/NIST.SP.1253

Total Quantity MAV = Number of Individual Inner Packages × MAV for Individual Inner Package Quantity

Note: A Total Quantity MAV is not used when the MAV to be applied is based on a percentage of the labeled quantity on a multiunit or variety package.

Note: The Total Quantity Package Error is the sum of the errors found in the individual inner packages.

Total Quantity Package Error = Sum of Individual Inner Package Errors

(Added 20XX)

Background/Discussion:
This item has been assigned to the submitter for further development. For more information or to provide comment, please contact:

Ms. Lisa Warfield
NIST, Office of Weights and Measures
(301) 975-3308, lisa.warfield@nist.gov

When the current test procedures in NIST Handbook 133 are used and a MAV is applied to the total quantity declaration on some multiunit and variety, packages the MAV allowed for the individual inner packages can indirectly be reduced as much as 50 % or more, depending on the number of individual items in the package. This proposal places language in NIST Handbook 133 to add language regarding the total quantity declaration on multiunit or variety packages, when the MAV may need to be recalculated based on the Total Quantity MAV.

When a total quantity declaration on a multiunit or variety package is verified it will require the inspector, except when the MAV is based on a percentage of the labeled quantity, to calculate and use a "Total Quantity MAV." This calculation will determine if minus package errors are unreasonable (an unreasonable error is a minus package error that exceeds a MAV specified in the proper table of MAVs in NIST Handbook 133, Appendix A. "Tables") A "Total Quantity MAV" is calculated by multiplying the number of individual inner packages by the MAV value, which is based on the declared quantity of the individual inner packages. It is found by looking up the MAV for the individual inner package quantity (See NIST HB 133, Appendix A. "Tables") and then calculating the "Total Quantity MAV." This test procedure will be used to assist inspectors with their inspection.

At the 2019 NCWM Interim Meeting, comments were heard recognizing the merit of this item. Several regulators and an industry member made comments that some areas within the procedure are too confusing. Mr. Tim Chesser (Arkansas) remarked that he does not understand Item Net 3. Section 5.4.1.1. MAV Application. Mr. Kurt Floren (Los Angeles County, California) submitted editorial changes that the Committee accepted for the entire Item Block 1. In addition, the Committee would like NIST/OWM to address Mr. Floren's comments for NET- 3. Chapter 5. Specialized Test Procedures will be reviewed by the NIST/OWM. The submitter, NIST OWM, was not in attendance due to a government furlough, so concerns could not be addressed. The Committee would like the submitter to review formatting, clarifying label quantity, and modifying language for additional clarity. The Committee would like to see the above issues reviewed by the submitter and encourages further development.

At the 2019 NCWM Annual Meeting, Lisa Warfield (NIST OWM) stressed to membership that this item is fully developed and there is data and supporting documents that reflect issues that inspectors found pertaining to multi-unit and variety packages during inspections. The white paper also provides additional data as to how and why these proposals were developed. NIST also addressed the WWMA comments in the latest Item under Consideration. There were no additional comments heard at the Annual Meeting.

Regional Association Comments:
At the WWMA 2018 Annual Meeting, Ms. Lisa Warfield (NIST OWM) provided a description of the block of items. NIST is requesting all four items in Block 1 need to move together as a group. They hope to have the item fully developed by January for voting status at the NCWM 2019 Annual Meeting. Mr. Kurt Floren (Los Angeles County, California) noted concerns regarding the MAV for multi-unit packaging as proposed. Mr. Floren suggested that the amendment of striking the last phrase does not fully reflect 16 CFR 500.27. FTC regulations state that a multi-unit

This publication is available free of charge from: https://doi.org/10.6028/NIST.SP.1253

package with individual packages intended for individual sale should be labeled appropriately. Mr. Floren noted additional clarification is needed in several areas, and although he did not have specifics, offered to assist the developer. He suggested that there may be a way to streamline and clarify the requirements without providing duplicative wording throughout the handbook.

The Committee believes this item has merit to address multi-unit and variety packages and is needed to provide instruction regarding test procedures for these types of products; however, we recommend that the developer explore ways to simplify and address the concerns raised during open hearings and committee discussion. Mr. Floren has offered his assistance to the developer. As such, the committee believes these items should be assigned a Developing Item.

At the 2019 NEWMA Annual Meeting, Ms. Lisa Warfield (NIST Technical Advisor) commented that Item NET-10 was inadvertently omitted from the 2018 Fall Regional Agendas and the 2019 Interim Agenda. Ms. Warfield commented that there was a concern from Mr. Chris Guay (Procter and Gamble) regarding the multiunit definition is explained on page 1 of the white paper submitted by NIST. Ms. Warfield requested that any questions, suggestions, or concerns be directed to her. Ms. Warfield would like this to be considered a Voting item at the Fall regional meetings. Based on the testimony of the submitter, all issues have been addressed and the Committee believes the item is fully developed and is ready for Voting status.

At the SWMA 2018 Annual Meeting the submitter explained all four proposals and the reasoning behind the submittal.

- Amend the definition for Multiunit package in the UPLR
- Under NIST HB133 Section 1.2.4. Maximum Allowable Variation - add language regarding the declaration on multiunit and variety packages, for when the MAV may need to be recalculated
- NIST HB133 Sections 2.1., Scope 4.1. and Section 2.3.7.1. MAV requirement. Add a note for multiunit and variety
- NIST HB133 Add a Chapter 5.1. Create a Chapter 5 within HB133 to address specialized test procedures. This also adds a specialized test procedure for multiunit and variety packages

Ms. Warfield (NIST OWM) commented that a lengthy supporting document is located on the NCWM Publication 15 webpage. Mr. Guay (Proctor and Gamble) explained that manufacturers pack to the individual item and do not know how the finalized package will be prepared (multiunit). Mr. Guay would also like the test procedure to reflect several examples to assist manufacturers. There were several comments supporting the addition of a Chapter 5 which would reflect the test procedure in its entirety. Supporters believe this will assist inspectors that do not perform package checking inspections on a routine basis. Tim Chesser (Arkansas) would like to have the title to Chapter 5 modified to accurately reflect the chapter contents. The Committee believes that this item is fully developed and recommends this as a Voting item.

At the CWMA 2019 Annual Meeting, Lisa Warfield (NIST Technical Advisor) commented that Item Net-10, an addition of some glossary terms - was inadvertently left out of the block. Ms. Warfield commented that during the 2019 Interim Meeting both regulators and industry indicated that there was concern with the item, but there was no specificity. A white paper was submitted to support this item, which appears in the L&R supporting documents. Mr. Chris Guay (Procter and Gamble) has some concern that from a manufacturer's perspective, if multi-unit is redefined it would be problematic and confusing. After review of this item and the appendix documents, the Committee sees no reason to keep it a developing item, as it is fully developed according to the submitter. It should move forward as a Voting item.

Additional letters, presentations, and data may have been part of the Committee's consideration and were posted on the NCWM website during the time this item was on the Committee's agenda. To the extent possible, comments and positions from such documents have been summarized in the committee's report along with comments heard during the Committee's hearings.

This publication is available free of charge from: https://doi.org/10.6028/NIST.SP.1253

MOS – UNIFORM REGULATION FOR THE METHOD OF SALE OF COMMODITIES

MOS-1 A Various Sections within the Method of Sale of Commodities, Background and Section 2. and create a Section 3. Method of Sale for Fuels, Lubricants and Automotive Products.

This appeared as part of Item Block 2, B2: MOS-1 in Publication 15 (2019).

Source:
NCWM Fuels and Lubricants Subcommittee (original submitter Archer Daniels Midland Corporation) (2018)

Purpose:
This proposal is to harmonize the method of sale for kerosene between the Uniform Regulation for the Method of Sale of Commodities and the Uniform Engine Fuels and Automotive Lubricants Regulation.

Item Under Consideration:
Amend NIST Handbook 130 Uniform Regulation for the Method of Sale of Commodities as follows:

B. Uniform Regulation for the Method of Sale of Commodities

1. Background

The National Conference on Weights and Measures (NCWM) has long been concerned with the proper units of measurement to be used in the sale of all commodities. This approach has gradually broadened to concerns of standardized package sizes and general identity of particular commodities. Requirements for individual products were at one time made a part of the Weights and Measures Law or were embodied in separate individual Model Regulations. In 1971, this "Model State Method of Sale of Commodities Regulation" was established (renamed in 1983); amendments have been adopted by the Conference almost annually since that time.

Sections with "added 1971" dates refer to those sections that were originally incorporated in the Weights and Measures Law or in individual Model Regulations recommended by the NCWM. Subsequent dates reflect the actual amendment or addition dates.

The 1979 edition included, for the first time, requirements for items packaged in quantities of the International System of Units (SI), the modernized metric system, as well as continuing to present requirements for U.S. customary quantities. It should be stressed that nothing in this Regulation requires changing to the SI system of measurement. SI values are given for the guidance of those wishing to adopt new SI quantities of the commodities governed by this Regulation. SI means the International System of Units as established in 1960 by the General Conference on Weights and Measures and interpreted or modified for the United States by the Secretary of Commerce.

In 1984 the NCWM adopted a section in the Uniform Regulation for the Method of Sale of Commodities requiring that motor fuel containing alcohol be labeled to disclose to the retail purchaser that the fuel contains alcohol. The delegates deemed this action necessary since motor vehicle manufacturers were qualifying their warranties with respect to some gasoline-alcohol blends, motor fuel users were complaining to weights and measures officials about fuel quality and vehicle performance, and the American Society for Testing and Materials (ASTM) had not yet finalized quality standards for oxygenated (which includes alcohol-containing) fuels. While many argued that weights and measures officials should not cross the line from quantity assurance programs to programs regulating quality, the delegates were persuaded that the issue needed immediate attention. (See NIST Handbook 130, Uniform Fuels and Automotive Lubricants Inspection Law)

A Motor Fuels Task Force was appointed in 1984 to develop mechanisms for achieving uniformity in the evaluation and regulation of motor fuels. The Task Force developed the Uniform Motor Fuel Inspection Law (NIST Handbook 130, Uniform Fuels and Automotive Lubricants Inspection Law) and the Uniform Fuel and Automotive Lubricants Regulation to accompany the law. The Uniform Regulation for Fuels and Automotive

This publication is available free of charge from: https://doi.org/10.6028/NIST.SP.1253

Lubricants was adopted by the NCWM in 1995. (See NIST Handbook 130, Uniform Fuels and Automotive Lubricants Regulation.)

In 20XX the NCWM determined that any language within a regulation that is not directly related to the method of sale should be placed in the Uniform Regulations for Uniform Fuels and Automotive Lubricants Regulation and should be removed from the Method of Sale Regulations. The fuels and related products sections were consolidated into a subsection with notes directing the user to the Uniform Fuels and Automotive Lubricants Regulation for additional information. A sunset date was set for the information not directly related to quantity determination.

This Regulation assimilates all of the actions periodically taken by the Conference with respect to certain food items, non-food items, and general method of sale concepts. Its format is such that it will permit the addition of individual items at the end of appropriate sections as the need arises. Its adoption as a regulation by individual jurisdictions will eliminate the necessity for legislative consideration of changes in the method of sale of particular commodities. Such items will be able to be handled through the normal regulation-making process.

2. Status of Promulgation

The table beginning on page 6 shows the status of adoption of the Uniform Regulation for the Method of Sale of Commodities.

*The National Conference on Weights and Measures (NCWM) is supported by the National Institute of Standards and Technology (NIST) in partial implementation of its statutory responsibility for "cooperation with the states in securing uniformity in weights and measures laws and methods of inspection."

Section 2. Non-Food Products [*NOTE 1*, page 103]

~~**2.19. Kerosene (Kerosine). All kerosene kept, offered, exposed for sale, or sold shall be identified as such and will include, with the word kerosene, an indication of its compliance with the latest version of the standard specification ASTM Standard D3699, "Standard Specification for Kerosine."**~~

~~**Example:**~~
~~**1K Kerosene; Kerosene - 2K.**~~
~~**(Added 1983)**~~

~~**2.19.1. Retail Sale from Bulk. All kerosene kept, offered, or exposed for sale and sold from bulk at retail shall be in terms of the gallon or liter.**~~
~~**(Added 2012)**~~

~~**2.20. Gasoline-Oxygenate Blends.**~~

~~**2.20.1. Method of Retail Sale. Type of Oxygenate must be Disclosed. All automotive gasoline or automotive gasoline-oxygenate blends kept, offered, or exposed for sale, or sold at retail containing at least 1.5 mass percent oxygen shall be identified as "with" or "containing" (or similar wording) the predominant oxygenate in the engine fuel. For example, the label may read "contains ethanol" or "with MTBE." The oxygenate contributing the largest mass percent oxygen to the blend shall be considered the predominant oxygenate. Where mixtures of only ethers are present, the retailer may post the predominant oxygenate followed by the phrase "or other ethers" or alternatively post the phrase "contains MTBE or other ethers." In addition, gasoline-methanol blend fuels containing more than 0.15 mass percent oxygen from methanol shall be identified as "with" or "containing" methanol. This information shall be posted on the upper 50 % of the dispenser front panel in a position clear and conspicuous from the driver's position in a type at least 12.7 mm (½ in) in height, 1.5 mm ($^{1}/_{16}$ in) stroke (width of type).**~~
~~**(Amended 1996)**~~

This publication is available free of charge from: https://doi.org/10.6028/NIST.SP.1253

~~2.20.2. Documentation for Dispenser Labeling Purposes. The retailer shall be provided, at the time of delivery of the fuel, on product transfer documents such as an invoice, bill of lading, shipping paper, or other documentation:~~

~~(a) Information that complies with 40 CFR 80.1503 when the fuel contains ethanol.~~

~~(b) For fuels that do not contain ethanol, information that complies with 40 CFR 80.1503 and a declaration of the predominant oxygenate or combination of oxygenates present in concentrations sufficient to yield an oxygen content of at least 1.5 mass percent in the fuel. Where mixtures of only ethers are present, the fuel supplier may identify either the predominant oxygenate in the fuel (i.e., the oxygenate contributing the largest mass percent oxygen) or alternatively, use the phrase "contains MTBE or other ethers."~~

~~(c) Gasoline containing more than 0.15 mass percent oxygen from methanol shall be identified as "with" or "containing" methanol.~~

~~(Added 1984) (Amended 1985, 1986, 1991, 1996, and 2014)~~

~~2.20.3. EPA Labeling Requirements. — Retailers and wholesale purchaser-consumers of gasoline shall comply with the EPA pump labeling requirements for gasoline containing greater than 10 volume percent (v%) up to 15 volume percent (v%) ethanol (E15) under 40 CFR 80.1501. (For additional information, refer to Section 2.30.2. FTC Labeling Requirements.)~~

~~(Added 2018)~~

~~2.21. Liquefied Petroleum Gas. — All liquefied petroleum gas, including, but not limited to propane, butane, and mixtures thereof, shall be kept, offered, exposed for sale, or sold by the pound, metered cubic foot [NOTE 7, page 132] of vapor (defined as 1 ft^3 at 60 °F [15.6 °C]), or the gallon (defined as 231 in^3 at 60 °F [15.6 °C]). All metered sales by the gallon, except those using meters with a maximum rated capacity of 20 gal/min or less, shall be accomplished by use of a meter and device that automatically compensates for temperature.~~

~~(Added 1986)~~

~~NOTE 7: Sources: American National Standards Institute, Inc., "American National Standard for Gas Displacement Meters (500 Cubic Feet per Hour Capacity and Under)," First edition, 1974, and NIST Handbook 44, "Specifications, Tolerances, and Other Technical Requirements for Weighing and Measuring Devices."~~

~~2.27. Retail Sales of Natural Gas Sold as a Vehicle Fuel.~~

~~2.27.1. Definitions.~~

~~2.27.1.1. Compressed Natural Gas (CNG). A gaseous fuel composed primarily of methane that is suitable for compression and dispensing into a fuel storage container(s) for use as an engine fuel.~~

~~(Amended 2016)~~

~~2.27.1.2. Gasoline Gallon Equivalent (GGE). — Gasoline gallon equivalent (GGE) means 2.567 kg (5.660 lb) of compressed natural gas.~~

~~(Amended 2016)~~

~~2.27.1.3. Diesel Gallon Equivalent (DGE). — Diesel gallon equivalent means 6.384 lb of compressed natural gas or 6.059 lb of liquefied natural gas.~~

~~(Added 2016)~~

This publication is available free of charge from: https://doi.org/10.6028/NIST.SP.1253

~~**2.27.1.4. Liquefied Natural Gas (LNG). – Natural gas, which is predominantly methane, that has been liquefied at 162 °C (− 260 °F) at 14.696 psia and stored in insulated cryogenic fuel storage tanks for use as an engine fuel.**~~

~~**(Added 2016)**~~

~~**2.27.2. Method of Retail Sale and Dispenser Labeling.**~~

~~**2.27.2.1. Method of Retail Sale for Compressed Natural Gas. – All compressed natural gas kept, offered, or exposed for sale and sold at retail as a vehicle fuel shall be measured in terms of mass, and indicted in the gasoline gallon equivalent (GGE), diesel gallon equivalent (DGE) units, or mass.**~~

~~**(Amended 2016)**~~

~~**2.27.2.2. Dispenser Labeling Compressed Natural Gas. – All retail compressed natural gas dispensers shall be labeled with the equivalent conversion factor in terms of pounds (lb). The label shall be permanently and conspicuously displayed on the face of the dispenser and shall have the statement "1 Gasoline Gallon Equivalent (GGE) means 5.660 lb of Compressed Natural Gas" or "1 Diesel Gallon Equivalent (DGE) means 6.384 lb of Compressed Natural Gas" consistent with the method of sale used.**~~

~~**(Amended 2016)**~~

~~**2.27.2.3. Method of Retail Sale for Liquefied Natural Gas. – All liquefied natural gas kept, offered, or exposed for sale and sold at retail as a vehicle fuel shall be measured in mass and indicated in diesel gallon equivalent (DGE) units or mass.**~~

~~**(Added 2016)**~~

~~**2.27.2.4. Dispenser Labeling of Retail Liquefied Natural Gas. – All retail liquefied natural gas dispensers shall be labeled with the equivalent conversion factor in terms of pounds (lb). The label shall be permanently and conspicuously displayed on the face of the dispenser and shall have the statement "1 Diesel Gallon Equivalent (DGE) means 6.059 lb of Liquefied Natural Gas."**~~

~~**(Added 2016)**~~

~~**2.30. Ethanol Flex Fuel.**~~

~~**2.30.1. How to Identify Ethanol Flex Fuel. – Ethanol flex fuel shall be identified as "Ethanol Flex Fuel or EXX Flex Fuel."**~~

~~**2.30.2. FTC Labeling Requirements. – Ethanol flex fuel shall be identified and labeled in accordance with the Federal Trade Commission Automotive Fuel Ratings, Certification and Posting Rule, 16 CFR 306, as amended. (For additional information, refer to Section 2.20.3. EPA Labeling Requirements.)**~~

~~**(Added 2007) (Amended 2014 and 2018)**~~

~~**2.31. Biodiesel and Biodiesel Blends.**~~

~~**2.31.1. Identification of Product. Biodiesel shall be identified by the term "Biodiesel" with the designation "B100." Biodiesel Blends shall be identified by the term "Biodiesel Blend."**~~

~~**2.31.2. Labeling of Retail Dispensers.**~~

~~**2.31.2.1. Labeling of Grade Required. Biodiesel shall be identified by the grades S15 or S500. biodiesel blends shall be identified by the grades No. 1-D, No. 2-D, or No. 4-D.**~~

~~**2.31.2.2. EPA Labeling Requirements Also Apply. Retailers and wholesale purchaser-consumers of biodiesel blends shall comply with EPA pump labeling requirements for sulfur under 40 CFR 80.570.**~~

This publication is available free of charge from: https://doi.org/10.6028/NIST.SP.1253

~~**2.31.2.3. Automotive Fuel Rating. Biodiesel and biodiesel blends shall be labeled with its automotive fuel rating in accordance with 16 CFR 306.**~~

~~**2.31.2.4. Biodiesel Blends. When biodiesel blends greater than 20 % by volume are offered by sale, each side of the dispenser where fuel can be delivered shall have a label conspicuously placed that states "Consult Vehicle Manufacturer Fuel Recommendations." The lettering of this legend shall not be less than 6 mm (¼ in) in height by 0.8 mm (1/32 in) stroke; block style letters and the color shall be in definite contrast to the background color to which it is applied.**~~

~~**2.31.3. Documentation for Dispenser Labeling Purposes. The retailer shall be provided, at the time of delivery of the fuel, a declaration of the volume percent biodiesel on an invoice, bill of lading, shipping paper, or other document. This documentation is for dispenser labeling purposes only; it is the responsibility of any potential blender to determine the amount of biodiesel in the diesel fuel prior to blending.**~~

~~**2.31.4. Exemption. Biodiesel blends that contain less than or equal to 5 % biodiesel by volume are exempt from the requirements of Sections 2.31.1. Identification of Product, 2.31.2. Labeling of Retail Dispensers, and 2.31.3. Documentation for Dispenser Labeling Purposes when it is sold as diesel fuel.**~~

~~**(Added 2008)**~~

~~**2.32. Retail Sales of Hydrogen Fuel (H).**~~

~~**2.32.1. Definitions for Hydrogen Fuel. A fuel composed of molecular hydrogen intended for consumption in a surface vehicle or electricity production device with an internal combustion engine or fuel cell.**~~

~~**(Amended 2012)**~~

~~**2.32.2. Method of Retail Sale and Dispenser Labeling. All hydrogen fuel kept, offered, or exposed for sale and sold at retail shall be in mass units in terms of the kilogram. The symbol for hydrogen vehicle fuel shall be the capital letter "H" (the word Hydrogen may also be used).**~~

~~**2.32.3. Retail Dispenser Labeling.**~~

~~**(a) A computing dispenser must display the unit price in whole cents on the basis of price per kilogram.**~~

~~**(b) The service pressure(s) of the dispenser must be conspicuously shown on the user interface in bar or the SI unit of pascal (Pa) (e.g., MPa).**~~

~~**(c) The product identity must be shown in a conspicuous location on the dispenser.**~~

~~**(d) National Fire Protection Association (NFPA) labeling requirements also apply.**~~

~~**(e) Hydrogen shall be labeled in accordance with 16 CFR 309 FTC Labeling Alternative Fuels.**~~

~~**2.32.4. Street Sign Prices and Advertisements.**~~

~~**(a) The unit price must be in terms of price per kilogram in whole cents (e.g., $3.49 per kg, not $3.499 per kg).**~~

~~**(b) The sign or advertisement must include the service pressure (expressed in megapascals) at which the dispenser(s) delivers hydrogen fuel (e.g., H35 or H70).**~~

~~**(Added 2010)**~~

This publication is available free of charge from: https://doi.org/10.6028/NIST.SP.1253

~~2.33. Oil.~~

~~2.33.1. Labeling of Vehicle Engine (Motor) Oil. – Vehicle engine (motor) oil shall be labeled.~~

~~2.33.1.1. Viscosity. The label on any vehicle engine (motor) oil container, receptacle, dispenser, or storage tank, and any invoice or receipt from service on an engine that includes the installation of vehicle engine (motor) oil dispensed from a receptacle, dispenser, or storage tank, shall contain the viscosity grade classification preceded by the letters "SAE" in accordance with SAE International's latest version of SAE J300, "Engine Oil Viscosity Classification."~~

~~NOTE: If an invoice or receipt from service on an engine has limited room for identifying the viscosity, brand, and service category, then abbreviated versions of each may be used on the invoice or receipt and the letters "SAE" may be omitted from the viscosity classification.~~

~~(Note added 2014)~~

~~(Amended 2014)~~

~~2.33.1.2. Brand. The label on any vehicle engine (motor) oil container and the invoice or receipt from service on an engine that includes the installation of bulk vehicle engine (motor) oil dispensed from a receptacle, dispenser, or storage tank shall contain the name, brand, trademark, or trade name of the vehicle engine (motor) oil.~~

~~(Amended 2014)~~

~~2.33.1.3. Engine Service Category. The label on any vehicle engine (motor) oil container, receptacle, dispenser, or storage tank and the invoice or receipt from service on an engine that includes the installation of bulk vehicle engine (motor) oil dispensed from a receptacle, dispenser, or storage tank shall contain the engine service category, or categories, displayed in letters not less than 3.18 mm (1/8 in) in height, as defined by the latest version of SAE J183, "Engine Oil Performance and Engine Service Classification (Other than "Energy Conserving")," API Publication 1509, "Engine Oil Licensing and Certification System," European Automobile Manufacturers Association (ACEA), "European Oil Sequences," or other Vehicle or Engine Manufacturer standards as approved in Section 2.33.1.3.1. Vehicle or Engine Manufacturer Standard.~~

~~(Amended 2014)~~

~~2.33.1.3.1. Vehicle or Engine Manufacturer Standard. The label on any vehicle engine (motor) oil container, receptacle, dispenser, or storage tank and the invoice or receipt from service on an engine that includes the installation of vehicle engine (motor) oil dispensed from a receptacle, dispenser, or storage tank shall identify the specific vehicle or engine manufacturer standard, or standards, met in letters not less than 3.18 mm (1/8 in) in height. If the vehicle (motor) oil only meets a vehicle or engine manufacturer standard, the label must clearly identify that the oil is only intended for use where specifically recommended by the vehicle or engine manufacturer.~~

~~(Added 2014)~~

~~2.33.1.3.2. Inactive or Obsolete Service Categories. The label on any vehicle engine (motor) oil container, receptacle, dispenser, or storage tank and the invoice or receipt from service on an engine that includes the installation of bulk vehicle engine (motor) oil dispensed from a receptacle, dispenser, or storage tank shall bear a plainly visible cautionary statement in compliance with the latest version of SAE J183, Appendix A, whenever the vehicle engine (motor) oil in the container or in bulk does not meet an active API service category as defined by the latest version of SAE J183, "Engine Oil Performance and Engine Service Classification (Other than "Energy Conserving")." If a vehicle engine (motor) oil is identified as only meeting a vehicle or engine manufacturer standard, the labeling requirements in Section 2.33.1.3.1. Vehicle or Engine Manufacturer Standard applies.~~

~~(Amended 2014)~~

This publication is available free of charge from: https://doi.org/10.6028/NIST.SP.1253

~~**2.33.1.4. Tank Trucks or Rail Cars. – Tank trucks, rail cars, and other types of delivery trucks that are used to deliver bulk vehicle engine (motor) oil are not required to display the SAE viscosity grade and service category or categories on such tank trucks, rail cars, and other types of delivery trucks.**~~

~~**(Amended 2013 and 2014)**~~

~~**2.33.1.5. Documentation. – When the engine (motor) oil is sold in bulk, an invoice, bill of lading, shipping paper, or other documentation must accompany each delivery. This document must identify the quantity of bulk engine (motor) oil delivered as defined in Sections 2.33.1.1. Viscosity; 2.33.1.2. Brand; 2.33.1.3. Engine Service Category; the name and address of the seller and buyer; and the date and time of the sale. For inactive or obsolete service categories, the documentation shall also bear a plainly visible cautionary statement as required in Section 2.33.1.3.2. Inactive or Obsolete Service Categories. Documentation must be retained at the retail establishment for a period of not less than one year.**~~

~~**(Added 2013) (Amended 2014)**~~

~~**(Added 2012) (Amended 2013 and 2014)**~~

~~**2.34. Retail Sales of Electricity Sold as a Vehicle Fuel.**~~

~~**2.34.1. Definitions.**~~

~~**2.34.1.1. Electricity Sold as Vehicle Fuel. – Electrical energy transferred to and/or stored onboard an electric vehicle primarily for the purpose of propulsion.**~~

~~**2.34.1.2. Electric Vehicle Supply Equipment (EVSE). – The conductors, including the ungrounded, grounded, and equipment grounding conductors; the electric vehicle connectors; attachment plugs; and all other fittings, devices, power outlets, or apparatuses installed specifically for the purpose of measuring, delivering, and computing the price of electrical energy delivered to the electric vehicle.**~~

~~**2.34.1.3. Fixed Service. – Service that continuously provides the nominal power that is possible with the equipment as it is installed.**~~

~~**2.34.1.4. Variable Service. – Service that may be controlled resulting in periods of reduced, and/or interrupted transfer of electrical energy.**~~

~~**2.34.1.5. Nominal Power. – Refers to the "intended" or "named" or "stated" as opposed to "actual" rate of transfer of electrical energy (i.e., power).**~~

~~**2.34.2. Method of Sale. – All electrical energy kept, offered, or exposed for sale and sold at retail as a vehicle fuel shall be in units in terms of the megajoule (MJ) or kilowatt-hour (kWh). In addition to the fee assessed for the quantity of electrical energy sold, fees may be assessed for other services; such fees may be based on time measurement and/or a fixed fee.**~~

~~**2.34.3. Retail Electric Vehicle Supply Equipment (EVSE) Labeling.**~~

~~**(a) A computing EVSE shall display the unit price in whole cents (e.g., $0.12) or tenths of one cent (e.g., $0.119) on the basis of price per megajoule (MJ) or kilowatt-hour (kWh). In cases where the electrical energy is unlimited or free of charge, this fact shall be clearly indicated in place of the unit price.**~~

~~**(b) For fixed service applications, the following information shall be conspicuously displayed or posted on the face of the device:**~~

~~**(1) the level of EV service expressed as the nominal power transfer (i.e., nominal rate of electrical energy transfer), and**~~

~~(2) the type of electrical energy transfer (e.g., AC, DC, wireless).~~

~~(c) For variable service applications, the following information shall be conspicuously displayed or posted on the face of the device:~~

~~(1) the type of delivery (i.e., variable);~~

~~(2) the minimum and maximum power transfer that can occur during a transaction, including whether service can be reduced to zero;~~

~~(3) the condition under which variations in electrical energy transfer will occur; and~~

~~(4) the type of electrical energy transfer (e.g., AC, DC, wireless).~~

~~(d) Where fees will be assessed for other services in direct connection with the fueling of the vehicle, such as fees based on time measurement and/or a fixed fee, the additional fees shall be displayed.~~

~~(e) The EVSE shall be labeled in accordance with 16 CFR 309 – FTC Labeling Requirements for Alternative Fuels and Alternative Fueled Vehicles.~~

~~(f) The EVSE shall be listed and labeled in accordance with the National Electric Code® (NEC) NFPA 70, Article 625 Electric Vehicle Charging Systems (www.nfpa.org).~~

~~2.34.4. Street Sign Prices and Other Advertisements. – Where electrical energy unit price information is presented on street signs or in advertising other than on EVSE:~~

~~(a) The electrical energy unit price shall be in terms of price per megajoule (MJ) or kilowatt-hour (kWh) in whole cents (e.g., $0.12) or tenths of one cent (e.g., $0.119). In cases where the electrical energy is unlimited or free of charge, this fact shall be clearly indicated in place of the unit price.~~

~~(b) In cases where more than one electrical energy unit price may apply over the duration of a single transaction to sales to the general public, the terms and conditions that will determine each unit price and when each unit price will apply shall be clearly displayed.~~

~~(c) For fixed service applications, the following information shall be conspicuously displayed or posted:~~

~~(1) the level of EV service expressed as the nominal power transfer (i.e., nominal rate of electrical energy transfer), and~~

~~(2) the type of electrical energy transfer (e.g., AC, DC, wireless).~~

~~(d) For variable service applications, the following information shall be conspicuously displayed or posted:~~

~~(1) the type of delivery (i.e., variable);~~

~~(2) the minimum and maximum power transfer that can occur during a transaction, including whether service can be reduced to zero;~~

~~(3) the conditions under which variations in electrical energy transfer will occur; and~~

~~(4) the type of electrical energy transfer (e.g., AC, DC, wireless).~~

This publication is available free of charge from: https://doi.org/10.6028/NIST.SP.1253

This publication is available free of charge from: https://doi.org/10.6028/NIST.SP.1253

~~**Where fees will be assessed for other services in direct connection with the fueling of the vehicle, such as fees based on time measurement and/or a fixed fee, the additional fees shall be included on all street signs or other advertising.**~~

~~**(Added 2013)**~~

~~**2.35. Diesel Exhaust Fluid (DEF).**~~

~~**2.35.1. Definition.**~~

~~**2.35.1.1. Diesel Exhaust Fluid (DEF). – A preparation of aqueous urea [(NH2)2CO], containing 32.5 % by mass of technically-pure urea in high-purity water with quality characteristics defined by the latest version of ISO 22241, "Diesel engines – NOx reduction agent AUS 32."**~~

~~**2.35.2. Labeling of Diesel Exhaust Fluid (DEF). – DEF shall be labeled.**~~

~~**2.35.2.1. Retail Dispenser Labeling. – A label shall be clearly and conspicuously placed on the front panel of the Diesel Exhaust Fluid dispenser stating "for operation of selective catalytic reduction (SCR) converters in motor vehicles with diesel engines."**~~

~~**2.35.2.2. Documentation for Retailers of Bulk Product. – A DEF supplier shall provide, at the time of delivery of the bulk shipment of DEF, identification of the fluid's origin including the name of the fluid manufacturer, the brand name, trade name, or trademark, and a statement identifying the fluid as DEF conforming to specifications given in the latest version of ISO 22241, "Diesel engines – NOx reduction agent AUS 32." This information shall be provided by the supplier on an invoice, bill of lading, shipping paper, or other document.**~~

~~**2.35.2.3. Labeling of Packaged Product. – Any diesel exhaust fluid retail package shall bear a label that includes the name of the fluid manufacturer, the brand name, trade name, or trademark, a statement identifying the fluid as DEF conforming to specifications given in the latest version of ISO 22241 "Diesel engines – NOx reduction agent AUS 32," and the statement, "It is recommended to store DEF between 5 °C to 30 °C (23 °F to 86 °F)."**~~

~~**2.35.2.4. Documentation for Bulk Deliveries. – A carrier that transports or accepts for transportation any bulk shipment by tank truck, freight container, cargo tank, railcar, or any other vehicle used to transport or deliver bulk quantities of DEF shall, at the time of delivery of the DEF, provide identification of the fluid's origin including the name of the fluid manufacturer, the brand name, trade name, or trademark, and a statement identifying the fluid as DEF conforming to specifications given in the latest version of ISO 22241, "Diesel engines – NOx reduction agent AUS 32." This information shall be provided to the recipient on an invoice, bill of lading, shipping paper, or other document.**~~

~~**Effective date shall be January 1, 2016.**~~

~~**(Added 2014)**~~

~~**2.36. Transmission Fluid.**~~

~~**2.36.1. Products for Use in Lubricating Transmissions. Transmission fluids shall meet the original equipment manufacturer's requirements for those transmissions or have demonstrated performance claims to be suitable for use in those transmissions. Where a fluid can be licensed against an original equipment manufacturer's specification, evidence of current licensing by the marketer is acceptable documentation of performance against the specification. In the absence of a license from the original equipment manufacturer, adherence to the original equipment manufacturer's recommended requirements shall be assessed after testing per relevant methods available to the lubricants industry and the state regulatory agency. Suitability for use claims shall be based upon appropriate field, bench, and/or transmission rig testing. Any manufacturer of a transmission fluid making suitable for use claims shall provide, upon request by a duly authorized representative of the Director, credible documentation of such claims. If the product performance claims published by a blender and/or marketer are based on the**~~

This publication is available free of charge from: https://doi.org/10.6028/NIST.SP.1253

~~**claim(s) of one or more additive suppliers, documentation of the claims may be requested in confidence by a duly authorized representative of the Director. Supporting data may be supplied directly to the Director's office by the additive supplier(s).**~~

~~**(Added 2017)**~~

~~**2.36.1.1. Conformance. – Conformance of a fluid per Section 2.36.1. Products for Use in Lubricating Transmissions does not absolve the obligations of a fluid licensee with respect to the licensing original equipment manufacturer or the original equipment manufacturer's licensing agent(s), where relevant.**~~

~~**(Added 2017)**~~

~~**2.36.1.2. Transmission Fluid Additives. Any material offered for sale or sold as an additive to transmission fluids shall be compatible with the transmission fluid to which it is added, and shall meet all performance claims as stated on the label or published on any website referenced by the label. Any manufacturer of any such product sold in this state shall provide, upon request by a duly authorized representative of the Director, documentation of any claims made on their product label or published on any website referenced by the label.**~~

~~**(Added 2017)**~~

~~**2.36.2. Labeling and Identification of Transmission Fluid. Transmission fluid shall be labeled or identified as described below.**~~

~~**(Added 2017)**~~

~~**2.36.2.1. Container Labeling. – The label on a container of transmission fluid shall not contain any information that is false or misleading. Containers include bottles, cans, multi-quart or liter containers, pails, kegs, drums, and intermediate bulk containers (IBCs). In addition, each container of transmission fluid shall be labeled with the following:**~~

(a) ~~**the brand name;**~~

(b) ~~**the name and place of business of the manufacturer, packer, seller, or distributor;**~~

(c) ~~**the words "Transmission Fluid," which may be incorporated into a more specific description of transmission type such as "Automatic Transmission Fluid" or "Continuously Variable Transmission Fluid";**~~

(d) ~~**the primary performance claim or claims met by the fluid and reference to where any supplemental claims may be viewed (for example, website reference). Performance claims include but are not limited to those set by original equipment manufacturers and standards setting organizations such as SAE and JASO and are acknowledged by reference; and**~~

(e) ~~**an accurate statement of the quantity of the contents in terms of liquid measure.**~~

~~**(Added 2017)**~~

~~**2.36.2.2. Identification on Documentation. – Transmission fluid sold in bulk shall be identified on the manufacturer, packer, seller, or distributor invoice, bill of lading, shipping paper, or other documentation with the information listed below:**~~

~~**(a) the brand name;**~~

~~**(b) the name and place of business of the manufacturer, packer, seller, or distributor;**~~

~~**(c) the words "Transmission Fluid," which may be incorporated into a more specific description of transmission type such as "Automatic Transmission Fluid" or "Continuously Variable Transmission Fluid";**~~

This publication is available free of charge from: https://doi.org/10.6028/NIST.SP.1253

~~(d) the primary performance claim or claims met by the fluid or reference to where these claims may be viewed (for example, website reference). Performance claims include but are not limited to those set by original equipment manufacturers and standards setting organizations such as SAE and JASO and are acknowledged by reference; and~~

~~(e) an accurate statement of the quantity of the contents in terms of liquid measure.~~

~~(Added 2017)~~

~~2.36.2.3. Identification on Service Provider Documentation. Transmission fluid installed from a bulk tank at time of transmission service shall be identified on the customer invoice with the information listed below:~~

~~(a) the brand name;~~

~~(b) the name and place of business of the service provider;~~

~~(c) the words "Transmission Fluid," which may be incorporated into a more specific description of transmission type such as "Automatic Transmission Fluid" or "Continuously Variable Transmission Fluid";~~

~~(d) the primary performance claim or claims met by the fluid or reference to where these claims may be viewed (for example, website reference). Performance claims include but are not limited to those set by original equipment manufacturers and standards setting organizations such as SAE and JASO and are acknowledged by reference; and~~

~~(e) an accurate statement of the quantity of the contents in terms of liquid measure.~~

~~(Added 2017)~~

~~2.36.2.4. Bulk Delivery. When the transmission fluid is sold in bulk, an invoice, bill of lading, shipping paper, or other documentation must accompany each delivery. This document must identify the fluid as defined in Section 2.36.2.2. Identification on Documentation.~~

~~(Added 2017)~~

~~2.36.2.5. Storage Tank Labeling. Each storage tank of transmission fluid shall be labeled with the following:~~

~~(a) the brand name;~~

~~(b) the primary performance claim or claims met by the fluid or reference to where these claims may be viewed (for example, website reference). Performance claims include but are not limited to those set by original equipment manufacturers and standards setting organizations such as SAE and JASO and are acknowledged by reference.~~

~~(Added 2017)~~

~~2.36.3. Documentation of Claims Made Upon Product Label. Any manufacturer, packer, or distributor of any product subject to this article and sold in this state shall provide, upon request of duly authorized representatives of the Director, credible documentation of any claim made upon their product label, including claims made on any website referenced by said label. If the product performance claims published by a blender and/or marketer are based on the claim(s) of one or more additive suppliers, documentation of the claims may be requested in confidence by a duly authorized representative of the Director. Supporting data may be supplied directly to the Director's office by the additive supplier(s).~~

~~(Added 2017)~~

~~(Added 2017)~~

This publication is available free of charge from: https://doi.org/10.6028/NIST.SP.1253

[Current Sections 3. General, Section 4. Revocation of Conflicting Regulations, and Section 5. Effective Date will be renumbered editorially by NIST]

Section 3. Method of Sale of Fuels, Lubricants, and Automotive Products

3.1. General Information

3.1.1. Definitions. – For additional information on definitions refer to NIST Handbook 130, Uniform Fuels and Automotive Lubricants Regulation, Section 1. Definitions

3.1.2. Specifications. – For additional information specifications refer to NIST Handbook 130, Uniform Fuels and Automotive Lubricants Regulation, Section 2. Standard Specifications.

3.1.3. Identification, Classification, and Labeling. – For additional information on Identification, Classification and Labeling refer to NIST Handbook 130, Uniform Fuels and Automotive Lubricants Regulation, Section 3. Classification and Method of Sale.

3.2. The fuels, lubricants and automotive products below shall be sold by liquid measure. (see NIST Handbook 130, Uniform Weights and Measures Law, Section 17. Method of Sale.)

3.2.1. Gasoline and Gasoline-Oxygenate Blends.

3.2.2. Ethanol Flex Fuel.

3.2.3. Biodiesel and biodiesel blends.

3.2.4. Oil.

3.2.5. Diesel Exhaust fluid (DEF).

3.2.6. Transmission Fluid.

3.2.7. Diesel fuel.

3.2.8. Aviation turbine fuels.

3.2.9. Aviation gasoline.

3.2.10. Fuel Oils.

3.2.11. M85.

3.3. The fuels, lubricants and automotive products below shall be sold in the manner described.

3.3.1. Retail Sale of Kerosene from Bulk. – All kerosene kept, offered, or exposed for sale and sold from bulk at retail shall be in terms of the gallon or liter.
(Added 2012)

3.3.2. Liquefied Petroleum Gas. – All liquefied petroleum gas, including, but not limited to propane, butane, and mixtures thereof, shall be kept, offered, exposed for sale, or sold by the pound, metered cubic foot [*NOTE 7*, page 126] of vapor (defined as 1 ft^3 at 60 °F [15.6 °C]), or the gallon (defined as 231 in^3 at 60 °F [15.6 °C]). All metered sales by the gallon, except those using meters with a maximum rated capacity of

This publication is available free of charge from: https://doi.org/10.6028/NIST.SP.1253

20 gal/min or less, shall be accomplished by use of a meter and device that automatically compensates for temperature.

(Added 1986)

NOTE X: Sources: American National Standards Institute, Inc., "American National Standard for Gas Displacement Meters (500 Cubic Feet per Hour Capacity and Under)," First edition, 1974, and NIST Handbook 44, "Specifications, Tolerances, and Other Technical Requirements for Weighing and Measuring Devices."

3.3.3. Retail Sales of Natural Gas Sold as a Vehicle Fuel.

3.3.3.1. Definitions.

3.3.3.1.1. Compressed Natural Gas (CNG). – A gaseous fuel composed primarily of methane that is suitable for compression and dispensing into a fuel storage container(s) for use as an engine fuel.

(Amended 2016)

3.3.3.1.2. Gasoline Gallon Equivalent (GGE). – Gasoline gallon equivalent (GGE) means 2.567 kg (5.660 lb) of compressed natural gas.

(Amended 2016)

3.3.3.1.3. Diesel Gallon Equivalent (DGE). – Diesel gallon equivalent means 6.384 lb of compressed natural gas or 6.059 lb of liquefied natural gas.

(Added 2016)

3.3.3.1.4. Liquefied Natural Gas (LNG). – Natural gas, which is predominantly methane, that has been liquefied at – 162 °C (− 260 °F) at 14.696 psia and stored in insulated cryogenic fuel storage tanks for use as an engine fuel.

(Added 2016)

3.3.3.2. Method of Retail Sale and Dispenser Labeling.

3.3.3.2.1. Method of Retail Sale for Compressed Natural Gas. – All compressed natural gas kept, offered, or exposed for sale and sold at retail as a vehicle fuel shall be measured in terms of mass, and indicted in the gasoline gallon equivalent (GGE), diesel gallon equivalent (DGE) units, or mass.

(Amended 2016)

3.3.3.2.2. Dispenser Labeling Compressed Natural Gas. – All retail compressed natural gas dispensers shall be labeled with the equivalent conversion factor in terms of pounds (lb). The label shall be permanently and conspicuously displayed on the face of the dispenser and shall have the statement "1 Gasoline Gallon Equivalent (GGE) means 5.660 lb of Compressed Natural Gas" or "1 Diesel Gallon Equivalent (DGE) means 6.384 lb of Compressed Natural Gas" consistent with the method of sale used.

(Amended 2016)

3.3.3.2.3. Method of Retail Sale for Liquefied Natural Gas. – All liquefied natural gas kept, offered, or exposed for sale and sold at retail as a vehicle fuel shall be measured in mass and indicated in diesel gallon equivalent (DGE) units or mass.

(Added 2016)

3.3.3.2.4. Dispenser Labeling of Retail Liquefied Natural Gas. – All retail liquefied natural gas dispensers shall be labeled with the equivalent conversion factor in terms of pounds (lb). The label

This publication is available free of charge from: https://doi.org/10.6028/NIST.SP.1253

shall be permanently and conspicuously displayed on the face of the dispenser and shall have the statement "1 Diesel Gallon Equivalent (DGE) means 6.059 lb of Liquefied Natural Gas."

(Added 2016)

3.3.4. Retail Sales of Hydrogen Fuel (H).

3.3.4.1. Definitions of Hydrogen Fuel. - A fuel composed of molecular hydrogen intended for consumption in a surface vehicle or electricity production device with an internal combustion engine or fuel cell.

3.3.4.2. Method of Retail Sale and Dispenser Labeling. – All hydrogen fuel kept, offered, or exposed for sale and sold at retail shall be in mass units in terms of the kilogram. The symbol for hydrogen vehicle fuel shall be the capital letter "H" (the word Hydrogen may also be used).

3.3.4.3. Retail Dispenser Labeling.

(a) A computing dispenser must display the unit price in whole cents on the basis of price per kilogram.

(b) The service pressure(s) of the dispenser must be conspicuously shown on the user interface in bar or the SI unit of pascal (Pa) (e.g., MPa).

(c) The product identity must be shown in a conspicuous location on the dispenser.

(d) National Fire Protection Association (NFPA) labeling requirements also apply.

(e) Hydrogen shall be labeled in accordance with 16 CFR 309 – FTC Labeling Alternative Fuels.

3.3.4.4. Street Sign Prices and Advertisements.

(a) The unit price must be in terms of price per kilogram in whole cents (e.g., $3.49 per kg, not $3.499 per kg).

(b) The sign or advertisement must include the service pressure (expressed in megapascals) at which the dispenser(s) delivers hydrogen fuel (e.g., H35 or H70).

(Added 2010)

3.3.5. Retail Sales of Electricity Sold as a Vehicle Fuel.

3.3.5.1. Definitions.

3.3.5.1.1. Electricity Sold as Vehicle Fuel. – Electrical energy transferred to and/or stored onboard an electric vehicle primarily for the purpose of propulsion.

3.3.5.1.2. Electric Vehicle Supply Equipment (EVSE). – The conductors, including the ungrounded, grounded, and equipment grounding conductors; the electric vehicle connectors; attachment plugs; and all other fittings, devices, power outlets, or apparatuses installed specifically for the purpose of measuring, delivering, and computing the price of electrical energy delivered to the electric vehicle.

3.3.5.1.3. Fixed Service. – Service that continuously provides the nominal power that is possible with the equipment as it is installed.

3.3.5.1.4. Variable Service. – Service that may be controlled resulting in periods of reduced, and/or interrupted transfer of electrical energy.

This publication is available free of charge from: https://doi.org/10.6028/NIST.SP.1253

3.3.5.1.5. Nominal Power. – Refers to the "intended" or "named" or "stated" as opposed to "actual" rate of transfer of electrical energy (i.e., power).

3.3.5.2. Method of Sale. – All electrical energy kept, offered, or exposed for sale and sold at retail as a vehicle fuel shall be in units in terms of the megajoule (MJ) or kilowatt-hour (kWh). In addition to the fee assessed for the quantity of electrical energy sold, fees may be assessed for other services; such fees may be based on time measurement and/or a fixed fee.

3.3.5.3. Retail Electric Vehicle Supply Equipment (EVSE) Labeling.

(a) A computing EVSE shall display the unit price in whole cents (e.g., $0.12) or tenths of one cent (e.g., $0.119) on the basis of price per megajoule (MJ) or kilowatt-hour (kWh). In cases where the electrical energy is unlimited or free of charge, this fact shall be clearly indicated in place of the unit price.

(b) For fixed service applications, the following information shall be conspicuously displayed or posted on the face of the device:

(1) the level of EV service expressed as the nominal power transfer (i.e., nominal rate of electrical energy transfer), and

(2) the type of electrical energy transfer (e.g., AC, DC, wireless).

(c) For variable service applications, the following information shall be conspicuously displayed or posted on the face of the device:

(1) the type of delivery (i.e., variable);

(2) the minimum and maximum power transfer that can occur during a transaction, including whether service can be reduced to zero;

(3) the condition under which variations in electrical energy transfer will occur; and

(4) the type of electrical energy transfer (e.g., AC, DC, wireless).

(d) Where fees will be assessed for other services in direct connection with the fueling of the vehicle, such as fees based on time measurement and/or a fixed fee, the additional fees shall be displayed.

(e) The EVSE shall be labeled in accordance with 16 CFR 309 – FTC Labeling Requirements for Alternative Fuels and Alternative Fueled Vehicles.

(f) The EVSE shall be listed and labeled in accordance with the National Electric Code® (NEC) NFPA 70, Article 625 Electric Vehicle Charging Systems (www.nfpa.org).

3.3.5.4. Street Sign Prices and Other Advertisements. – Where electrical energy unit price information is presented on street signs or in advertising other than on EVSE:

(a) The electrical energy unit price shall be in terms of price per megajoule (MJ) or kilowatt-hour (kWh) in whole cents (e.g., $0.12) or tenths of one cent (e.g., $0.119). In cases where the electrical energy is unlimited or free of charge, this fact shall be clearly indicated in place of the unit price.

This publication is available free of charge from: https://doi.org/10.6028/NIST.SP.1253

(b) In cases where more than one electrical energy unit price may apply over the duration of a single transaction to sales to the general public, the terms and conditions that will determine each unit price and when each unit price will apply shall be clearly displayed.

(c) For fixed service applications, the following information shall be conspicuously displayed or posted:

(1) the level of EV service expressed as the nominal power transfer (i.e., nominal rate of electrical energy transfer), and

(2) the type of electrical energy transfer (e.g., AC, DC, wireless).

(d) For variable service applications, the following information shall be conspicuously displayed or posted:

(1) the type of delivery (i.e., variable);

(2) the minimum and maximum power transfer that can occur during a transaction, including whether service can be reduced to zero;

(3) the conditions under which variations in electrical energy transfer will occur; and

(4) the type of electrical energy transfer (e.g., AC, DC, wireless).

Where fees will be assessed for other services in direct connection with the fueling of the vehicle, such as fees based on time measurement and/or a fixed fee, the additional fees shall be included on all street signs or other advertising.

(Added 2013)

3.4. Classification, Identification, and Labeling for Sale.

In sunset publication year of 20XX to remove this section: The items in Section 3.4. Classification, Identification, and Labeling for Sale are also included as part the Uniform Fuels and Automotive Lubricants Regulation, Section 3. Method of Sale of Fuels, Lubricants, and Automotive Products. Starting with the 20XX NIST Handbook 130 the items in Section 3.4. Classification, Identification, and Labeling for Sale will no longer be included and only found in the Uniform Fuels and Automotive Lubricants Regulation.

3.4.1. Kerosene (or "Kerosine"). – All kerosene kept, offered, exposed for sale, or sold shall be identified as such and will include, with the word kerosene, an indication of its compliance with the latest version of ASTM Standard D3699, "Standard Specification for Kerosine."

Example:
1K Kerosene; Kerosene - 2K.

(Added 1983) (Included through 20XX Handbook)

3.4.2. Gasoline-Oxygenate Blends.

3.4.2.1. Labeling for Retail Sale. – Type of Oxygenate must be Disclosed. – All automotive gasoline or automotive gasoline-oxygenate blends kept, offered, or exposed for sale, or sold at retail containing at least 1.5 mass percent oxygen shall be identified as "with" or "containing" (or similar wording) the predominant oxygenate in the engine fuel. For example, the label may read "contains ethanol" or "with MTBE." The oxygenate contributing the largest mass percent oxygen to the blend shall be considered the predominant oxygenate. Where mixtures of only ethers are present, the retailer may post the predominant oxygenate followed by the phrase "or other ethers" or alternatively post the phrase "contains MTBE or other ethers." In addition, gasoline-methanol blend fuels containing more

This publication is available free of charge from: https://doi.org/10.6028/NIST.SP.1253

than 0.15 mass percent oxygen from methanol shall be identified as "with" or "containing" methanol. This information shall be posted on the upper 50 % of the dispenser front panel in a position clear and conspicuous from the driver's position in a type at least 12.7 mm (½ in) in height, 1.5 mm ($^{1}/_{16}$ in) stroke (width of type).

(Amended 1996) (Included through 20XX Handbook)

3.4.2.2. Documentation for Dispenser Labeling Purposes. – The retailer shall be provided, at the time of delivery of the fuel, on product transfer documents such as an invoice, bill of lading, shipping paper, or other documentation:

(a) Information that complies with 40 CFR z80.1503 when the fuel contains ethanol.

(b) For fuels that do not contain ethanol, information that complies with 40 CFR 80.1503 and a declaration of the predominant oxygenate or combination of oxygenates present in concentrations sufficient to yield an oxygen content of at least 1.5 mass percent in the fuel. Where mixtures of only ethers are present, the fuel supplier may identify either the predominant oxygenate in the fuel (i.e., the oxygenate contributing the largest mass percent oxygen) or alternatively, use the phrase "contains MTBE or other ethers."

(c) Gasoline containing more than 0.15 mass percent oxygen from methanol shall be identified as "with" or "containing" methanol.

(Added 1984) (Amended 1985, 1986, 1991, 1996, and 2014) (Included through 20XX Handbook)

3.4.2.3. EPA Labeling Requirements. – Retailers and wholesale purchaser-consumers of gasoline shall comply with the EPA pump labeling requirements for gasoline containing greater than 10 volume percent (v%) up to 15 volume percent (v%) ethanol (E15) under 40 CFR 80.1501. (For additional information, refer to Section 3.4.3.2. FTC Labeling Requirements.)

(Added 2018) (Included through 20XX Handbook)

3.4.3. Ethanol Flex Fuel.

3.4.3.1. How to Identify Ethanol Flex Fuel. – Ethanol flex fuel shall be identified as "Ethanol Flex Fuel or EXX Flex Fuel."

3.4.3.2. FTC Labeling Requirements. – Ethanol flex fuel shall be identified and labeled in accordance with the Federal Trade Commission Automotive Fuel Ratings, Certification and Posting Rule, 16 CFR 306, as amended. (For additional information, refer to Section 2.20.3. EPA Labeling Requirements.)

(Added 2007) (Amended 2014 and 2018) (Included through 20XX Handbook)

3.4.4. Biodiesel and Biodiesel Blends.

3.4.4.1. Identification of Product. – Biodiesel shall be identified by the term "Biodiesel" with the designation "B100." Biodiesel Blends shall be identified by the term "Biodiesel Blend."

3.4.4.2. Labeling of Retail Dispensers.

3.4.4.2.1. Labeling of Grade Required. – Biodiesel shall be identified by the grades S15 or S500. Biodiesel blends shall be identified by the grades No. 1-D, No. 2-D, or No. 4-D.

3.4.4.2.2. EPA Labeling Requirements Also Apply. – Retailers and wholesale purchaser-consumers of biodiesel blends shall comply with EPA pump labeling requirements for sulfur under 40 CFR 80.570.

This publication is available free of charge from: https://doi.org/10.6028/NIST.SP.1253

3.4.4.2.3. Automotive Fuel Rating. – Biodiesel and biodiesel blends shall be labeled with its automotive fuel rating in accordance with 16 CFR 306.

3.4.4.2.4. Biodiesel Blends. – When biodiesel blends greater than 20 % by volume are offered by sale, each side of the dispenser where fuel can be delivered shall have a label conspicuously placed that states "Consult Vehicle Manufacturer Fuel Recommendations." The lettering of this legend shall not be less than 6 mm ($^1/_4$ in) in height by 0.8 mm ($^1/_{32}$ in) stroke; block style letters and the color shall be in definite contrast to the background color to which it is applied.

3.4.4.3. Documentation for Dispenser Labeling Purposes. – The retailer shall be provided, at the time of delivery of the fuel, a declaration of the volume percent biodiesel on an invoice, bill of lading, shipping paper, or other document. This documentation is for dispenser labeling purposes only; it is the responsibility of any potential blender to determine the amount of biodiesel in the diesel fuel prior to blending.

3.4.4.4. Exemption. – Biodiesel blends that contain less than or equal to 5 % biodiesel by volume are exempt from the requirements of Sections 3.4.4.1. Identification of Product, 3.4.4.2. Labeling of Retail Dispensers, and 3.4.4.3. Documentation for Dispenser Labeling Purposes when it is sold as diesel fuel.

(Added 2008) (Included through 20XX Handbook)

3.4.5. Oil.

3.4.5.1. Labeling of Vehicle Engine (Motor) Oil. – Vehicle engine (motor) oil shall be labeled.

3.4.5.1.1. Viscosity. – The label on any vehicle engine (motor) oil container, receptacle, dispenser, or storage tank, and any invoice or receipt from service on an engine that includes the installation of vehicle engine (motor) oil dispensed from a receptacle, dispenser, or storage tank, shall contain the viscosity grade classification preceded by the letters "SAE" in accordance with SAE International's latest version of SAE J300, "Engine Oil Viscosity Classification."

NOTE: If an invoice or receipt from service on an engine has limited room for identifying the viscosity, brand, and service category, then abbreviated versions of each may be used on the invoice or receipt and the letters "SAE" may be omitted from the viscosity classification.

(Note added 2014)

(Amended 2014)

3.4.5.1.2. Brand. – The label on any vehicle engine (motor) oil container and the invoice or receipt from service on an engine that includes the installation of bulk vehicle engine (motor) oil dispensed from a receptacle, dispenser, or storage tank shall contain the name, brand, trademark, or trade name of the vehicle engine (motor) oil.

(Amended 2014)

3.4.5.1.3. Engine Service Category. – The label on any vehicle engine (motor) oil container, receptacle, dispenser, or storage tank and the invoice or receipt from service on an engine that includes the installation of bulk vehicle engine (motor) oil dispensed from a receptacle, dispenser, or storage tank shall contain the engine service category, or categories, displayed in letters not less than 3.18 mm ($^1/_8$ in) in height, as defined by the latest version of SAE J183, "Engine Oil Performance and Engine Service Classification (Other than "Energy Conserving")," API Publication 1509, "Engine Oil Licensing and Certification System," European Automobile Manufacturers Association (ACEA), "European Oil Sequences," or other Vehicle or Engine Manufacturer standards as approved in Section 3.4.5.1.3.1. Vehicle or Engine Manufacturer Standard.

(Amended 2014)

This publication is available free of charge from: https://doi.org/10.6028/NIST.SP.1253

3.4.5.1.3.1. Vehicle or Engine Manufacturer Standard. – The label on any vehicle engine (motor) oil container, receptacle, dispenser, or storage tank and the invoice or receipt from service on an engine that includes the installation of vehicle engine (motor) oil dispensed from a receptacle, dispenser, or storage tank shall identify the specific vehicle or engine manufacturer standard, or standards, met in letters not less than 3.18 mm ($^{1}/_{8}$ in) in height. If the vehicle (motor) oil only meets a vehicle or engine manufacturer standard, the label must clearly identify that the oil is only intended for use where specifically recommended by the vehicle or engine manufacturer.

(Added 2014)

3.4.5.1.3.2. Inactive or Obsolete Service Categories. – The label on any vehicle engine (motor) oil container, receptacle, dispenser, or storage tank and the invoice or receipt from service on an engine that includes the installation of bulk vehicle engine (motor) oil dispensed from a receptacle, dispenser, or storage tank shall bear a plainly visible cautionary statement in compliance with the latest version of SAE J183, Appendix A, whenever the vehicle engine (motor) oil in the container or in bulk does not meet an active API service category as defined by the latest version of SAE J183, "Engine Oil Performance and Engine Service Classification (Other than "Energy Conserving")." If a vehicle engine (motor) oil is identified as only meeting a vehicle or engine manufacturer standard, the labeling requirements in Section 3.4.5.1.3.1. Vehicle or Engine Manufacturer Standard applies.

(Amended 2014)

3.4.5.1.4. Tank Trucks or Rail Cars. – Tank trucks, rail cars, and other types of delivery trucks that are used to deliver bulk vehicle engine (motor) oil are not required to display the SAE viscosity grade and service category or categories on such tank trucks, rail cars, and other types of delivery trucks.

(Amended 2013 and 2014)

3.4.5.1.5. Documentation. – When the engine (motor) oil is sold in bulk, an invoice, bill of lading, shipping paper, or other documentation must accompany each delivery. This document must identify the quantity of bulk engine (motor) oil delivered as defined in Sections 3.4.5.1.1. Viscosity; 3.4.5.1.2. Brand; 3.4.5.1.3. Engine Service Category; the name and address of the seller and buyer; and the date and time of the sale. For inactive or obsolete service categories, the documentation shall also bear a plainly visible cautionary statement as required in Section 3.4.5.1.3.2. Inactive or Obsolete Service Categories. Documentation must be retained at the retail establishment for a period of not less than one year.

(Added 2013) (Amended 2014)

(Added 2012) (Amended 2013 and 2014) (Included through 20XX Handbook)

3.4.6. Diesel Exhaust Fluid (DEF).

3.4.6.1. Definition.

3.4.6.1.1. Diesel Exhaust Fluid (DEF). – A preparation of aqueous urea [(NH2)2CO], containing 32.5 % by mass of technically-pure urea in high-purity water with quality characteristics defined by the latest version of ISO 22241, "Diesel engines - NOx reduction agent AUS 32."

3.4.6.2. Labeling of Diesel Exhaust Fluid (DEF). – DEF shall be labeled.

3.4.6.2.1. Retail Dispenser Labeling. – A label shall be clearly and conspicuously placed on the front panel of the Diesel Exhaust Fluid dispenser stating, "for operation of selective catalytic reduction (SCR) converters in motor vehicles with diesel engines."

This publication is available free of charge from: https://doi.org/10.6028/NIST.SP.1253

3.4.6.2.2. Documentation for Retailers of Bulk Product. – A DEF supplier shall provide, at the time of delivery of the bulk shipment of DEF, identification of the fluid's origin including the name of the fluid manufacturer, the brand name, trade name, or trademark, and a statement identifying the fluid as DEF conforming to specifications given in the latest version of ISO 22241, "Diesel engines - NOx reduction agent AUS 32." This information shall be provided by the supplier on an invoice, bill of lading, shipping paper, or other document.

2.35.2.3. Labeling of Packaged Product. – Any diesel exhaust fluid retail package shall bear a label that includes the name of the fluid manufacturer, the brand name, trade name, or trademark, a statement identifying the fluid as DEF conforming to specifications given in the latest version of ISO 22241 "Diesel engines - NOx reduction agent AUS 32," and the statement, "It is recommended to store DEF between – 5 °C to 30 °C (23 °F to 86 °F)."

2.35.2.4. Documentation for Bulk Deliveries. – A carrier that transports or accepts for transportation any bulk shipment by tank truck, freight container, cargo tank, railcar, or any other vehicle used to transport or deliver bulk quantities of DEF shall, at the time of delivery of the DEF, provide identification of the fluid's origin including the name of the fluid manufacturer, the brand name, trade name, or trademark, and a statement identifying the fluid as DEF conforming to specifications given in the latest version of ISO 22241, "Diesel engines - NOx reduction agent AUS 32." This information shall be provided to the recipient on an invoice, bill of lading, shipping paper, or other document.

Effective date shall be January 1, 2016.

(Added 2014) (Included through 20XX Handbook)

3.4.7. Transmission Fluid.

3.4.7.1. Products for Use in Lubricating Transmissions. – Transmission fluids shall meet the original equipment manufacturer's requirements for those transmissions or have demonstrated performance claims to be suitable for use in those transmissions. Where a fluid can be licensed against an original equipment manufacturer's specification, evidence of current licensing by the marketer is acceptable documentation of performance against the specification. In the absence of a license from the original equipment manufacturer, adherence to the original equipment manufacturer's recommended requirements shall be assessed after testing per relevant methods available to the lubricants industry and the state regulatory agency. Suitability for use claims shall be based upon appropriate field, bench, and/or transmission rig testing. Any manufacturer of a transmission fluid making suitable-for-use claims shall provide, upon request by a duly authorized representative of the Director, credible documentation of such claims. If the product performance claims published by a blender and/or marketer are based on the claim(s) of one or more additive suppliers, documentation of the claims may be requested in confidence by a duly authorized representative of the Director. Supporting data may be supplied directly to the Director's office by the additive supplier(s).

(Added 2017)

3.4.7.1.1. Conformance. – Conformance of a fluid per Section 2.36.1. Products for Use in Lubricating Transmissions does not absolve the obligations of a fluid licensee with respect to the licensing original equipment manufacturer or the original equipment manufacturer's licensing agent(s), where relevant.

(Added 2017)

3.4.7.1.2. Transmission Fluid Additives. – Any material offered for sale or sold as an additive to transmission fluids shall be compatible with the transmission fluid to which it is added and shall meet all performance claims as stated on the label or published on any website referenced by the label. Any manufacturer of any such product sold in this state shall provide, upon request by a

This publication is available free of charge from: https://doi.org/10.6028/NIST.SP.1253

duly authorized representative of the Director, documentation of any claims made on their product label or published on any website referenced by the label.

(Added 2017)

3.4.7.2. Labeling and Identification of Transmission Fluid. – Transmission fluid shall be labeled or identified as described below.

(Added 2017)

3.4.7.2.1. Container Labeling. – The label on a container of transmission fluid shall not contain any information that is false or misleading. Containers include bottles, cans, multi-quart or liter containers, pails, kegs, drums, and intermediate bulk containers (IBCs). In addition, each container of transmission fluid shall be labeled with the following:

(a) the brand name;

(b) the name and place of business of the manufacturer, packer, seller, or distributor;

(c) the words "Transmission Fluid," which may be incorporated into a more specific description of transmission type such as "Automatic Transmission Fluid" or "Continuously Variable Transmission Fluid";

(d) the primary performance claim or claims met by the fluid and reference to where any supplemental claims may be viewed (for example, website reference). Performance claims include but are not limited to those set by original equipment manufacturers and standards setting organizations such as SAE and JASO and are acknowledged by reference; and

(e) an accurate statement of the quantity of the contents in terms of liquid measure.

(Added 2017)

3.4.7.2.2. Identification on Documentation. – Transmission fluid sold in bulk shall be identified on the manufacturer, packer, seller, or distributor invoice, bill of lading, shipping paper, or other documentation with the information listed below:

(a) the brand name;

(b) the name and place of business of the manufacturer, packer, seller, or distributor;

(c) the words "Transmission Fluid," which may be incorporated into a more specific description of transmission type such as "Automatic Transmission Fluid" or "Continuously Variable Transmission Fluid";

(d) the primary performance claim or claims met by the fluid or reference to where these claims may be viewed (for example, website reference). Performance claims include but are not limited to those set by original equipment manufacturers and standards setting organizations such as SAE and JASO and are acknowledged by reference; and

(e) an accurate statement of the quantity of the contents in terms of liquid measure.

(Added 2017)

3.4.7.2.3. Identification on Service Provider Documentation. – Transmission fluid installed from a bulk tank at time of transmission service shall be identified on the customer invoice with the information listed below:

This publication is available free of charge from: https://doi.org/10.6028/NIST.SP.1253

(a) the brand name;

(b) the name and place of business of the service provider;

(c) the words "Transmission Fluid," which may be incorporated into a more specific description of transmission type such as "Automatic Transmission Fluid" or "Continuously Variable Transmission Fluid";

(d) the primary performance claim or claims met by the fluid or reference to where these claims may be viewed (for example, website reference). Performance claims include but are not limited to those set by original equipment manufacturers and standards setting organizations such as SAE and JASO and are acknowledged by reference; and

(e) an accurate statement of the quantity of the contents in terms of liquid measure.

(Added 2017)

3.4.7.2.4. Bulk Delivery. – When the transmission fluid is sold in bulk, an invoice, bill of lading, shipping paper, or other documentation must accompany each delivery. This document must identify the fluid as defined in Section 2.36.2.2. Identification on Documentation.

(Added 2017)

3.4.7.2.5. Storage Tank Labeling. – Each storage tank of transmission fluid shall be labeled with the following:

(a) the brand name;

(b) the primary performance claim or claims met by the fluid or reference to where these claims may be viewed (for example, website reference). Performance claims include but are not limited to those set by original equipment manufacturers and standards-setting organizations such as SAE and JASO and are acknowledged by reference.

(Added 2017)

3.4.7.3. Documentation of Claims Made Upon Product Label. – Any manufacturer, packer, or distributor of any product subject to this article and sold in this state shall provide, upon request of duly authorized representatives of the Director, credible documentation of any claim made upon their product label, including claims made on any website referenced by said label. If the product performance claims published by a blender and/or marketer are based on the claim(s) of one or more additive suppliers, documentation of the claims may be requested in confidence by a duly authorized representative of the Director. Supporting data may be supplied directly to the Director's office by the additive supplier(s).

(Added 2017)

(Added 2017) (Included through 20XX NIST Handbook 130)

[OTHER PARTS OF SEC. B WILL BE RENUMBERED EDITORIALLY]

Background/Discussion:
For more information or to provide comment, please contact:

Mr. Bill Striejewske, Chairman of the Fuels and Lubricants Subcommittee
Nevada Department of Agriculture/Bureau of Petroleum Technology
(775) 353-3792, wstriejewske@agri.state.nv.us

The Method of Sale of Commodities and the Uniform Fuels and Automotive Lubricants Regulations have different information for the method of sale for kerosene, liquefied petroleum gas, natural gas fuels, and diesel exhaust fluid.

This publication is available free of charge from: https://doi.org/10.6028/NIST.SP.1253

This proposal is to integrate the information from both regulations to create identical method of sale language in the two regulations.

Information for the method of sale for fuels, lubricants and automotive products currently can appear in the handbook in either the Uniform Regulation for the Method of Sale of Commodities and the Uniform Fuels and Automotive Lubricants Regulation. Sometimes the information for the same product is different in the two regulations which creates an added burden when maintaining and updating the handbook. This proposal is to consolidate and reorganize that information into the Uniform regulation for the Method of Sale of Commodities. This proposal is not intended to modify a specific method of sale. Those modifications should be considered separately by product.

At the 2018 Interim Meeting, Mr. Chuck Corr (ADM) spoke on behalf of a work group under FALS and provided an overview of the Block 2 agenda items. Mr. Corr stated the intent of this item is to reorganize and harmonize language only, and not to make any substantial changes to the language. Mr. Bill Striejewske, Chairman FALS, commented that FALS discussed these agenda items during their meeting and had concerns about possible conflicts between this item and the NIST Handbook 130 working group (Item FLR-9). Mr. Tim Elliott (Washington) commented that all state officials review the proposed language for possible conflicts with state regulations. Mr. Mike Sikula (New York) commented that there is inconsistency between FTC language within 16 CFR 306 and this proposed language related to past editions of the NIST Handbook 130. Mr. Sikula stated that NIST Handbook 130 suggests the most current version of the regulation, and FTC references a specific version. Mr. Sikula believes this inconsistency should be resolved prior to adoption. For these reasons, the L&R Committee decided to Assign this block of items to FALS for further work.

At the 2018 NCWM Annual Meeting Mr. Striejewske (FALS Chair) updated the Committee that this item has undergone a major overhaul within the last six months. The submitter is currently contacting each state to see how it impacts the states. It was also noted that if L&R Item FLR-9 was adopted, sections of this item would need to be updated to show the reflect the most recent language as it moves forward. FALS agreed to replace the Method of Sale and Fuels and Lubricants language that was developed at the 2018 Fall Regional Meetings. The developed language will appear in the 2019 NCWM Publication 15.

At the 2019 NCWM Interim Meeting comments from regulators and associate members within FALS indicated that they believe FRL-1 is fully developed and ready to be voted on while recognizing that further development is needed regarding MOS-1. After reviewing the comments, the Committee did not assign the same status to both items and they were removed as being a blocked item. FLR-1 is recommended as a Voting item while MOS-1 is assigned back to FALS for additional development.

At the 2019 NCWM Annual Meeting Mr. Striejewske (FALS Chair) reported that work continues within FALS on this item. Mr. Tim Elliott (Washington) remarked this item does not delete any sections but moved sections around from non-food into fuels. A controversial area within this item is a listing of items sold by liquid measure and why are they being specified within this section. Mr. Elliott would like feedback from the regions as they review this item as they prepare for modified language to be released within the Fall regional reports.

Regional Association Comments:
At the 2018 WWMA Annual Meeting, Mr. Tim Elliott (Washington) presented updated information on this item that is currently assigned to FALS. Mr. Elliott commented that the language contained on the agenda for the WWMA will have significant revisions due to feedback heard at the NCWM 2018 Annual meeting and language within the agenda is no longer relevant. FALS expects the updated proposal language prior to the NCWM Interim Meeting. The WWMA recommends this item remain assigned to FALS.

At the 2018 SWMA Annual Meeting, Mr. Corr (ADM) provided a presentation with an overview of the latest changes to the item under consideration. The Committee encourages the work of the focus group to get this fully developed and would like to have this reviewed at FALS.

At the 2018 NEWMA Interim Meeting, Mr. Corr provided presentation on this item. Mr. Corr commented that the purpose of these items is to reorganize but not change any meanings in NIST Handbook 130. He commented that language is being amended and will be provided for all regions to review. Mr. Corr stated that conferees should disregard the language in the NEWMA L&R Interim Agenda. There will be modified language that will be proposed

This publication is available free of charge from: https://doi.org/10.6028/NIST.SP.1253

in NCWM Publication 15 for the 2019 Interim Meeting. Mr Sikula (New York) had a question regarding the words "or sold" which are in the current handbook language pertaining to kerosene, which are inconsistent with the language of other items. The words "or sold" should be replaced with "exposed for sale". Mr. Corr suggested that this would be a substantive change and might change the intent of the proposal. The Chairman commented that the testimony of Mr. Sikula be directed to Mr. Corr for further consideration. Mr. Walt Rimmert (Pennsylvania) supported Mr. Sikula's suggestion that the words "or sold" should be removed. Mr. James Cassidy (Massachusetts) suggested that this comment should be brought to FALS and ask if they are willing to make the changes during this cycle. Mr. Jim McInerny (Connecticut) asked how this would affect states that do not adopt the Engine Fuels Regulations? Mr. McInerny has concerns with labeling requirements that specify "conforms with ASTM standards", due to the fact that some jurisdictions may not adhere to ASTM standards. After considerable discussion the committee designated this item with an Assigned status, and it be returned to FALS for additional development.

During the 2019 NEWMA Annual Meeting, Mr. Kevin Adlam (Archer Daniels Midland) made a presentation on behalf of Mr. Chuck Corr to explain the intent of the item and why it was separated from FLR-1 and remarked that the task group is looking for feedback. Mr. Mike Sikula (New York) asked if any of the information is technical in nature, or if it is simply moving identical language from one section to the other. Ms. Lisa Warfield (NIST Technical Advisor) commented that she is recommending that there should be a way to capture the original date and relocation to new sections within the regulations. This would inform the user when it was originally adopted and then when it was relocated to a new regulation. Mr. Jim McInerny (Connecticut), asked if the section of the NIST Handbook where it will be taken from will clarify it has been moved to a different section. Ms. Warfield commented that she has concern for placing this regulation in only one section since some states do not adopt both the Method of Sale and the Fuels Regulations. Ms. Warfield also commented that Section 3.2. is not necessary and should be stricken. Mr. Sikula suggests that NEWMA question why the Conference is working on this proposal and has concerns we will not have anything significant to show for the work. Mr. Walt Remmert (Pennsylvania) recommends that we continue to work on this item since it is already in development and wants items that appear in two regulations to be identical. The Committee wants to see how the final version of the language will appear in the handbook and encourages the submitter to continue to develop it. NEWMA is recommending this to remain an Assigned Item.

At the 2018 CWMA Interim Meeting, Mr. Corr (ADM) commented there is modified language that supersedes the current language that appears in the CWMA Interim Agenda. He then gave a presentation about the purpose of the proposal. The new language does not change the intent. Mr. Ron Hayes (Missouri) commented that the regulation of fuel quality was incorporated into the method of sale in 1984. He does not believe it is inappropriate to have fuel quality items in the method of sale, but he does support the proposal to harmonize the sections of NIST Handbook 130, and to remove unnecessary redundancies. The Committee supports further development of this item through the Fuels and Lubricants Subcommittee, and therefore recommends Assigned status for this item.

At the 2019 CWMA Annual Meeting Mr. Corr (ADM) and submitter of the item gave a presentation to explain the purpose of this item and why it was removed from its previous Block with FLR-1. The status of this item is Assigned, and the task group is working to further develop the proposal for the future. Mr. Corr requested that the Committee keeps track of what criteria are used when adding language to Section B. Ms. Lisa Warfield (NIST Technical Advisor) commented that she had suggested changes for the task group for consideration and would forward them to the submitter. The Committee agrees this item should continue with as an Assigned item.

Additional letters, presentations, and data may have been part of the Committee's consideration and were posted on the NCWM website during the time this item was on the Committee's agenda. To the extent possible, comments and positions from such documents have been summarized in the committee's report along with comments heard during the Committee's hearings.

MOS-5 V Section 1. Food Products and Section 2. Non-Food Products

(This item was Adopted)

Source:
Los Angeles County, California (2016)

This publication is available free of charge from: https://doi.org/10.6028/NIST.SP.1253

Purpose:
Clarify and formalize the long-standing, fundamental, core tenet of legal metrology and weights and measures regulation that the sale of any commodity, in any form or by any method, be according to legally-recognized, traceable units of measure.

Item Under Consideration:
Amend NIST Handbook 130, Uniform Regulation for the Method of Sale of Commodities as follows:

Preamble:

The purpose of this regulation is to require accurate and adequate information about commodities so that purchasers can make price and quantity comparisons.

Packages and their labels should enable consumers to obtain accurate information as to the quantity of the contents and should facilitate value comparisons. Equally, sales of commodities from bulk should be according to methods and units readily recognized and understood by, both, buyer and seller.
(Added 1989) (Amended 2019)

Section 1. Food Products [*NOTE 1*, page 107]

Unless otherwise specified or specifically permitted, the sale of any food product, whether sold from bulk or in packaged form, shall be only according to a unit of measure or weight that meets all of the following criteria:

(1) Is recognized and defined by NIST as legal for use in commerce

(2) Has been published in the "Federal Register"; and

(3) The measurement values have metrological traceability *(NOTE 2,* **page 107***)* **to a national standard**

NOTE: Sale of a product or commodity according to count, where appropriate to be fully informative to facilitate value comparison, is permissible as a method of sale.
(**Added 2019)**

Section 2. Non-food Products [*NOTE 1*, page 107]

Unless otherwise specified or specifically permitted, the sale of any non-food product, whether sold from bulk or in packaged form, shall be only according to a unit of measure or weight that meets all of the following criteria:

(1) Is recognized and defined by NIST as legal for use in commerce

(2) Has been published in the "Federal Register"; and

(3) The measurement values have metrological traceability *(NOTE 2,* **page107***)* **to a national standard**

Note: Sale of a product or commodity according to count, where appropriate to be fully informative to facilitate value comparison, is permissible as a method of sale.
(Added 2019)

Background/Discussion:
Much discussion and debate has been undertaken within the NCWM over the past two years regarding proposals for methods of sale of commodities (specifically, liquefied natural gas and compressed natural gas as vehicle fuels) based upon "equivalencies" to other methods of sale for different commodities (in these recent cases, based upon calculated average energy content comparisons to gasoline or diesel fuel). With the exception of a singular commodity,

This publication is available free of charge from: https://doi.org/10.6028/NIST.SP.1253

compressed natural gas, for which gasoline-liter-equivalent and gasoline-gallon-equivalent methods of sale were permitted some 20 years ago, the methods of sale for all other commodities have historically and consistently been established based upon legally-recognized units of weight or measure that are traceable to national standards maintained by NIST, the sole exceptions (found in interpretations and guidelines) being specific fresh vegetable commodities permitted to be sold by "head" or "bunch." Discussions surrounding considerations of "equivalency" units have raised the potential for untold similar proposals to establish methods of sale for countless competing products in the marketplace claiming comparisons of performance, quality, energy or nutritional content, or other factors which can be subjective, widely varying due to inconsistent chemical or biological makeup, or a host of other influences that are, or may be, based upon little to no scientific or metrologically sound and traceable determinations or calculations.

While a core tenet of weights and measures regulation and legal metrology – whether regarding design and function of weighing and measuring devices or sales of commodities - has always been widely recognized to require employment of units of measure that are recognized and published as legal for use and having metrological traceability, clear language in model laws and regulations developed by NCWM and published in NIST Handbooks is absent, likely never heretofore being deemed necessary due to the well-established, long-held tenet. This proposal serves to codify, memorialize, and specifically clarify that tenet as a formal adoption in the Uniform Regulation for the Method of Sale of Commodities to ensure against potentially misleading, confusing, or unclear business practices in commerce, whether in sales from bulk or in labeling of packaged commodities, that may be based upon observations, calculations, assumptions, or other considerations that may be subjective and not metrologically traceable.

At the 2016 NCWM Interim Meeting, Mr. Kurt Floren (Los Angeles County, California) remarked that this would codify a long-standing practice. This item is not intended to interfere with the current debate on liquefied natural gas (LNG). Mr. Floren encouraged the item on LNG to have a vote prior to this item. If the LNG proposal is adopted, this item could be amended from the floor of the conference. A former regulator remarked that Uniform Weights and Measures Law, Section (n) allows the term or unit of weight or measure be used if it is determined that an existing or firmly established practice. This proposal conflicts with NIST Handbook 130, Weights and Measures Law Section 12(n) that states this is a state function, not NIST controlled. The term on "traceability" is in NIST Handbook 130, Uniform Weights and Measures Law. NIST remarked that when changes are made to NIST SP 811, "The NIST Guide for use of International System of Units" or NIST SP 330, "The International System of Units (SI)" it is required that a Federal Register notice (FRN) be done.

The Committee is unclear as to what issue this proposal resolves. The Committee would also like to know what impact this would have for all items covered under the current Method of Sale of Commodities Regulation. The Committee agreed to move this forward as a Developing Item to allow the submitter to develop additional data and to have the Regions submit feedback. At the 2016 NCWM Annual Meeting there were no updates for the Committee.

At the 2017 NCWM Interim Meeting, Mr. Floren commented this item was delayed pending the outcome of a former L&R agenda item pertaining to compressed natural gas. The Committee agreed unanimously that this is ready as a Voting item.

At the 2017 NCWM Annual Meeting, Mr. Floren submitted modified language to the Committee for consideration. This modified language was due to the adoption of NIST Handbook 130, Method of Sale Regulation, Section 2.27.1. Definitions and a minor modification to Section 1. Food Products (b) to state that it is at the discretion of the State Director. There were several voices that supported this item or concept. A retired New York regulator expressed his objection to this item in its entirety. He believes the Uniform Regulation is specific for the items having a uniform method of sale. He also stated NCWM's authority does not extend to impact all products and commodities. This item was returned to Committee for future consideration.

At the 2018 NCWM Interim Meeting, Mr. Floren submitted modified language to address some concerns heard at the fall regional meetings. Many comments heard regarding this proposal were both in support and opposition. The Committee feels that the comments received were philosophical in nature. The L&R Committee believes this item is fully developed and recommends it as a Voting status.

This publication is available free of charge from: https://doi.org/10.6028/NIST.SP.1253

At the 2018 NCWM Annual Meeting, the Committee reviewed a letter of opposition from Mr. Ross Andersen (New York, retired). Mr. Andersen believes there is no compelling need or justification for this language to be placed into NIST Handbook 130. Mr. Andersen believes that NCWM has no authority to adopt such language. The NIST Technical Advisor clarified that NIST roles and responsibilities are not addressed in the "Organic Act" as stipulated in Mr. Andersen's letter. They also clarified when this initial proposal was being developed the submitter had worked with senior managers at NIST OWM.

At the 2019 NCWM Interim Meeting spirited debate was had regarding this item. Regulators continue to have a divided opinion as to whether mandated units prescribed regarding method of sale is appropriate for NIST Handbook 130. Comments were heard from regulators in favor and in opposition of this proposal. Mr. Tim Chesser (Arkansas) feels this proposed change is too restrictive, taking authority away from local jurisdictions. Mr. Guay (Procter Gamble) stated that he believes the item represented a good standard but not a good regulation. The Committee feels the item is however fully developed and recommends Voting status.

At the 2019 NCWM Annual Meeting, Chris Guay (Procter and Gamble) stated this is a good standard but not a regulation. His company is seeing the future of specialty products that will be sold by count. He also stated that the net contents will be a regulatory requirement but not what consumers want. Several state members also opposed this item. Mr. Kurt Floren (submitter) stated that this is already in place and it is a common-sense proposal. You provide accurate information to have price comparisons. There were many that spoke in support of this item. It is recognized and understood that items may come up in the future and the developer can always come to the conference. Mr. Floren reminded members that the basis of what we do, and this is clear guidance for those that regulate.

Regional Association Comments:
At the WWMA 2018 Annual Meeting, the Committee recognized there were some amendments to this language at the 2018 Annual NCWM Meeting (printed on the addendum, but not in NCWM Publication 16). Mr. Steven Harrington (Oregon) commented that he supports this item. Ms. Lisa Warfield (NIST OWM) stated that Mr. Floren, (Los Angeles County, California) worked closely with NIST regarding this language and NIST finds no conflict with authority or jurisdiction. Mr. Floren indicates that there are no additional updates required for this item to address concerns raised at the 2018 Annual NCWM Meeting. The Committee believes that disagreements regarding this proposal are philosophical in nature and will not be resolved with additional language changes. Furthermore, the Committee believes that some jurisdictions may not have had time to fully vet the changes on the 2018 Annual NCWM addendum and recommends this item should be assigned as a Voting Item.

At the 2018 SWMA 2018 Annual Meeting, membership heard no comments on this item. The Committee believes that this item is fully developed and recommends this as a Voting item and to let membership decide at the NCWM Annual meeting.

At the NEWMA 2018 Interim Meeting, Mr. Ethan Bogren (Westchester County, New York) commented that this item has been through the conference in several different forms. There are philosophical disagreements and he does not believe it will change. Mr. Bogren believes this item should be withdrawn. Mr. Mike Sikula (New York) opposed this item. Chairman Lou Sakin (Massachusetts) commented that NIST Handbook 130 is a model legislation document, not statute and states use these model documents for different purposes. Mr. Walt Remmert (Pennsylvania) commented that the NIST Handbook 130 makes recommendations on specific items, but this is a general provision, and is unnecessary. The Committee recommends this item be withdrawn since it did not garner sufficient support and did not change significantly on the NCWM L&R Addendum report.

At the 2019 NEWMA Annual Meeting, Mr. Sikula indicated he does not support this item because New York sells items without a traceable unit of measure. Ms. Lisa Warfield (NIST Technical Advisor) commented that the submitter of this item revised this proposal prior to it being voted on at the NCWM July 2018 Annual Meeting. The Committee believes the item is fully developed and is ready for voting status.

At the CWMA 2018 Interim Meeting, Chris Guay (Procter and Gamble) commented that this item has been before the conference and has not passed twice. Mr. Guay believes that at some point, the Committee should consider withdrawing it. Mr. Guay has concerns that this item sets up the weights and measures community for challenges from the marketplace in the future. The Committee believes this item is fully developed and ready for voting status.

At the 2019 CWMA Annual Meeting no comments were heard, and the Committee believes this item is fully developed and ready for Voting status

Additional letters, presentations, and data may have been part of the Committee's consideration and were posted on the NCWM website during the time this item was on the Committee's agenda. To the extent possible, comments and positions from such documents have been summarized in the committee's report along with comments heard during the Committee's hearings.

This publication is available free of charge from: https://doi.org/10.6028/NIST.SP.1253

MOS-7 V Section 2.4. Fireplace and Stove Wood.

(This item was Adopted.)

Source:
Retail Marketing Solutions (RMS) (2019)

Purpose:
Provide an extension to the effective date for companies that were not given notice when changes were adopted.

Item Under Consideration:
Amend NIST Handbook 130, Uniform Regulation for the Method of Sale of Commodities as follows:

2.4.3. Quantity. – Fireplace and stove wood shall be advertised, offered for sale, and sold only by measure, using the term "cord" and fractional parts of a cord or the cubic meter, except that:

(a) **Packaged natural wood** –Natural wood offered for sale in packaged form in quantities less than 0.45 m^3 ($^1/_8$ cord or 16 ft^3) shall display the quantity in terms of:

(1) liters, to include fractions of liter, and may also include a declaration of quantity in terms of cubic foot or feet to include fractions of a cubic foot.

(Amended 2010 and 2016)

NOTE: *Implementation for the requirement for use of the liter in (1) package may continue to show the dm^3 level instead of liter (L) for* ~~***three***~~ ***four*** *years after the effective date of this regulation to allow for the use of current packages inventories.* ***Effective date of enforcement shall be January 1, 2021.***

(Added 2016) **(Amended 2019)**

Background/Discussion:
RMS is a major producer for bundled firewood that is provided to major corporations throughout the United States. Until recently RMS was unaware that NCWM adopted changes to the standard of measurement for bundled firewood in 2016. They continue to show the bundles as 0.75 cu. ft. and (21 L). RMS is primary concern is the large supply of bundles currently available in retail stores. RMS is seeking a one-year extension for the effective date of the labeling change for firewood bundles from cu. ft. to liters. RMS believes that all their facilities will comply to this new labeling requirement immediately, however they are greatly concerned with any repercussions that could occur from old product within store inventories.

Justification for this extension lays solely on the unbearable financial strain this would put on RMS and all the customers that they supply. The extreme cost of returning product that has not sold through by the requirement deadline could bankrupt many of the RMS firewood suppliers. This will also put unnecessary financial burden on all of RMS's customers such as Lowes Home Improvement, Tractor Supply, Kroger, Food Lion, Ahold USA, Harris Teeter and many more. RMS was not informed of this change until August 1, 2018. They have purchased millions of labels already for 2018 and started manufacturing and shipping this product months ago. As stated, earlier RMS will comply to this new requirement as soon as possible.

This publication is available free of charge from: https://doi.org/10.6028/NIST.SP.1253

At the 2019 NCWM Interim Meeting no comments were heard on this item. The Committee reviewed the 2018 Fall and all regions reflected support for this item to proceed as a Voting item. The Committee has recommended this item as a Voting item. At the 2019 NCWM Annual Meeting there were no comments heard on this item

Regional Association Comments:
At the WWMA 2018 Annual Meeting, the Committee heard no comments on this item and agreed that this is a reasonable request. The Committee recommends this as a Voting Item.

At the SWMA 2018 Annual Meeting, Ms. Lisa Warfield (NIST OWM) had spoken with the submitter regarding this proposal. This manufacturer has considerable product in the marketplace that does not meet the newer labeling regulations. The manufacturer had contacted the states, in which they have product and they were informed they could be cited for labeling violations. The Committee concurs with extending the enforcement date on this item and recommends this as a Voting.

At the NEWMA 2018 Interim Meeting, Mr. John McGuire (New Jersey), questioned if a two-year delay for implementation is necessary. No other comments being heard, the Committee believes this vote is fully developed and ready for Voting status. At the 2019 NEWMA Annual Meeting, no comments were heard.

At the CWMA 2018 Interim Meeting and 2019 Annual Meeting, no comments were heard, and the Committee believes this item is fully developed and recommends it as a Voting item.

Additional letters, presentations, and data may have been part of the Committee's consideration and were posted on the NCWM website during the time this item was on the Committee's agenda. To the extent possible, comments and positions from such documents have been summarized in the committee's report along with comments heard during the Committee's hearings.

MOS-8 V Section 2.38. Non-Utility Transactions of Electrical Energy (Other than Vehicle Fueling Applications).

(This item was Adopted.)

Source:
NIST OWM (2016)

Purpose:

1. Make the weights and measures community aware of work being done within the U.S. National Work Group on Electric Vehicle Fueling and Submetering to develop proposed requirements for electric watthour meters used in submeter applications in residences and businesses;

2. Encourage participation in this work by interested regulatory officials, manufacturers, and users of electric submeters.

3. Allow an opportunity for the USNWG to provide regular updates to the S&T Committee and the weights and measures community on the progress of this work;

4. Allow the USWNG to vet specific proposals as input is needed.

Item Under Consideration:
Amend NIST Handbook 130, Uniform Regulation for the Method of Sale of Commodities as follows:

2.38. Non-Utility Transactions of Electrical Energy (Other than Vehicle Fueling Applications). - This section applies to non-utility sales of electricity; that is, transactions of electrical energy by other than a utility where the transaction is based in whole or in part on measured quantities of energy delivered.

This publication is available free of charge from: https://doi.org/10.6028/NIST.SP.1253

This section does not apply to:

(a) Electrical energy sold in vehicle fueling applications as defined in Section 2.34. Retail Sales of Electricity Sold as a Vehicle Fuel.

(b) Transactions not subject to weights and measures authority.

2.38.1. Definitions.

2.38.1.1. Utility. – In this regulation, an entity not subject to weights and measures authority as defined by law or regulation, such as a public utility or municipality or electric cooperative.

2.38.1.2. Electricity Metering System. – An electricity metering system comprises of components functioning together to measure and register active energy, apparent energy and/or power factor. An electricity metering system may measure alternating current (AC) or direct current (DC) energy.

2.38.1.3. Demand. – The average rate at which a particular integrated quantity is being supplied to the load. Generally, it is indicated, recorded, or computed as the average obtained over a specified time interval. Demand is expressed in kilowatts (kW), kilovolt-amperes (kVA), kilovars (kvar), or other suitable units.

2.38.1.4. Power Factor (PF). – The ratio of the "active power" to "apparent power", in an AC circuit. It describes the efficient use of available power.

2.38.2. Method of Sale. – All electrical energy offered for sale and sold based on the electrical energy transfer through the electric meter shall be in units specified below.

(a)	**Active Energy:**	**megajoules (MJ) or kilowatt-hours (kWh)**
(b)	**Apparent Energy:**	**kilovolt-ampere hours (kVAh)**
(c)	**Demand:**	**kilowatts (kW) or kilovolt-amperes (kVA)**

In addition to the fees assessed for the quantity of electrical energy sold, where permitted, fees may also be assessed for other services, such as taxes and/or fixed fees.

(a) a "power factor (PF)" and

(b) other services related to the sale of electrical energy, such as taxes and/or fixed fees.

2.38.3. Unit Price. – The electrical energy unit price shall be in terms of price per unit of measure and in U.S. currency.

(Added 2019)

Background/Discussion:
The creation of Developing Items on both the L&R and S&T Committee agendas will provide for a venue to allow the USNWG to update the weights and measures community on continued work to develop test procedures and test equipment standards. This item will provide a forum for reporting on work to develop proposed method of sale requirements for electric watthour meters and a tentative device code for electric watthour meters in residential and business locations and serve as a placeholder for eventual submission of these proposals for consideration by NCWM.

The U.S. National Work Group (USNWG) on Electric Watt Hour Meters (WHE) Meters met (tele/web conference) on September 12-14, 2017 in Sacramento, California to discuss the full development of a November 2014 version of a watthour meter draft code, intended to address legal metrology requirements for the device, its' minimum inspection

This publication is available free of charge from: https://doi.org/10.6028/NIST.SP.1253

and test procedures and test equipment, the appropriate method of sale of electricity through the device and an efficient process for achieving these goals.

At the 2018 NCWM Annual Meeting, Ms. Tina Butcher (WG Technical Advisor) provided an update that the USNWG, Electric Watthour Meter Subgroup has held several in-person meetings since the 2017 NCWM Annual Meeting, including meetings in September 2017, November 2017, and May 2018. All meetings included web-conferencing to allow those not able to attend in person to participate. The Subgroup will meet for a short web-conference on August 29, 2018 and is planning its next in-person meeting for February 2019 in Sacramento, California.

The Subgroup has submitted an item under consideration to NIST Handbook 130's Uniform Regulation for the Method of Sale of Commodities to specify a method of sale for electrical energy sold through these systems and recently finalized a Subgroup ballot on language to be presented for consideration by the Regional W&M Associations and the 2019 NCWM cycle. The subgroup looks forward to comments on the proposed language as it moves through the process. Although, the subgroup understands there may be a need to make some technical and editorial changes as these comments are received, the Subgroup expects the proposal will be ready for vote by the NCWM 2019 Annual Meeting.

At the 2019 NCWM Interim Meeting an industry representative from the National Electrical Manufacturers Association showed support for this item. The Committee deemed this item as fully developed and recommends this item as Voting.

At the 2019 NCWM Annual Meeting, Ms. Lisa Warfield (WG Chairperson) remarked that this item is fully developed. The Subgroup is also working on a proposed code for NIST Handbook 44 to address specifications, tolerances and other requirements for metering (refer to S&T OTH-4). There was support heard for this item.

Regional Association Comments:
At the WWMA 2018 Annual Meeting, Ms. Lisa Warfield (NIST OWM) commented that the workgroup has put forth much effort regarding this proposal and this history appears in Appendix A; she also summarized upcoming efforts of the workgroup. The workgroup believes this proposal is fully developed and ready for vote. Several California Weights and Measures officials support this item as a voting item. Mr. Mahesh Albuquerque (Colorado) voiced support for this item and noted that public utility exemption may need to be revisited in the future. The Committee believes this item is fully developed and should be assigned as a Voting Item.

At the SWMA 2018 Annual Meeting, Ms. Warfield remarked that on June 2018, the USNWG submitted finalized language for the method of sale language to the NCWM L&R Committee. This language currently appears in the L&R Agenda. The Committee believes this item to be fully developed and ready for a Vote.

At the NEWMA 2018 Interim Meeting no comments were heard on this item, and the Committee determined it should move forward as a Voting item as it fully developed. During the 2019 NEWMA Annual Meeting, Lisa Warfield (NIST and WG Committee Chair) commented that she is the Committee Chair for this USNWG. The USNWG completed its task on the Method of Sale and it is fully developed. The USNWG continues to work on the S&T agenda item related to metering. Ms. Warfield asked if any of the states in the NEWMA region are currently using or has interest in the watt hour meters. There were no affirmative responses from NEWMA members. The Committee believes the item is fully developed and ready for voting status, even though the companion on the S&T agenda is still being developed.

At the CWMA 2018 Interim Meeting no comments were heard, and the Committee lacked knowledge of this particular subject, so CWMA did not forward a recommendation. At the 2019 CWMA Annual Meeting the Committee believes this item is fully developed and is ready for a vote.

Additional letters, presentations, and data may have been part of the Committee's consideration and were posted on the NCWM website during the time this item was on the Committee's agenda. To the extent possible, comments and positions from such documents have been summarized in the committee's report along with comments heard during the Committee's hearings.

This publication is available free of charge from: https://doi.org/10.6028/NIST.SP.1253

MOS-9 W Section 2.37. Pet Treats or Chews

(This item was Withdrawn.)

The Committee applied criteria from the NCWM Policy Manual, Section 3.3.2.D. Exceptions to Policy for Submission of Items to the NCWM Committee Agenda and determined this late submission met the criteria involving; court cases and preemption by federal statute or regulation.

Source:
AAFCO

Purpose:
To strike the requirements in the Method of Sale of Commodities, Section 2.37 Pet Treats or Chews at the earliest possible time to avoid disruption of interstate commerce.

Item Under Consideration:
Amend NIST Handbook 130, Pet Treats or Chews as follows:

> **~~2.37. Pet Treats or Chews. Digestible chews, rawhides, bones, biscuits, antlers or similar type products shall be sold by weight.~~**
> **~~(Added 2018)~~**

Background/Discussion:
The Association of American Feed Control Officials (AAFCO) submitted a Form 15 that was not submitted at any of the 2018 Fall Regional Meetings. Provided with input from the NCWM legal counsel which advised it involved both court cases and a claim of federal preemption, the L&R Committee determined that the Form 15 submittal met the requirements of a priority item. Therefore, this proposal will be heard during the L&R Open Hearings at the 2019 NCWM Interim Meeting.

The submittal cited the following federal reference as justification that Section 2.37. Pet Treats or Chews is pre-empted by federal laws:

21 CFR 501.8, SUBPART A

> "Sec. 501.8 Labeling of animal food with number of servings.
>
> (a) The label of any package of a food which bears a representation as to the number of servings contained in such package shall bear in immediate conjunction with such statement, and in the same size type as is used for such statement, a statement of the net quantity (in terms of weight, measure, or numerical count) of each such serving; however, such statement may be expressed in terms that differ from the terms used in the required statement of net quantity of contents (for example, cupsful, tablespoonfuls, etc.) when such differing term is common to cookery and describes a constant quantity. Such statement may not be misleading in any particular. A statement of the number of units in a package is not in itself a statement of the number of servings.
>
> (b) If there exists a voluntary product standard promulgated pursuant to the procedures found in 15 CFR part 10 by the Department of Commerce, quantitatively defining the meaning of the term serving with respect to a particular food, then any label representation as to the number of servings in such packaged food shall correspond with such quantitative definition."

16 CFR 500.6 generally referred to as the Fair Packaging and Labeling Act.

> § 500.6 Net quantity of contents declaration, location.
>
> (a) The label of a consumer commodity shall bear a declaration of the net quantity of contents separately and accurately stated on the principal display panel.

This publication is available free of charge from: https://doi.org/10.6028/NIST.SP.1253

(b) The declaration of net quantity shall appear as a distinct item on the principal display panel, shall be separated (by at least a space equal to the height of the lettering used in the declaration) from other printed label information appearing above or below the declaration and, shall not include any term qualifying a unit of weight or mass, measure, or count such as "jumbo quart," "giant liter," "full gallon," "when packed," "minimum," or words of similar import. The declaration of net quantity shall be separated (by at least a space equal to twice the width of the letter "N" of the style of type used in the net quantity statement) from other printed label information appearing to the left or right of the declaration. However, the "e" mark shall not be considered to be a qualifying word or phrase and may be used as part of the statement of the net quantity of contents where warranted. When used, the "e" mark shall be at least 3 millimeters (approximately $^1/_8$ in) in height. The declaration of net quantity of contents shall be placed on the principal display panel within the bottom 30 percent of the area of the label panel in lines generally parallel to the base on which the package or commodity rests as it is designed to be displayed: *Provided,* that:

(1) On consumer commodities having a principal display panel of 5 square inches (32.2 cm 2) or less, the requirement for placement within the bottom 30 percent of the area of the label panel shall not apply when the declaration of net quantity of contents meets the other requirements of this part, and

(2) The requirements as to separation, location, and type size, specified in this part are waived with respect to variety and combination packages as defined in this part.

16 CFR 500.7 relating to net quantity of contents:

§ 500.7 Net quantity of contents, method of expression.

The net quantity of contents shall be expressed in terms of weight or mass, measure, numerical count, or a combination of numerical count and weight or mass, size, or measure so as to give accurate information regarding the net quantity of contents thereof, and thereby facilitate value comparisons by consumers. The net quantity of contents statement shall be in terms of fluid measure if the commodity is liquid, or in terms of weight or mass if the commodity is solid, semi-solid, or viscous, or a mixture of solid and liquid. If there is a firmly established general consumer usage and trade custom of declaring the contents of a liquid by weight or mass, or a solid, semi-solid, or viscous product by fluid measure, numerical count, and/or size, or (as in the case of lawn and plant care products) by cubic measure, it may be used, when such declaration provides sufficient information to facilitate value comparisons by consumers. The declaration may appear in more than one line of print or type

Prior to the 2019 NCWM Interim Meeting, AAFCO submitted a Form 15 after the NCWM submission deadline for Form 15's. This item was not considered at any of the 2018 Fall Regional Meetings. The L&R Committee reviewed the letter from NCWM legal counsel and the fact that it involves both court cases and a claim of federal preemption, the L&R Committee determined that the Form 15 submittal met the criteria as priority items. Therefore, this proposal will be heard during L&R open hearings at the 2019 NCWM Interim Meeting.

At the 2019 NCWM Interim Meeting Ms. Sue Hayes (AAFCO) gave a presentation and requested removal of NIST Handbook 130, Section 2.37. Pet Treats or Chews. Ms. Lorri Chavez (Central Garden & Pet/PFI) discussed the role of their institute and looks for a viable solution. Ms. Rachelle Miller (Wisconsin) spoke about the value comparisons of items sold by net weight, count, or size. Ms. Miller also pointed out that Ms. Hayes presentation discussed the nutritional labeling which does not apply to the net contents of the package. Mr. Chris Guay (P&G) addressed the time frame for industry to comply. Due to the support of another proposal pertaining to this same item (MOS-10) the Committee has recommended this item be Withdrawn.

Additional letters, presentations, and data may have been part of the Committee's consideration and were posted on the NCWM website during the time this item was on the Committee's agenda. To the extent possible, comments and positions from such documents have been summarized in the committee's report along with comments heard during the Committee's hearings.

This publication is available free of charge from: https://doi.org/10.6028/NIST.SP.1253

MOS-10 V Section 2.37. Pet Treats or Chews

(This item was Withdrawn.)

The Committee applied criteria from the NCWM Policy Manual, Section 3.3.2.D. Exceptions to Policy for Submission of Items to the NCWM Committee Agenda and determined this late submission met the criteria involving; court cases and preemption by federal statute or regulation.

If this item is not adopted Members will proceed to Vote on MOS-11.

Source:
Pet Food Institute

Purpose:
To revise NIST Handbook 130, Method of Sale of Commodities, Section 2.37. Pet Treats or Chews and seek to find a practicable solution that is permissible in the current animal food regulatory framework.

Item Under Consideration:
Amend NIST Handbook 130 Pet Treats or Chews as follows:

> **2.37. Pet Treats or Chews** – Digestible chews, rawhides, bones, biscuits, antlers or similar type products shall be sold by weight **except when a package can only be properly measured in terms of count only, and the individual unit is visible to the purchaser, such packages may be sold by count**.
>
> **(Effective July 18, 2019. Enforceable January 1, 2021)**
>
> **(Amended 20XX)**

Background/Discussion:
Prior to the 2019 NCWM Interim Meeting, the Pet Food Institute (PFI) submitted a Form 15 after the NCWM submission deadline. This item was not considered at any of the 2018 Fall Regional Meetings. The L&R Committee reviewed the letter from NCWM legal counsel and the fact that it involves both court cases and a claim of federal preemption, the L&R Committee determined that the Form 15 submittal met the criteria as priority items. Therefore, this proposal will be heard during L&R Open Hearings at the 2019 NCWM Interim Meeting.

Certain sections of the Code of Federal Regulations are in conflict as cited below (emphasis added - underline).

In 16 CFR § 500.7 Net quantity of contents, method of expression.

> The net quantity of contents shall be expressed in terms of weight or mass, measure, numerical count, or a combination of numerical count and weight or mass, size, or measure so as to give accurate information regarding the net quantity of contents thereof, and thereby facilitate value comparisons by consumers. The net quantity of contents statement shall be in terms of fluid measure if the commodity is liquid, or in terms of weight or mass if the commodity is solid, semi-solid, or viscous, or a mixture of solid and liquid. If there is a firmly established general consumer usage and trade custom of declaring the contents of a liquid by weight or mass, or a solid, semi-solid, or viscous product by fluid measure, numerical count, and/or size, or (as in the case of lawn and plant care products) by cubic measure, it may be used, when such declaration provides sufficient information to facilitate value comparisons by consumers. The declaration may appear in more than one line of print or type.

And

21 CFR § 501.8 Labeling of animal food with number of servings.

> (a) The label of any package of a food which bears a representation as to the number of servings contained in such package shall bear in immediate conjunction with such statement, and in the same size type as is used for such statement, a statement of the net quantity (in terms of weight, measure, or numerical count) of each such serving; however, such statement may be expressed in terms that differ from the terms used in the required

statement of net quantity of contents (for example, cupfuls, tablespoonfuls, etc.) when such differing term is common to cookery and describes a constant quantity. Such statement may not be misleading in any particular. A statement of the number of units in a package is not in itself a statement of the number of servings.

Prior to the 2019 NCWM Interim Meeting, the Pet Food Institute (PFI) submitted a Form 15 after the NCWM submission deadline for Form 15s. This item was not considered at any of the 2018 Fall Regional Meetings. The L&R Committee reviewed the letter from NCWM legal counsel and the fact that it involves both court cases and a claim of federal preemption, the L&R Committee determined that the Form 15 submittal met the criteria as priority items. Therefore, this proposal will be heard during L&R open hearings at the 2019 NCWM Interim Meeting.

At the 2019 NCWM Interim Meeting numerous comments were heard from regulators and associate members expressing support for this item which will allow a package to be sold by count if the unit is visible to the purchaser. A representative from the state of Wisconsin, showed support for this item. After reviewing the comments, the Committee also modified this item to include an effective date of July 18, 2019 and an enforcement date of January 1, 2021. With these changes the Committee recommends this item be a Voting item. If this item (MOS-10) does not get adopted, then members will vote on MOS-11. MOS-11, is an Item developed by the L&R Committee for Section 2.37. Pet Treats or Chews which adds an effective date of July 18, 2019 and an enforcement date of January 1, 2021 to existing regulation within NIST Handbook 130.

At the 2019 NCWM Annual Meeting there were many regulators that did not support this item. Many members believe that this does not provide consumers a way to do a value comparison. Mr. John McGuire (New Jersey) respectfully requested that AAFCO retract the letter that they submitted to NCWM due to the incorrect statement regarding his state. Mr. Jason Schmidt (AAFCO) opposed MOS-10 and MOS-11 as written since the law requires, they be sold by count. He said there is a conflict between state and feed control officials. He also remarked that term "pet" is in the header but not in the definition itself. He also expressed concern with the state by state regulatory authority. Mr. Schmidt recommends that a task group be formed consisting of AAFCO and NCWM to agree on language. Mr. Patrick Tovey (Pet Food Institute) remarked that he represents 23 companies and only two of these have pet treats. Mr. Tovey requested that Committee consider extending the enforcement date. Mr. Timothy Elliott (Washington) remarked that food safety representatives' package differently versus the requirements in the handbook. The current handbook language would conflict with Washington food safety laws. Ms. Cindy Lease (Wisconsin) provided members with a presentation of products found in the marketplace that are similar but being sold by either net weight or count only. Based upon comments received, the Committee withdrew this Item and moved forward a vote on MOS-11.

Regional Associations Comments:
At the CWMA 2019 Annual Meeting, Ms. Lisa Warfield (NIST Technical Advisor) spoke in regard to MOS-10 and MOS-11. Ms. Warfield indicated that the pet food industry had concerns with the adopted item (refer to MOS-11). The manufacturers indicated they could not quickly change their labeling due to current stock of labels and they could not sell only by weight due to the irregular size and shape of their products. Ms. Warfield remarked that using the term "properly measured" is too vague. She asks that the Committee carefully review the terminology and if it is changed the item may need to be deescalated for it will require due process. Mr. Doug Musick (Kansas) commented that he agrees there is some logic when products are visible and a consumer can make a comparison judgment, but what about a consumer who cannot see the full contents of the package? Ms. Rachelle Miller (Wisconsin) commented that this proposal is too ambiguous and would prefer MOS-11. Based on the amount of ambiguity of terms resulting in potential confusion, the Committee recommends this item be Withdrawn.

During the 2019 NEWMA Annual Meeting, Lisa Warfield (NIST Technical Advisor) commented on items MOS-10 and MOS-11. Ms. Warfield commented that AAFCO and Pet Food Institute are supporting the sale of items by count, as well as net weight. She stated that the supporting CFR submitted by the Pet Food Institute addresses nutritional labeling for animal food and does not pertain to the net weight statement that is to appear on the principal display panel. FDA had provided NIST with CFR 21 501.105 for labeling of net quantity. It is was also discussed regarding that these products are variable in size and thickness and are too variable to be sold by count. The CFR does state that contents by weight, measure or count, or combination does not facilitate value comparisons by consumers it introduces confusion. MOS-10 is not technically sound as written and should be reviewed and changed by the Committee if it is considered.

This publication is available free of charge from: https://doi.org/10.6028/NIST.SP.1253

This publication is available free of charge from: https://doi.org/10.6028/NIST.SP.1253

Mr. John McGuire (New Jersey) believes that the AAFCO letter (MOS-9) posted on the NCWM website should be removed due misinformation stated within it. Based on the comments heard, AAFCO and Pet Food Institute citing the wrong CFR and the ambiguity of the phrase "properly measured", the Committee believes the item should be Withdrawn.

Additional letters, presentations, and data may have been part of the Committee's consideration and were posted on the NCWM website during the time this item was on the Committee's agenda. To the extent possible, comments and positions from such documents have been summarized in the committee's report along with comments heard during the Committee's hearings.

MOS-11 V Section 2.37. Pet Treats or Chews

This Item will only proceed to a Vote if MOS-10 does not garner support for adoption.

Source:
NCWM L&R Committee

Purpose:
Modify NIST Handbook 130, Section 2.37. Pet Treats or Chews to create an effective and enforcement date for this regulation.

Item Under Consideration:
Amend NIST Handbook 130 Pet Treats or Chews as follows:

> **2.37. Pet Treats or Chews** – Digestible chews, rawhides, bones, biscuits, antlers or similar type products shall be sold by weight.
>
> **(Effective July 18, 2019. Enforceable January 1, 2022)**
>
> **(Amended 2019)**

Background/Discussion:
At the July 2018 NCWM Meeting a method of sale for pet treats and chews was adopted and placed into NIST Handbook 130, Method of Sale of Commodities, Section 2.37. which codified existing regulations that these pet treats and chews shall be sold by weight. At the 2019 NCWM Interim Meeting comments were heard in support of priority Item MOS-10, Section 2.37. Pet Treats or Chews that allowed for individual items to be sold by count and in which the Committee added an effective and enforcement date. Stakeholders expressed concern that there was not enough notice given and they are struggling to become compliant with the recently adopted regulation. The Committee does believe that labeling should facilitate value comparison by consumer. The Committee decided that if MOS-10 fails to garner support to be adopted, the Committee created a new Item under Consideration which will add an effective enforcement date of January 1, 2022, effective immediately (July 18, 2019) to the language as it appears in NIST Handbook 130, MOS Section 2.37. Pet Treats or Chews.

At the 2019 NCWM Annual Meeting many states supported this item. Ms. Warfield recommended adding the word "packaged" to the language. Many regulators supported this modification. There was concern expressed at the regional level pertaining to items sold in bulk. Ms. Warfield does support the extended date for enforcement which will allow manufacturers to use up existing labeling. Mr. Doug Musick (Kansas) remarked that consumers are purchasing these items on-line and they are only viewing a picture and descriptor. For these reasons Mr. Musick supports these items being sold by weight. The Committee moved forward language with the word "Packaged" at the start of the sentence and an enforcement date of January 1, 2022. During voting session there was a motion made from the floor to strike the word "Packaged". The motion was accepted and the word "packaged" was stricken from the final proposal.

This publication is available free of charge from: https://doi.org/10.6028/NIST.SP.1253

Regional Association Comments:
At the 2019 CWMA Annual Meeting the Committee believes this item is fully developed and ready for Voting status.

At the 2019 NEWMA Annual Meeting, Ms. Lisa Warfield (NIST Technical Advisor) commented that NEWMA previously recommended adoption of this language with a delayed effective date. Mr. Mike Sikula (New York) commented that if the language was modified to add the term "pre-packaged" he would support it. Mr. John McGuire (New Jersey) supports the item as written due to pet treats already need to be sold by net weight if they are pre-packaged in New Jersey. Mr. Jim McInerney (Connecticut) also would support if the language referenced "pre-packaged items". Mr. Ethan Bogren (Westchester County, New York) commented that industry stated this would be problematic for them due to overpackaging for certain commodities. The Committee supports this item as Voting with the following amended language:

2.37. Pet Treats or Chews – **Pre-packaged** digestible chews, rawhides, bones, biscuits, antlers or similar type products shall be sold by weight.
(Effective July 18, 2019. Enforceable January 1, 2021)
(Amended 20XX)

Additional letters, presentations, and data may have been part of the Committee's consideration and were posted on the NCWM website during the time this item was on the Committee's agenda. To the extent possible, comments and positions from such documents have been summarized in the committee's report along with comments heard during the Committee's hearings.

ODR – UNIFORM OPEN DATING REGULATION

ODR-1 W Section 1. Purpose, Scope and Application, Prohibited and Acceptable Terms, Section 2. Definitions, Section 3. Sale of Perishable Food and Date Determination, Section 4. Sale of Semi Perishable and Long Shelf Life Food with "BEST If Used By" Opening Date, Section 5. Placement of the "USE By" or "BEST If Used by Date, Section 6. Factors for the Date Determination of "USE By" or BEST If Used By" Dates, Section 7. Records., Section 8. Exemptions, Section 9. Preemption of Local, County, and Municipal Ordinance and Section 10. Effective Date

(This item was Withdrawn.)

Source:
NIST OWM (2019)

Purpose:
Improve the accuracy and usability of open dating information resulting in financial savings for consumers and industry alike.

Item Under Consideration:
Amend NIST Handbook 130 Uniform Open Dating Regulation as follows:

Section 1. Purpose, Scope and Application**, Prohibited and Acceptable Terms**

1.1. Purpose. – The purpose of this regulation is to prescribe ~~**mandatory**~~ ~~**uniform**~~ **open** date labeling **that shall be used whenever a person provides open** ~~**of prepackaged, perishable foods and to prescribe optional uniform date labeling that must be used whenever a packager elects to use**~~ date labeling on ~~**prepackaged**~~ **packaged** foods**.** ~~**that are not perishable.**~~ Open dating is intended for use and understanding by both **packers,** distributors**, retailers** and consumers when judging food qualities. **Use of the terms "USE By" and "BEST if Used By" prescribed in this**

This publication is available free of charge from: https://doi.org/10.6028/NIST.SP.1253

regulation, and no others, will reduce consumer confusion over food date labels and may aid in reducing food waste.

~~***NOTE 1: Alternatively, this regulation may be adopted to require uniformity of open dating of perishable foods whenever a packager voluntarily elects to use date labeling. In such instances Sections 1.1. Purpose and 3.1. "Sell By" Date are reworded in the following manner:***~~

> ~~***1.1. Purpose. The purpose of this regulation is to prescribe uniform date labeling that must be used whenever a packager elects to use date labeling on a prepackaged food. Open date labeling is intended for use and understanding by both distributors and consumers when judging food qualities.***~~
>
> ~~***3.1. "Sell By" Date. If a retail food establishment elects to sell or offer for sale a prepackaged perishable food identified with a "sell by" date, the "sell by" date used must be as prescribed by this regulation***~~

1.2. Scope and Application. – This regulation prescribes the manner of date labeling, the method of determining the appropriate date, required records, responsible persons, and the foods subject to this regulation. This regulation provides for the permissible sale **or disposal** of a regulated food after the expiration of the date on the label **and should not be applied in any way to restrict food recovery efforts**. This regulation does not apply to any food that is not ~~**prepackaged**~~ **packaged** or **which** is exempted by Section 8.

1.3. Prohibited and Acceptable Terms. – After the effective date of this regulation the terms "Sell-By Date," "Pull Date," and "Display Until Date" or words of similar meaning used for stock control shall appear only in a closed-date system that is invisible to consumers. However, the use of open dating in conjunction with terms such as "Use or Freeze By" or "Best If Used By" or words of similar meaning intended to aid consumers in handling the product safely after purchase is permitted. However, manufacturers and retailers should utilize, at most, one date label per food product.

Section 2. Definitions

2.1. "~~Sell By~~ BEST If Used By" Date – A ~~**recommended last**~~ date **prior to deterioration of qualities described in Section 2.7. Semi Perishable Food and Section 2.2. Long Shelf Life Food. It describes product quality, where, after expiration of the date the product may not taste or perform as expected but it is safe to use or consume.** ~~**of sale that permits a subsequent period before deterioration of qualities described in 2.2. Perishable Food, 2.3. Semi Perishable Food, and 2.4. Long Shelf Life Food**~~.

2.2. Long Shelf Life Food. – Any food for which a significant risk of spoilage, loss of value, or loss of palatability does not occur sooner than 6 months after the date of packaging, including foods, preserved by freezing, dehydrating, or being placed in a heretically sealed container.

2.~~5~~3. ~~Prepackaged~~ Packaged. – Food packaged prior to being displayed**, ~~or~~** offered**, or exposed** for ~~**retail**~~ sale.

2.~~2~~4. Perishable Food. – Any food having a significant risk of spoilage, loss of value, or loss of palatability within 60 days of the date of packaging.

~~**2.4. Long Shelf Life Food – Any food for which a significant risk of spoilage, loss of value, or loss of palatability does not occur sooner than 6 months after the date of packaging, including foods preserved by freezing, dehydrating, or being placed in a hermetically sealed container.**~~

2.~~7~~5. Person. – An individual, partnership, association, or corporation.

2.6. Retail Sales. – Retail sale includes sales such as, but not limited to, those made in any retail store including club and membership stores, through online sales, catalog sales, telephone and door-to-door solicitations, and home-food service plans.

2.~~3~~7. Semi Perishable Food – Any food for which a significant risk of spoilage, loss of value, or loss of palatability occurs only after a minimum of 60 days, but within 6 months, after ~~of~~ the date of packaging.

2.~~6~~8. "~~Best If~~ USE By" Date – A date **that informs the consumer that the product should be consumed by the date displayed on the label and after the expiration of that date, the food should not be used or consumed and should be properly disposed of.** ~~**prior to deterioration of qualities described in 2.3. Semi Perishable Food and 2.4. Long Shelf Life Food.**~~

Section 3. Sale of Perishable Food and Date Determination

3.1. "~~Sell~~ USE By" Date. ~~[*NOTE 1*, page 159]~~ – A ~~**retail food establishment**~~ **person** shall not sell or offer for sale a ~~**prepackaged**~~ **packaged** perishable food unless it is identified with a "~~**sell by**~~ **USE By**" date as prescribed by this regulation.

3.2. Manner of Expressing Date. – The "Use By" date as required by Section 3.1. "USE By Date" shall be placed upon or attached to each container or package and be limited to the terms "USE By" followed by or immediately over the date designated by the month and year, unless a prominent notice is on the label describing the date as a "USE By" date and indicating the location of the date. The word "USE" and the "U" in "Used" and the letter "B" in "By" must be shown in uppercase letters. The date shall be designated by the first 3 letters of the month followed by a numeral indicating the year (which may appear in either two or four digits, for example as "2021" or "21"). The use of the day of the month is permissible provided that the day of the month is placed prior to the month; for example, "30 Jun 21" or "30 JUNE 2021).

3.3. Determination of "USE By" Date.

3.3.1. Reasonable Period for Consumption. – A manufacturer, processor, packer, re-packer, retailer, or other person who prepackages perishable food, shall determine a date that allows a reasonable period after sale of consumption of the food without physical spoilage, loss of value, or loss of palatability. A reasonable period for consumption shall consist of at least one third of the approximate total shelf life of the perishable food.

3.3.2. Responsibility for "USE By" Date. – A retailer who purchases packaged perishable food may upon written agreement with the person who packages such food each package of such food determine, identify, and be responsible for the "USE By" date placed on or attached to each package of such food.

3.4. Sale after Expiration of the "USE By" Date.

(a) A person shall not, in a retail sale, offer or expose for sale or sell a packaged perishable food after the expiration of "USE By" Date on the label.

(b) A person may sell or donate food after the expiration of the "Use By" date but must notify the receiving party in writing that the product "USE By" date is expired, and it is the receiving party's responsibility to evaluate the quality and wholesomeness of the product prior to use or consumption.

~~**3.2. Sale After Expiration of "Sell By" Date.**~~

~~**3.2.1. Advertisement. – Perishable food shall not be offered for sale after the "sell by" date unless it is wholesome and advertised in a conspicuous manner as being offered for sale after the recommended last date of sale. The placement of a sign, sticker, or tag is acceptable for such advertising if it is easily readable and clearly identifies the perishable food as having passed the recommended last date of sale.**~~

~~**3.2.2. Responsibility for Advertisement. – The retailer or final seller is responsible for the advertisement, described in Section 3.2.1. Advertisement, of a perishable food offered for sale after the recommended last date of sale.**~~

~~**3.3. Determination of "Sell By" Date.**~~

This publication is available free of charge from: https://doi.org/10.6028/NIST.SP.1253

This publication is available free of charge from: https://doi.org/10.6028/NIST.SP.1253

~~**3.3.1. Reasonable Period for Consumption. – A manufacturer, processor, packer, re-packer, retailer, or other person who prepackages perishable food, shall determine a date that allows a reasonable period after sale for consumption of the food without physical spoilage, loss of value, or loss of palatability. A reasonable period for consumption shall consist of at least one third of the approximate total shelf life of the perishable food.**~~

~~**3.3.2. Responsibility for "Sell By" Date. – A retailer who purchases prepackaged perishable food may upon written agreement with the person prepackaging such food determine, identify, and be responsible for the "sell by" date placed on or attached to each package of such food.**~~

~~**3.4. Manner of Expressing Date.**~~

~~**3.4.1. Month and Day, or Day of Week. – A person described in Section 3.3.1. Reasonable Period for Consumption or 3.3.2. Responsibility for "Sell By" Date shall place or attach to each package of perishable food a date by month and day. However, bakery products with a shelf life of not more than seven days may be dated with the day of the week representing the last recommended day of sale.**~~

~~**3.4.2. The term "Sell By." – The "sell by" date shall be displayed with the term "sell by" or words of similar import immediately preceding or immediately over the designated date unless a prominent notice is on the label describing the date as a "sell by" date and indicating the location of the date.**~~

~~**3.4.3. Abbreviation of Weekday. – If the day of the week is solely designated as provided in Section 3.4.1. Month and Day, or Day of Week the name of the day may be abbreviated by the use of either the first two or first three letters of the name of the day.**~~

~~**3.4.4. Expression of Month and Day – Except as provided for in Section 3.4.1. Month and Day, or Day of Week the date shall be designated by:**~~

~~**(a) the first three letters of the month, preceded or followed by a numeral indicating the calendar day; or**~~

~~**(b) the month represented numerically followed by a numeral designation of the calendar day.**~~

~~**The month and day designation shall be separated by a period, slash, dash, or spacing. When a numeral designation of the first nine days of the month is used, the number shall include a zero as the first digit; for example, 01 or 03.**~~

~~**(Amended 1987)**~~

~~**3.4.5. Expression of the Year. – The "sell by" date may include the year following the day if such year is expressed as a two or four-digit number separated as described in Section 3.4.4. Expression of Month and Day.**~~

Section 4. Sale of Semi Perishable and Long Shelf Life Food <u>with "BEST If Used By" Opening Date.</u>

4.1. "Best If Used By" Date – A ~~**manufacturer, processor, packer, re-packer, or other**~~ person who ~~**prepackages**~~ **<u>packages</u>** semi perishable or long shelf life food may place upon or attach to the package an open date ~~**providing**~~ **<u>provided</u>** it is designated by ~~**the**~~ **<u>use of a</u>** "BEST If Used By" date.

~~**4.2. Sale After Expiration of "Best If Used By" Date. – A retail food establishment may sell or offer for sale food beyond the designated "best if used by" date provided the food is wholesome and the sensory physical quality standards for that food have not significantly diminished.**~~

4.~~3~~<u>2</u>. Manner of Expressing Date. – The "Best If Used By" date as required by Section 4.1. "Best If Used By" Date shall be placed upon or attached to each container or package and be limited to the terms "BEST If Used By" ~~**or words of similar import**~~ followed by or immediately over the date designated by the month and year unless a prominent

notice is on the label describing the date as a "Best If Used By" date and indicating the location of the date. **The word "BEST" and the letter "B" in "By" must be shown in uppercase letters.** The date shall be designated by the first three letters of the month followed by a numeral indicating the year **(which may appear in either two or four digits, for example as "2021" or "21")**. The use of the day of the month is permissible provided that the day of the month is placed prior to the month; for example, "30 Jun ~~8~~**21"**~~,~~ **or "30 JUNE 2021".**

4.~~2~~3. Sale After Expiration of "BEST If Used By" Date. – A ~~**retail food establishment**~~ **person** may ~~**sell or**~~ offer**, expose** for sale**, sell, or donate** food **that bears an expired** ~~**beyond the designated "best if used by"**~~ date **(i.e., beyond the designated "BEST If Used By" date)** provided the food is wholesome and the sensory physical quality standards for that food have not significantly diminished.

Section 5. Placement of the "USE By" or "BEST If Used by Date

The date, whether "~~**sell**~~ **USE B**y" or "**B**est **I**f **U**sed **B**y" shall be printed, stamped, embossed, perforated, or otherwise shown on the package, label on the package, **label on the package** or tag attached to the package in a manner that is easily readable and separate from other information, graphics, or lettering so as to be clearly visible to a prospective purchaser. The date shall not be superimposed on other required information or obscured by other information, graphics, or pricing. Regardless of the type size used, the date shall be easily readable. These requirements do not preclude a supplemental notice elsewhere on a package describing and/or indicating the location of the date.

Section 6. Factors for the ~~Date~~ Determination of "USE By" or BEST If Used By" Dates

~~**A**~~ **The** person who~~**, as provided for in this regulation,**~~ places either the "~~**sell by**~~ **USE By**" ~~**date**~~ or "**B**est **I**f **U**sed **B**y" date on a package **label** shall determine the date by taking into consideration the food quality, characteristics, formulation, processing impact, packaging or container and other protective wrapping or coating, customary transportation, and storage and display conditions. For purposes of calculating this date, home storage conditions shall be ~~**considered to be similar to**~~ **like** those in the usual retail store except that the date for refrigerated food may be calculated by using a home storage temperature standard of ~~**40 °F (4.4 ºC)**~~ **4.4 °C (40 °F).**

Section 7. Records

~~**A**~~ **The** person ~~**who is**~~ responsible for establishing the date for perishable, semi perishable, and long shelf life food shall keep a record of the method**s** used to determine the date**s**. A record revision is necessary whenever a factor affecting date determination is altered. Such record shall be retained for not less than six months after the most recent "~~**sell by**~~ **Use By**" or "**B**est **I**f **U**sed **B**y" date and shall be available during normal business hours for examination upon request by (**the title of the director or the responsible regulatory agency is added to the final regulation).** ~~**(agency name).**~~

Section 8. Exemptions

8.1. This regulation does not apply to perishable fruits or vegetables in a container permitting sensory examination.

8.2. This regulation does not apply to prepackaged perishable foods open dated according to requirements of federal law or regulation.

Note: ***For example, under the Food and Drug Administration (FDA) regulations (refer to 21 CFR 107.20(c)) package of infant formula must bear a "Use by date," indicating the month and year. The manufacturer, packer, or distributor determines the "use by" date based on tests or other information showing that infant formula, until that date, under the conditions of handling, storage, preparation, and use prescribed by the label direction, will, when consumed, contain not less than the quantity of each nutrient, as set forth on the label, and otherwise be of an acceptable quality but the FDA regulation does not specify the uppercase lettering for the "USE by" are required in Section 3.2. Manner of Expressing Date.***

This publication is available free of charge from: https://doi.org/10.6028/NIST.SP.1253

This publication is available free of charge from: https://doi.org/10.6028/NIST.SP.1253

Section 9. Preemption of Local, County, and Municipal Ordinance

A municipality or county shall not adopt or impose standards or requirements other than those provided for in this regulation.

Section 10. Effective Date

This regulation shall become effective **and enforceable** on ~~and after~~ **January 1, 2024.**

Note: To encourage a rapid transition to the uniform open dating and other requirements in this regulation any person may provide open dating on packages in compliance with this regulation and those packages may be offered or exposed for sale or sold in retail sales upon adoption of this regulation by the National Conference on Weights and Measures (NCWM).

Background/Discussion:
This proposal revises the Uniform Open Dating Regulation to replace the term "Sell By" with "Use By" and to provide requirements for standardized date formats. This will improve the accuracy and usability of open dating information and result in a financial savings for consumers and industry alike.

Currently, the States of Arkansas, Connecticut, Nevada, Oklahoma, and West Virginia automatically adopt the ODR, so adoption of the proposed changes will impact the enforcement programs in these States.

This proposal is to revise the Uniform Open Dating Regulation (ODR) to eliminate the requirement for the "Sell By" date because research has revealed that use of this term has led to consumer confusion and contributes to food waste. The proposed revisions replace "Sell By" with "Use By" which provides consumers with clearer guidance to avoid spoilage or loss of value for perishable or semi perishables foods. Revised requirements are also included to standardize date formats. The proposed revisions will eliminate legal and technical barriers to recent efforts by the Grocery Manufacturers of America (GMA) and the Food Marketing Institute (FMI) to align the dating methods used by manufacturers and retailers to reduce consumer confusion (refer to supporting document attachment 1). The proposed revisions will require manufacturers to utilize only one open dating code on a package to reduce the possibility for conflict by requiring stock control dating (e.g., sell by date, pull date) to be provided in a "closed dating" system readable only by stock control personnel of manufacturers, distributers or retailers and similar parties. Provisions describing requirements for the sell or disposal of expired products are also included. The intent of the revised regulation is to provide flexibility in the prescriptive wording of the regulation by allowing variations from the prescribed text if the terms "USE By" or "BEST if Used By" are used in conjunction with the prescribed words. This allows manufacturers to add wording that clarifies or increases the usability of the open date information on packages, so it is not rejected by an official simply because it is not identical to that in the regulation (e.g., "This Product Will Taste BEST if Used By the Date on the Bottom of the Package" or "BEST when Used By.")

Approach to Adoption

The OWM sought the advice of both GMA and FMI and they recommended (refer to supporting document – Attachment 5) that enforcement of the revised ODR requirements be delayed for three-years from the date of adoption and that an additional 1-year exemption be incorporated for packages in distribution or in inventory on the enforcement date of the revised requirements which may not comply with the revised requirements. The OWM believes this enforcement delay is reasonable based on the information that industry provided. In addition, much of the open labeling currently being used by most packers do not meet the proposed open dating requirements. Implementing the revised open dating requirements and uniform date formats will be costly and require time for equipment procurement, label revisions and other changes to be implemented, such as the revised requirement for closed dating for inventory control uses.

The information regarding the current state of open date labeling was confirmed by a local marketplace survey OWM recently carried out which revealed that many packages have open dating information which does not comply with the requirements in the current ODR. The OWM believes the following approach will improve the accuracy and usability of open dating information and that it is the least costly way to implement the proposed requirements which will certainly result in money savings for consumers and industry alike.

This publication is available free of charge from: https://doi.org/10.6028/NIST.SP.1253

OWM is recommending the following approach to adoption of the proposed ODR for consideration by the NCWM Laws and Regulations Committee (the Committee).

Repeal the current ODR and adopt the proposed ODR requirements with an effective date for enforcement of January 1, 2024.

This should include a provision indicating that the requirements may be used by industry for purposes of voluntarily complying with the "item under consideration" ODR effective immediately upon adoption by the NCWM. This approach would place a clear standard for open date labeling in NIST Handbook 130 and this would encourage and permit industry to voluntarily comply with the requirements. This would allow packers to offer or expose for sale or sell packages in retail sales with the assurance that they will meet upcoming requirements that will be enforceable in 2024. This approach should allow adequate time for all affected packers to implement the revised open date labeling requirements and implement consistent date formats. This will make it easier for consumers to understand date information and allow packages in distribution or storage with open date labeling which does not meet the new requirements to move through the marketplace. Even though this approach suspends enforcement action under the ODR until 2024 it will allow packers to make the transition as part of their routine business and avoid situations where enforcement actions may be taken to enforce obsolete and inefficient open dating requirements.

By not setting an enforcement deadline of January 1, 2023 and having a separate one-year exemption for packages in the distribution system or in inventory this approach avoids situations where officials or retailers would need to determine if packages found in retail stores with potentially non-compliant labeling or were in distribution or in storage on the 2023 effective date or not.

The OWM believes this approach will jump-start the conversion over to the new open dating requirements in the least disruptive way. The OWM believes that in the interim period consumers would be better served through information and educational efforts about how to use and understand open date labeling in the media and through other venues. NCWM adoption of this unique approach should not prevent the NCWM and States from working with industry trade groups to educate packers and consumers about the new requirements and the benefits of how to use the new open dating regulations. There are many reasons to justify the NCWM taking this approach:

1. Studies which show that the current open dating regulation requirements are obsolete and that they confuse consumers and result food waste and not continue to endorse the current ODR that includes legal requirements that continue to follow misguided practices. (refer to supporting documents)

2. To prevent enforcement of requirements that are obsolete, and which may cause consumer confusion and food waste the NCWM should encourage the states which automatically adopt the ODR to suspend enforcement of the current open dating regulation. Instead, all states should focus outreach efforts on educating consumers and industry about the benefits of the proposed "new' open dating regulation and requirements.

3. This approach is the simplest and least costly way to bring about these much-needed revisions to the open dating requirements in the ODR which can serve as a model for revising open dating requirements that some states have in other product regulations

4. Since in early 2017 many manufacturers have joined an industry wide effort to switch over to use of the proposed requirements in their open date labeling as part of an industry wide move to the new standard. It is in the best interest of consumers and industry alike to encourage the rapid transition. While industry has set a voluntary 2020 deadline for use of the new open dating the attached proposal includes requirements on closed dating for inventory and stock control purposes and uniform date formats which are not covered in the industry program so the delayed enforcement date is necessary and justified.

5. Recognizing that setting any label conversion deadline may result in packages in the distribution system or those stored in warehouses to be in violation of the "new" ODR its effective date includes one additional year beyond the three-year implementation delay requested by GMA and FMI. This 4-year enforcement delay provides a hard deadline that serves two purposes: (1) allows industry to sell thru packages that were in the

distribution system or warehouse inventories which may not be in compliance with the new ODR requirements and, (2) avoids expending enforcement resources that may be devoted in trying to determine if packages are exempt from the requirements of the "new" ODR or not.

The Uniform Open Dating Regulation (UODR) (which has not been updated in more than 32 years) should be revised because some of its requirements and terms it mandates have been shown to contribute to consumer confusion over food dates and has more than likely contributed to food waste since it was adopted. Refer to the following supporting documents which were provided to the committee and posted on the NCWM website:

- Attachment 1: FMI & - GMA "Grocery Industry Launches New Initiative to Reduce Consumer Confusion on Product Date Labels"
- Attachment 2: "Open Date Labeling Revisions for Food Appear To Be on the Horizon," September 27th, 2017, Contributor: Michael J. O'Flaherty.

According to a February 15, 2017, press release from GMA/FMI "about 44% of food waste sent to landfills comes from consumers, and statistics show that addressing consumer confusion around product date labeling could reduce total national food wasted by 8 %." The most notable justifications for bringing about a much needed change in open date labeling and identifying the need for the NCWM to update and promote widespread adoption of an up-date and more effective UODR was published in a 2013 definitive study from the Natural Resources Defense Council and Harvard University case for revising the UODR is well stated in "The Dating Game – How Confusing Food Date Labels Lead to Food Waste in America" Harvard & Natural Resource Defense Council, September 2013 (refer to supporting document- Attachment 3 which was provided to the committee and posted to the NCWM website). This provides detailed descriptions of the many different defects in the current regulation and suggestions for dealing with some of the factors that contribute to consumer confusion.

In addition, the following supporting documents have been provided to the committee and are posted to the NCWM website.

- Attachment 4: Standardizing food date labeling has become an international priority "Champions 12.3 "Call to Action to Standardize Food Date Labels Worldwide by 2020" September 2017.
- Attachment 5: "Food Marketing Institute Letter Supporting Proposed Changes to Uniform Open Dating Regulation."

Some packagers may oppose the requirement for the format of the date or the provisions for using a closed dating system for stock rotation.

At the 2019 NCWM Interim Meeting comments were taken on ODR-1 and an alternate proposal in Block 5 (WAM-1 & ODR-2) concurrently. A majority of regulators supported Item Block 5. A Missouri regulator and a representative from Food Marketing Institute (FMI) acknowledged the merit of this item but recognized it needed further development. The majority of commenters believed regulatory responsibilities contained in ODR-1 fall outside of purview of weights and measures officials. Comments indicated that food safety officials would hold the duties of enforcement regarding this item. With consideration to the comments heard the Committee recommends this entire regulation be removed from NIST Handbook 130. The Committee does not want action taken on the editorial changes under the item for consideration. For clarity the Committee did make a change to the current definition for semi-perishable and Section 3.3.2., which contained an incomplete sentence. The Committee is Withdrawing this this item under consideration.

Regional Association Comments:
At the WWMA 2018 Annual Meeting, Ms. Lisa Warfield (NIST OWM) commented that this regulation is adopted by five states. The FMI and GMA voluntary guidance has been updated. This proposal will harmonize the handbook with their updated guidance. The Committee does not believe that this falls under the jurisdiction of weights and measures. The Committee has offered a new proposal (ODR-NEW) proposing to remove regulation E, Uniform Open Dating Regulation from NIST Handbook 130 in its entirety. If the entire regulation is not removed from the handbook, the Committee believes the discrepancies between existing language and federal language need to be resolved. In the

This publication is available free of charge from: https://doi.org/10.6028/NIST.SP.1253

This publication is available free of charge from: https://doi.org/10.6028/NIST.SP.1253

event this proposal is not withdrawn, the Committee recommends the following changes, which are supported by the submitter.

From the WWMA voting session:

Cadence Matiejevich (Nevada) commented that she will vote to support the Committees recommendation for both ODR 1 and New ODR, but wants to reserve the right for further research to determine a later position

> **2.~~3~~7. Semi Perishable Food** – Any food for which a significant risk of spoilage, loss of value, or loss of palatability **~~occurs only after a minimum of~~ occurs only after a minimum of ~~within~~ 60 days, but within 6 months, after~~, but within 6 months, after~~ ~~of~~** the date of packaging.
>
> **2.~~6~~8. "~~Best If~~ Used By~~" Date~~** – A date **that informs the consumer that the product should be consumed by the date displayed on the label and after the expiration of that date, the food should not be used or consumed and should be properly disposed of. ~~prior to deterioration of qualities described in 2.3. Semi Perishable Food and 2.4. Long Shelf Life Food.~~**
>
> **3.3.2. Responsibility for "USE By" Date. – A retailer who purchases packaged perishable food may upon written agreement with the person who packages such food determine, identify, and be responsible for the "USE By" date placed on or attached to each package of such food.**

At the SWMA 2018 Annual Meeting, Mr. Tim Chesser (Arkansas) and Mr. Tory Brewer (West Virginia) are two states that currently adopt this regulation. They both remarked that their food services department handles this matter and they would like to have this item withdrawn. In addition, they would like to see the regulation removed in its entirety from NIST Handbook 130.

At the NEWMA 2018 Interim Meeting, Mr. John McGuire (New Jersey) commented that he is not opposed to move the item forward, but his bureau does not do open dating. The Chair asked how many states at NEWMA check for dating. Mr. Frank Greene (Connecticut) commented that his state adopts the voluntary version. He commented that dating items can encourage unnecessary waste. A retired regulator from Maine asked how many states have an open dating law? He commented that Maine does not have an open dating law, but baby food and formula have to be taken off sale as regulated by FDA. He believes that it would be difficult to enforce. Mr. Greene commented it is not bad to keep for guidance and recommends it be placed as a developing item and should be fleshed out more as a guidance document. Product open date labeling guidance is well meaning, but enforcement is unlikely. He suggests it be made a guidance document. He suggested that we make it an assigned item and request that it be reviewed and considered by the NCWM Packaging and Labeling Subcommittee (PALS). Mr. Ethan Bogren (Westchester Co., New York) commented that it does not falls under the purview of PALS. The Committee ultimately recommended it be withdrawn from consideration.

At the CWMA 2018 Interim Meeting, Mr. Loren Minnich (Kansas) commented that he supports this item as a way to establish consistent guidelines for best use dates. Mr. Chris Guay (Procter and Gamble) commented that this proposal is an effort by NIST to try to harmonize the NIST Handbook 130 with GMA (Grocers Manufacturers Association) guidelines. Mr. Minnich commented that the Western and the Southern regions are proposing a solution where a single standard will be adopted across the country, but no law will require regulatory enforcement. Julie Quinn (Minnesota) commented that weights and measures in Minnesota is not housed in the Department of Agriculture, so it does not check or enforce "best use" dates. Mr. Minnich commented that he believes it is a food safety issue, and not a weights and measures issue. Mr. Doug Rathbun (Illinois) commented it is outside the realm of weights and measures enforcement. Mr. Ken Tichota (Nebraska) commented that he believes open dating and best use dates falls outside of weights and measures. The Committee believes that there is enough concern that the submitter should gather information from the states to determine if this item or the entirety of Section E should be included in NIST Handbook 130. Consequently, the Committee is recommending that the item be given Developing status.

Additional letters, presentations, and data may have been part of the Committee's consideration and were posted on the NCWM website during the time this item was on the Committee's agenda. To the extent possible, comments and

positions from such documents have been summarized in the committee's report along with comments heard during the Committee's hearings.

ITEM BLOCK 5 (B5) HANDBOOK 130, OPEN DATING REGULATION AND UPDATE WEIGHTS AND MEASURES LAW, SECTION 9 AND 12.

(This block was Adopted.)

B5: WAM-1 V Section 9. Requirements for Open Dating and Section 12. Powers and Duties of the Director.
B5: ODR-2 V Uniform Open Dating Regulation

Purpose:
Remove all reference to Open Dating enforcement from NIST Handbook 130 since it is typically enforced by Food Safety officials rather than Weights and Measures Officials.

B5: WAM-1 V Section 9. Requirements for Open Dating and Section 12. Powers and Duties of the Director.

Source:
Southern Weights and Measures Association (2019)

Item Under Consideration:
Amend NIST Handbook 130 Uniform Weights and Measures Law as follows:

> ~~**Section 9. Requirements for Open Dating** [*NOTE 3*, page 20]~~
>
> ~~**The Uniform Open Dating Regulation as adopted by the NCWM and published in the National Institute of Standards and Technology Handbook 130, "Uniform Laws and Regulations," and supplements thereto or revisions thereof, shall apply to open dating in the state, except insofar as modified or rejected by regulation.**~~
>
> ~~**(Added 1983)**~~

And,

> **Section 12. Powers and Duties of the Director**
>
> The Director shall:
>
> (a) maintain traceability of the state standards as demonstrated through laboratory accreditation or recognition;
> (Amended 2005)
>
> (b) enforce the provisions of this Act;
>
> (c) issue reasonable regulations for the enforcement of this Act, which regulations shall have the force and effect of law;
>
> (d) establish labeling requirements, establish requirements for the presentation of cost per unit information, establish standards of weight, measure, or count, and reasonable standards of fill for any packaged commodity; ~~**and establish requirements for open dating information;**~~
> **(Amended 20XX)**

This publication is available free of charge from: https://doi.org/10.6028/NIST.SP.1253

This publication is available free of charge from: https://doi.org/10.6028/NIST.SP.1253

B5: ODR-2 V Uniform Open Dating Regulation

The following note will appear under the Open Dating Regulation background information. In the 2022 version the entire block will be edited within the NIST Handbook 130.

(Effective January 1, 2022 this regulation will be removed in its entirety.)
(Added 2019)

Source:
Southern and Western Weights and Measures Associations (2019)

Item Under Consideration:
Amend NIST Handbook 130 by deleting the IV Uniform Regulations, E. Uniform Open Dating Regulation in its entirety:

~~Section 1. Purpose, Scope, and Application~~

~~1.1. Purpose.~~ ~~[*NOTE 1*, page 165]~~ **~~— The purpose of this regulation is to prescribe mandatory uniform date labeling of prepackaged, perishable foods and to prescribe optional uniform date labeling that must be used whenever a packager elects to use date labeling on prepackaged foods is intended for use and understanding by both distributors and consumers when judging food qualities.~~**

~~NOTE 1: Alternatively, this regulation may be adopted to require uniformity of open dating of perishable foods whenever a packager voluntarily elects to use date labeling. In such instances Sections 1.1. Purpose and 3.1. "Sell By" Date are reworded in the following manner:~~

> ***~~1.1. Purpose. — The purpose of this regulation is to prescribe uniform date labeling that must be used whenever a packager elects to use date labeling on a prepackaged food. Open date labeling is intended for use and understanding by both distributors and consumers when judging food qualities.~~***
>
> ***~~3.1. "Sell By" Date. — If a retail food establishment elects to sell or offer for sale a prepackaged perishable food identified with a "sell by" date, the "sell by" date used must be as prescribed by this regulation~~***

~~1.2. Scope and Application. — This regulation prescribes the manner of date labeling, the method of determining the appropriate date, required records, responsible persons, and the foods subject to this regulation. This regulation provides for the permissible sale of a regulated food after the expiration of the date on the label. This regulation does not apply to any food that is not prepackaged or is exempted by Section 8.~~

~~Section 2. Definitions~~

~~2.1. "Sell By" Date — A recommended last date of sale that permits a subsequent period before deterioration of qualities described in 2.2. Perishable Food, 2.3. Semi Perishable Food, and 2.4. Long Shelf Life Food.~~

~~2.2. Perishable Food. — Any food having a significant risk of spoilage, loss of value, or loss of palatability within 60 days of the date of packaging.~~

~~2.3. Semi Perishable Food — Any food for which a significant risk of spoilage, loss of value, or loss of palatability occurs only after a minimum of 60 days, but within 6 months, after the date of packaging.~~

~~2.4. Long Shelf Life Food — Any food for which a significant risk of spoilage, loss of value, or loss of palatability does not occur sooner than 6 months after the date of packaging, including foods preserved by freezing, dehydrating, or being placed in a hermetically sealed container.~~

This publication is available free of charge from: https://doi.org/10.6028/NIST.SP.1253

~~2.5. Prepackaged. – Food packaged prior to being displayed or offered for retail sale.~~

~~2.6. "Best If Used By" Date – A date prior to deterioration of qualities described in 2.3. Semi Perishable Food and 2.4. Long Shelf Life Food.~~

~~2.7. Person. – An individual, partnership, association, or corporation.~~

~~Section 3. Sale of Perishable Food and Date Determination~~

~~3.1. "Sell By" Date.~~ ~~[*NOTE 1*, page 165]~~ **~~A retail food establishment shall not sell or offer for sale a prepackaged perishable food unless it is identified with a "sell by" date as prescribed by this regulation.~~**

~~3.2. Sale After Expiration of "Sell By" Date.~~

~~3.2.1. Advertisement. Perishable food shall not be offered for sale after the "sell by" date unless it is wholesome and advertised in a conspicuous manner as being offered for sale after the recommended last date of sale. The placement of a sign, sticker, or tag is acceptable for such advertising if it is easily readable and clearly identifies the perishable food as having passed the recommended last date of sale.~~

~~3.2.2. Responsibility for Advertisement. – The retailer or final seller is responsible for the advertisement, described in Section 3.2.1. Advertisement, of a perishable food offered for sale after the recommended last date of sale.~~

~~3.3. Determination of "Sell By" Date.~~

~~3.3.1. Reasonable Period for Consumption. – A manufacturer, processor, packer, re-packer, retailer, or other person who prepackages perishable food, shall determine a date that allows a reasonable period after sale for consumption of the food without physical spoilage, loss of value, or loss of palatability. A reasonable period for consumption shall consist of at least one third of the approximate total shelf life of the perishable food.~~

~~3.3.2. Responsibility for "Sell By" Date. – A retailer who purchases prepackaged perishable food may upon written agreement with the person prepackaging such food determine, identify, and be responsible for the "sell by" date placed on or attached to each package of such food.~~

~~3.4. Manner of Expressing Date.~~

~~3.4.1. Month and Day, or Day of Week. – A person described in Section 3.3.1. Reasonable Period for Consumption or 3.3.2. Responsibility for "Sell By" Date shall place or attach to each package of perishable food a date by month and day. However, bakery products with a shelf life of not more than seven days may be dated with the day of the week representing the last recommended day of sale.~~

~~3.4.2. The term "Sell By." – The "sell by" date shall be displayed with the term "sell by" or words of similar import immediately preceding or immediately over the designated date unless a prominent notice is on the label describing the date as a "sell by" date and indicating the location of the date.~~

~~3.4.3. Abbreviation of Weekday. – If the day of the week is solely designated as provided in Section 3.4.1. Month and Day, or Day of Week the name of the day may be abbreviated by the use of~~

~~either the first two or first three letters of the name of the day.~~

~~3.4.4. Expression of Month and Day – Except as provided for in Section 3.4.1. Month and Day, or Day of Week the date shall be designated by~~

~~(a) the first three letters of the month, preceded or followed by a numeral indicating the calendar day; or~~

This publication is available free of charge from: https://doi.org/10.6028/NIST.SP.1253

~~(b) the month represented numerically followed by a numeral designation of the calendar day~~

~~The month and day designation shall be separated by a period, slash, dash, or spacing. When a numeral designation of the first nine days of the month is used, the number shall include a zero as the first digit; for example, 01 or 03.~~

~~(Amended 1987)~~

~~3.4.5. Expression of the Year. The "sell by" date may include the year following the day if such year is expressed as a two or four-digit number separated as described in Section 3.4.4. Expression of Month and Day.~~

~~Section 4. Sale of Semi Perishable and Long Shelf Life Food~~

~~4.1. "Best If Used By" Date. A manufacturer, processor, packer, re-packer, or other person who prepackages semi perishable or long shelf life food may place upon or attach to the package an open date providing it is designated by the "best if used by" date.~~

~~4.2. Sale After Expiration of "Best If Used By" Date. A retail food establishment may sell or offer for sale food beyond the designated "best if used by" date provided the food is wholesome and the sensory physical quality standards for that food have not significantly diminished.~~

~~4.3. Manner of Expressing Date. The "best if used by" date as required by Section 4.1. "Best If Used By" Date shall be placed upon or attached to each container or package and be limited to the terms "best if used by" or words of similar import followed by or immediately over the date designated by the month and year unless a prominent notice is on the label describing the date as a "best if used by" date and indicating the location of the date. The date shall be designated by the first three letters of the month followed by a numeral indicating the year. The use of the day of the month is permissible provided that the day of the month is placed prior to the month; for example, 30 Jun 81.~~

~~Section 5. Placement of the Date~~

~~The date, whether "sell by" or "best if used by," shall be printed, stamped, embossed, perforated, or otherwise shown on the package, label on the package, or tag attached to the package in a manner that is easily readable and separate from other information, graphics, or lettering so as to be clearly visible to a prospective purchaser. The date shall not be superimposed on other required information or obscured by other information, graphics, or pricing. Regardless of the type size used, the date shall be easily readable. These requirements do not preclude a supplemental notice elsewhere on a package describing and/or indicating the location of the date.~~

~~Section 6. Factors for the Date Determination~~

~~A person who, as provided for in this regulation, places either the "sell by" date or "best if used by" date on a package shall determine the date by taking into consideration the food quality, characteristics, formulation, processing impact, packaging or container and other protective wrapping or coating, customary transportation, and storage and display conditions. For purposes of calculating this date, home storage conditions shall be considered to be similar to those in the usual retail store except that the date for refrigerated food may be calculated by using a home storage temperature standard of 40 °F (4.4 °C).~~

~~Section 7. Records~~

~~A person who is responsible for establishing the date for perishable, semi perishable, and long shelf life food shall keep a record of the method used to determine the date. A record revision is necessary whenever a factor affecting date determination is altered. Such record shall be retained for not less than six months after the most recent "sell by" or "best if used by" date and shall be available during normal business hours for examination upon request by _____ (agency name).~~

This publication is available free of charge from: https://doi.org/10.6028/NIST.SP.1253

~~**Section 8. Exemptions**~~

~~**8.1. This regulation does not apply to perishable fruits or vegetables in a container permitting sensory examination.**~~

~~**8.2. This regulation does not apply to prepackaged perishable foods open dated according to requirements of federal law or regulation.**~~

~~**Section 9. Preemption of Local, County, and Municipal Ordinance**~~

~~**A municipality or county shall not adopt or impose standards or requirements other than those provided for in this regulation.**~~

~~**Section 10. Effective Date**~~

~~**This regulation shall become effective on and after _____.**~~

Background/Discussion:
At the 2019 NCWM Interim Meeting comments were taken concurrently for ODR-1 and Block 5 (WAM-1 & ODR-2.) A majority of regulators supported items contained in Block 5. A clear majority of commenters believe regulatory responsibilities contained in ODR-1 fall outside of purview of weights and measures officials. Comments indicated that food safety officials would hold the duties of enforcement regarding this item. With consideration to the comments heard, the Committee recommends Block 5 as a Voting item.

At the 2019 NCWM Annual Meeting, Mr. Frank Greene (Connecticut) remarked that his state does enforce this regulation. Mr. Greene requested that it be modified to put in a sunset date of January 2022 to allow time for them to adopt their own regulation. The Committee does not want to cause an undue burden to Connecticut and Nevada and concurs with Mr. Greene's request to apply a sunset date to this regulation.

The following note will appear under the Open Dating Regulation background information. In the 2022 version the entire block will be edited within the NIST Handbook 130.

(Effective January 1, 2022 this regulation will be removed in its entirety.)
(Added 2019)

Regional Association Comments:
At the WWMA 2018 Annual Meeting, the Committee does not believe that open dating regulations fall under the jurisdiction of weights and measures because it is a food safety and/or product quality issue. Nevada is the only state in the western region that currently adopts this regulation. There are four other states in other regions that adopt this regulation. This new item is related to ODR-1. In the event ODR-1 moves forward, this item should be withdrawn. The Committee believes this should be recommended as a Voting Item to remove the regulation from NIST Handbook 130.

Ms. Cadence Matiejevich (Nevada), commented that she will vote to support Committee's recommendation for both ODR 1 and ODR-2, but wants to reserve the right for further research to determine a later position

At the SWMA 2018 Annual Meeting, the Committee, after reviewing Item ODR-1 is recommending that the regulation be removed from the handbook. They base this recommendation from information noted that states that do adopt this regulation are not doing enforcement. It was noted that his purview falls within the Food & Safety Divisions within the states. The SWMA also noted that, if the Open Dating Regulation is removed, reference to open dating enforcement should be removed from the Uniform Weights and Measures Law in NIST Handbook 130.

At the 2019 CWMA Annual Meeting there were no comments heard on this item.

At the 2019 NEWMA Annual Meeting, Ms. Lisa Warfield (NIST Technical Advisor) commented that there are only five states that adopt open dating regulations, Connecticut being one of them. Ms. Warfield also noted that Item ODR-2 must also move forward if this item moves forward. The Committee believes that all items in this block are fully developed and ready for voting status.

Additional letters, presentations, and data may have been part of the Committee's consideration and were posted on the NCWM website during the time this item was on the Committee's agenda. To the extent possible, comments and positions from such documents have been summarized in the committee's report along with comments heard during the Committee's hearings.

ITEM BLOCK 3 (B3) FUELS AND AUTOMOTIVE LUBRICANTS INSPECTION LAW, SECTION 8. PROHIBITED ACTS. METHOD OF SALE, SECTION 2.14 OIL. FUELS & AUTOMOTIVE REGS. SECTION 2.14. ENGINE (MOTOR) OIL, 3.13. OIL AND 7.2. REPRODUCIBILITY LIMITS.

B3: FLL-1	A	Section 8. Prohibited Acts
B3: MOS-4	A	Section 2.33. Oil
B3: FLR-5	A	Sections 2.14. Engine (Motor) Oil, 3.13. Oil and 7.2. Reproducibility Limits.

Source:
Independent Lubricant Manufacturers Association (ILMA) (2018)

Purpose:
Provide information to protect consumers from purchasing obsolete motor oils that can harm modern engines.

B3: FLL-1 A Section 8. Prohibited Acts

Item Under Consideration:
Amend NIST Handbook 130, Uniform Fuels and Automotive Lubricants Inspection Law, Section 8.6. Prohibited Acts.

Section 8. Prohibited Act

It shall be unlawful to:
8.6. Misrepresent automotive lubricants with an S.A.E. (Society of Automotive Engineers) viscosity grade or API (American Petroleum Institute) service classification other than those ~~**specified**~~ by the intended purchaser.
(Added 1996) **(Amended 20XX)**

B3: MOS-4 A Section 2.33. Oil

Item Under Consideration:
Amend NIST Handbook 130, Uniform Method of Sale of Commodities Regulation as follows:

2.33. Oil.

2.33.1. Labeling of Vehicle Engine (Motor) Oil. – Vehicle engine (motor) oil shall be labeled.

2.33.1.1. Viscosity. – The label on any vehicle engine (motor) oil container, receptacle, dispenser, or storage tank, and any invoice or receipt from service on an engine that includes the installation of vehicle engine (motor) oil dispensed from a receptacle, dispenser, or storage tank, shall contain the viscosity grade

This publication is available free of charge from: https://doi.org/10.6028/NIST.SP.1253

This publication is available free of charge from: https://doi.org/10.6028/NIST.SP.1253

classification preceded by the letters "SAE" in accordance with SAE International's latest version of SAE J300, "Engine Oil Viscosity Classification."

NOTE: *If an invoice or receipt from service on an engine has limited room for identifying the viscosity, brand, and service category, then abbreviated versions of each may be used on the invoice or receipt and the letters "SAE" may be omitted from the viscosity classification.*

(Note added 2014)

(Amended 2014)

2.33.1.2. Brand. – The label on any vehicle engine (motor) oil container and the invoice or receipt from service on an engine that includes the installation of bulk vehicle engine (motor) oil dispensed from a receptacle, dispenser, or storage tank shall contain the name, brand, trademark, or trade name of the vehicle engine (motor) oil.

(Amended 2014)

2.33.1.3. Engine Service Category. – The label on any vehicle engine (motor) oil container, receptacle, dispenser, or storage tank and the invoice or receipt from service on an engine that includes the installation of bulk vehicle engine (motor) oil dispensed from a receptacle, dispenser, or storage tank shall contain the engine service category, or categories, displayed in letters not less than 3.18 mm ($^1/_8$ in) in height, as defined by the latest version of SAE J183, "Engine Oil Performance and Engine Service Classification (Other than "Energy Conserving")," API Publication 1509, "Engine Oil Licensing and Certification System," European Automobile Manufacturers Association (ACEA), "European Oil Sequences," or other Vehicle or Engine Manufacturer standards as approved in Section 2.33.1.3.1. Vehicle or Engine Manufacturer Standard.

(Amended 2014)

2.33.1.3.1. Vehicle or Engine Manufacturer Standard. – The label on any vehicle engine (motor) oil container, receptacle, dispenser, or storage tank and the invoice or receipt from service on an engine that includes the installation of vehicle engine (motor) oil dispensed from a receptacle, dispenser, or storage tank shall identify the specific vehicle or engine manufacturer standard, or standards, met in letters not less than 3.18 mm ($^1/_8$ in) in height. If the vehicle (motor) oil only meets a vehicle or engine manufacturer standard, the label must clearly identify that the oil is only intended for use where specifically recommended by the vehicle or engine manufacturer.

(Added 2014)

2.33.1.3.2. Inactive or Obsolete Service Categories. ~~**The label on any vehicle engine (motor) oil container, receptacle, dispenser, or storage tank and the invoice or receipt from service on an engine that includes the installation of bulk vehicle engine (motor) oil dispensed from a receptacle, dispenser, or storage tank shall bear a plainly visible cautionary statement in compliance with the latest version of SAE J183, Appendix A, whenever the vehicle engine (motor) oil in the container or in bulk does not meet an active API service category as defined by the latest version of SAE J183, "Engine Oil Performance and Engine Service Classification (Other than "Energy Conserving")." If a vehicle engine (motor) oil is identified as only meeting a vehicle or engine manufacturer standard, the labeling requirements in Section 2.33.1.3.1. Vehicle or Engine Manufacturer Standard applies.**~~ **Whenever any vehicle engine (motor) oil in a container, receptacle, dispenser, storage tank or in bulk does not meet an active API service category as listed in the latest version of SAE J183, "Engine Oil Performance and Engine Service Classification (Other than "Energy Conserving")," the front or forward facing label of such vehicle engine (motor) oil container, receptacle, dispenser, or storage tank and the invoice or receipt from service on an engine that includes the installation of bulk vehicle engine (motor) oil dispensed from a receptacle, dispenser, or storage tank shall bear the plainly-visible, cautionary statement set forth in Appendix A of the latest version of SAE J183. Whenever any vehicle engine (motor) oil is declared obsolete by a vehicle or engine manufacturer, the front or forward-facing label of such vehicle engine (motor) oil container, receptacle, dispenser, or storage tank and the invoice or receipt from service on an engine that includes the installation of bulk vehicle engine**

This publication is available free of charge from: https://doi.org/10.6028/NIST.SP.1253

(motor) oil dispensed from a receptacle, dispenser, or storage tank shall bear the plainly-visible, cautionary required by the vehicle or engine manufacturer.~~**, and its front or forward-facing label and the invoice or receipt shall bear a plainly-visible, cautionary statement depicted in one of the applicable following three categories:**~~

(Amended 2014 **and 20XX**)

2.33.1.4. Tank Trucks or Rail Cars. Tank trucks, rail cars, and other types of delivery trucks that are used to deliver bulk vehicle engine (motor) oil are not required to display the SAE viscosity grade and service category or categories on such tank trucks, rail cars, and other types of delivery trucks**. In lieu of such display requirements, the documentation defined in 2.33.1.5 shall be readily available for inspection.**

(Amended 2013 ~~**and**~~ 2014 **and 20XX**)

2.33.1.5. Documentation. –When the engine (motor) oil is sold in bulk, an invoice, bill of lading, shipping paper, or other documentation must accompany each delivery. This document must identify the quantity of bulk engine (motor) oil delivered as defined in Sections 2.33.1.1. Viscosity**; grade as defined by SAE J300 "Engine Oil Viscosity Classification,"** 2.33.1.2. Brand, 2.33.1.3. Engine Service Category; the name and address of the seller and buyer; and, the date and time of the sale. For inactive or obsolete service categories, the documentation shall also bear **the** ~~**a**~~ plainly visible cautionary statement**s** as required in Section 2.33.1.3.2. Inactive or Obsolete Service Categories. Documentation must be retained at the retail establishment for a period of not less than one year.

(Added 2013) (Amended 2014 **and 20XX**)

(Added 2012) (Amended 2013 ~~**and**~~ 2014 **and 20XX**)

B3: FLR-5 A Sections 2.14. Engine (Motor) Oil, 3.13. Oil and 7.2. Reproducibility Limits.

Item Under Consideration:
Amend NIST Handbook 130, Uniform Fuels and Automotive Lubricants Regulation as follows:

Section 2. Standard Specification

2.14. Engine (Motor) Oil. – Shall not be sold or distributed for use unless the product conforms to the following specifications:

(a) performance claims **made regarding active performance categories, as** listed on the label shall be evaluated against the latest version of SAE J183, "Engine Oil Performance and Engine Service Classification," API 1509 "Engine Oil Licensing and Certification System," European Automobile Manufacturers' Association (ACEA), "European Oil Sequences," or other "Vehicle or Engine Manufacturer Standards" as applicable; ~~**and**~~

(b) performance claims made regarding any obsolete performance categories, as listed on the label, shall be determined to meet the requirements of Section 3.13.1.3.2. "Inactive or Obsolete Service Categories" by displaying the appropriate cautionary labeling and

(c) the product shall meet its labeled viscosity grade specification as specified in the latest version of SAE J300, "Engine Oil Viscosity Classification."

(Added 2004) (Amended 2014 **and 20XX**)

This publication is available free of charge from: https://doi.org/10.6028/NIST.SP.1253

Section 3. Classification and Method of Sale

3.13. Oil.

3.13.1. Labeling of Vehicle Engine (Motor) Oil Required.

3.13.1.1. Viscosity. –The label on any vehicle engine (motor) oil container, receptacle, dispenser, or storage tank and the invoice or receipt from service on an engine that includes the installation of bulk vehicle engine (motor) oil dispensed from a receptacle, dispenser, or storage tank shall contain the viscosity grade classification preceded by the letters "SAE" in accordance with the SAE International's latest version of SAE J300, "Engine Oil Viscosity Classification."

(Amended 2012 and 2014)

3.13.1.2. Brand. –The label on any vehicle engine (motor) oil container and the invoice or receipt from service on an engine that includes the installation of bulk vehicle engine (motor) oil dispensed from a receptacle, dispenser, or storage tank shall contain the name, brand, trademark, or trade name of the vehicle engine (motor) oil.

(Added 2012 and 2014)

3.13.1.3. Engine Service Category. –The label on any vehicle engine (motor) oil container, receptacle, dispenser or storage tank and the invoice or receipt from service on an engine that includes the installation of bulk vehicle engine (motor) oil dispensed from a receptacle, dispenser, or storage tank shall contain the engine service category, or categories, displayed in letters not less than 3.18 mm (1/8 in) in height, as defined by the latest version of SAE J183, "Engine Oil Performance and Engine Service Classification (Other than "Energy Conserving")" API Publication 1509, "Engine Oil Licensing and Certification System," European Automobile Manufacturers Association (ACEA), "European Oil Sequences," or other "Vehicle or Engine Manufacturer Standards" as provided in Section 3.13.1.3.1.

(Amended 2012 and 2014)

3.13.1.3.1. Vehicle or Engine Manufacturer Standard. –The label on any vehicle engine (motor) oil container, receptacle, dispenser, or storage tank and the invoice or receipt from service on an engine that includes the installation of vehicle engine (motor) oil dispensed from a receptacle, dispenser, or storage tank shall identify the specific vehicle or engine manufacturer standard, or standards, met in letters not less than 3.18 mm (1/8 in) in height. If the vehicle (motor) oil only meets a vehicle or engine manufacturer standard, the label must clearly identify that the oil is only intended for use where specifically recommended by the vehicle or engine manufacturer.

(Added 2014)

3.13.1.3.2. Inactive or Obsolete Service Categories. ~~**–The label on any vehicle engine (motor) oil container, receptacle, dispenser, or storage tank and the invoice or receipt from service on an engine that includes the installation of vehicle engine (motor) oil dispensed from a receptacle, dispenser, or storage tank shall bear a plainly visible cautionary statement in compliance with the latest version of SAE J183, "Engine Oil Performance and Engine Service Classification (Other than "Energy Conserving")" Appendix A, whenever the vehicle engine (motor) oil in the container or in bulk does not meet an active API service category as defined by the latest version of SAE J183, "Engine Oil Performance and Engine Service Classification (Other than "Energy Conserving")." If a vehicle engine (motor) oil is identified as only meeting a vehicle or engine manufacturer standard, the labeling requirements in Section 3.13.1.3.1. Vehicle or Engine Manufacturer Standard applies.**~~ **Whenever any vehicle engine (motor) oil in a container, receptacle, dispenser, storage tank or in bulk does not meet an active API service category as listed in the latest version of SAE J183, "Engine Oil Performance and Engine Service Classification (Other than "Energy Conserving")," the front or forward-facing label of such vehicle engine (motor) oil container, receptacle, dispenser, or storage tank and the invoice or receipt from service on an engine that includes the installation of bulk vehicle engine (motor) oil dispensed from a receptacle, dispenser, or storage tank shall bear the plainly-visible, cautionary statement set forth**

This publication is available free of charge from: https://doi.org/10.6028/NIST.SP.1253

in Appendix A of the latest version of SAE J183. Whenever any vehicle engine (motor) oil is declared obsolete by a vehicle or engine manufacturer, the front or forward-facing label of such vehicle engine (motor) oil container, receptacle, dispenser, or storage tank and the invoice or receipt from service on an engine that includes the installation of bulk vehicle engine (motor) oil dispensed from a receptacle, dispenser, or storage tank shall bear the plainly-visible, cautionary required by the vehicle or engine manufacturer.

(Added 2012) (Amended 2014 **and 20XX)**

3.13.1.4. Tank Trucks or Rail Cars. – Tank trucks, rail cars, and types of delivery trucks that are used to deliver bulk vehicle engine (motor) oil are not required to display the SAE viscosity grade and service category or categories on such tank trucks, rail cars, and other types of delivery trucks. **In lieu of such display requirements, the documentation defined in 3.13.1.5. shall be readily available for inspection.**

(Added 2012) (Amend 2013**,** ~~and~~ 2014 **and 20XX**)

3.13.1.5. Documentation. – When the engine (motor) oil is sold in bulk, an invoice, bill of lading, shipping paper, or other documentation must accompany each delivery. This document must identify the quantity of bulk engine (motor) oil delivered as defined in Sections 3.13.1.1. Viscosity **grade as defined by SAE J300 "Engine Oil Viscosity Classification"**; 3.13.1.2. Brand; 3.13.1.3. Engine Service Category; the name and address of the seller and buyer; and the date and time of the sale. For inactive or obsolete service categories, the documentation shall also bear a plainly visible cautionary statement as required in Section 3.13.1.3.2. Inactive or Obsolete Service Categories. Documentation must be retained at the retail establishment for a period of not less than one year.

(Added 2013) (Amended 2014)

(Amended 2012, 2013, 2014 **and 20XX**)

3.13.2. Labeling of Recreational Motor Oil.

3.13.2.1. Viscosity. The label on each container of recreational motor oil shall contain the viscosity grade classification preceded by the letters "SAE" in accordance with the SAE International's latest version of SAE J300, "Engine Oil Viscosity Classification."

3.13.2.2. Intended Use. – The label on each container of recreational motor oil shall contain a statement of its intended use in accordance with the latest version of SAE J300, "Engine Oil Viscosity Classification."

Section 7. Test Methods and Reproducibility Limits

7.2. Reproducibility Limits.

7.2.3. SAE Viscosity Grades for Engine Oils. ~~**All values are critical specifications as defined in the latest version of ASTM D3244, "Standard Practice for Utilization of Test Data to Determine Conformance with Specifications." The product shall be considered to be in conformance if the Assigned Test Value (ATV) is within the specification.**~~ **With the exception of the low-temperature cranking viscosity, all values required to define SAE Viscosity Grades, as defined in the latest version of SAE J300, "Engine Oil Viscosity Classification", are critical specifications as defined by the latest version of ASTM D3244.**

(Added 2008**) (Amended 20XX)**

Background/Discussion:
Consumers are being misled and are not being adequately informed under existing NIST Handbook 130 provisions about the performance of "obsolete" oils in the engines of their vehicles. Many of these obsolete oils can damage modern engines. The submitter recognizes that there may be as many as 14 million vehicles that can use pre-1988 motor oils.

At the 2018 NCWM Interim Meeting, Mr. Bill Striejewske (FALS Chairman), indicated that FALS is recommending this as a Voting item. In addition, support was heard from ILMA, API, and several regulators recommending this

This publication is available free of charge from: https://doi.org/10.6028/NIST.SP.1253

item as a Voting item. However, many commenters stated that editorial and minor changes were still needed for the item to be fully developed. Tim Elliot (Washington) recommended that this item have streamlined language to use a generic warning statement. Suggestions were also provided on the ultimate placement of the label. Due to lack of consensus, potentially non-editorial changes, and lack of specific details on proposed changes, the L&R Committee recommends this item be "Assigned" to FALS for further development to address the issues mentioned in this write-up.

At the 2018 NCWM Annual, Mr. Striejewske remarked that FALS received modified language from the submitter and FALS is recommending this item remain Assigned with the updated.

At the 2019 NCWM Interim Meeting comments were heard from members of FALS stating that the level of discussion desired was not had due to the absence of the submitter at the FALS meeting that was held Sunday, January 13, 2019. There were several comments regarding the term "modern" not being defined in the cautionary statements. Several stakeholders and regulators feel these items need further review and clarification. A Kansas regulator stated that the caution statement is incorrect and should be modified because it is oil being sold, not an engine. After consideration the committee recommends this item remain Assigned to FALS.

At the 2019 NCWM Annual Meeting Mr. Striejewske (FALS Chair) commented that the submitter has a revision (May 10, 2019) to the FALS Committee for consideration. The Committee moves forward this language for consideration.

Regional Association Comments:
At the WWMA 2018 Annual Meeting, the Committee received several comments expressing concerns regarding this proposal. The Committee believes these are valid concerns that should be reviewed and addressed by the submitter. The Committee believes these issues are best addressed by the submitter and is recommending this as a Developing Item.

- Mr. Mahesh Albuquerque (Colorado) expressed concerns about the lack of complaints in the market, which generally drives updates to the handbook. He also indicated the proposed modifications related to "performance claims" and cautionary requirements that are difficult to defend in court. He also stated section 2.14 references active performance categories, which is not clearly defined. Lastly, he questioned the how a regulator would know what would be considered a modern diesel/gasoline engine.

- Mr. Kevin Ferrick (API) is supportive of the language, with the exception of one typo (an unnecessary semi-colon in 2.33.1.5).

- Mr. Kurt Floren (Los Angeles County, California) agreed with the comments expressed by Mr. Albuquerque. Additionally, Mr. Floren requested clarification on FLL- 1: 8.6. Prohibited Acts, regarding the strikeout of the word "specified."

- Mr. Elliott (Washington) also agreed with Mr. Albuquerque and Mr. Floren. He expressed that cautionary statements should be more generic and less specific to accommodate future circumstances and they should also be easy for the consumer to understand. Mr. Elliott also stated that the language stating "SAE believes" shown in the cautionary statements is not appropriate and should be rephrased. The Committee recommends language such as "In accordance with SAE J183, this product does not meet ….."

- Additionally, Mr. Floren recommended, and the committee agrees, with changes to the language in FLR-5, Section 2.14. Engine (Motor) Oil as shown below with double underline and double strikethrough:

2.14. Engine (Motor) Oil. – Shall not be sold or distributed for use unless the product conforms to the following specifications:

(a) performance claims **made** ~~**against**~~ **regarding active performance categories, as** listed on the label shall be evaluated against the latest version of SAE J183, "Engine Oil Performance and Engine Service Classification," API 1509 "Engine Oil Licensing and Certification System," European Automobile

Manufacturers' Association (ACEA), "European Oil Sequences," or other "Vehicle or Engine Manufacturer Standards" as applicable;

(b) **performance claims made ~~against~~ regarding any obsolete performance categories, as listed on the label, shall be determined to meet the requirements of Section 3.13.1.3.2. "Inactive or Obsolete Service Categories" by displaying the appropriate cautionary labeling and**

(c) the product shall meet its labeled viscosity grade specification as specified in the latest version of SAE J300, "Engine Oil Viscosity Classification."

At the SWMA 2018 Annual Meeting, the Committee heard from Lisa Warfield (NIST OWM) that this language was modified by the submitter at the 2018 NCWM Annual Meeting. The Committee believes this item is fully developed and should be elevated to Voting status.

At the 2018 NEWMA Interim Meeting, Mr. John McGuire (New Jersey) commented clarification on Item FLL-1. Section 8.6. Prohibited Acts is needed because it does not read correctly, and request that the submitter modify for clarity. Mr. Mike Sikula (New York) does not support this language, and recommends it goes back to the submitter for further development. Chuck Corr asks if MOS-4 should be put into this section of the NIST Handbook. John McGuire (New Jersey), recommended the following changes:

2.33.1.4. Tank Trucks or Rail Cars. Tank trucks, rail cars, and other types of delivery trucks that are used to deliver bulk vehicle engine (motor) oil are not required to display the SAE viscosity grade and service category or categories on such tank trucks, rail cars, and other types of delivery trucks**. In lieu of such display ~~requirements,~~ the documentation requirements ~~defined in~~ must be adhered to in section 2.33.1.5 ~~shall be readily available for inspection.~~**

(Amended 2013 ~~and~~ 2014 **and 20XX**)

2.33.1.5. Documentation. –When the engine (motor) oil is sold in bulk, an invoice, bill of lading, shipping paper, or other documentation must accompany each delivery. This document must identify the quantity of bulk engine (motor) oil delivered as defined in Sections 2.33.1.1. Viscosity**; grade as defined by the latest version of SAE J300 "Engine Oil Viscosity Classification,"** 2.33.1.2. Brand, 2.33.1.3. Engine Service Category; the name and address of the seller and buyer; and, the date and time of the sale. For inactive or obsolete service categories, the documentation shall also ~~bear a~~ **have** plainly visible cautionary statement**s** as required in Section 2.33.1.3.2. Inactive or Obsolete Service Categories. Documentation must be retained at the retail establishment for a period of not less than one year **and shall be readily available for inspection.**

And,

3.13.1.4. Tank Trucks or Rail Cars. - Tank trucks, rail cars, and types of delivery trucks that are used to deliver bulk vehicle engine (motor) oil are not required to display the SAE viscosity grade and service category or categories on such tank trucks, rail cars, and other types of delivery trucks. **In lieu of such display ~~requirements,~~ the documentation requirements ~~defined in~~ must be adhered to in section 2.33.1.5 ~~shall be readily available for inspection.~~**

(Added 2012) (Amend 2013~~, and~~ 2014 **and 20XX**)

3.13.1.5. Documentation. – When the engine (motor) oil is sold in bulk, an invoice, bill of lading, shipping paper, or other documentation must accompany each delivery. This document must identify the quantity of bulk engine (motor) oil delivered as defined in Sections 3.13.1.1. Viscosity **grade as defined by standard SAE J300 "Engine Oil Viscosity Classification"**; 3.13.1.2. Brand; 3.13.1.3. Engine Service Category; the name and address of the seller and buyer; and the date and time of the sale. For inactive or obsolete service categories, the documentation shall also bear a plainly visible cautionary statement as required in Section 3.13.1.3.2. Inactive or Obsolete Service Categories. Documentation must be retained at the retail establishment for a period of not less than one ~~year~~ **and shall be readily available for inspection.**

This publication is available free of charge from: https://doi.org/10.6028/NIST.SP.1253

This publication is available free of charge from: https://doi.org/10.6028/NIST.SP.1253

After some discussion, the Committee determined this proposal be changed back to Developing status, and the submitter review the modified language recommended by NEWMA.

At the 2019 NEWMA Annual Meeting, Lisa Warfield (NIST Technical Advisor) commented that she worked with the submitter to obtain the most current language for the 2019 Spring regional Meetings and the 2019 NCWM Annual Report. The current language differs from the language that appeared in the 2019 NCWM Publication 15. Mr. Mike Sikula (New York) opposed this item because weights and measures are to be the neutral party, and this item is too one-sided and favorable for the manufacturers. He believes this item shows bias and should be reworded to address that issue. Mr. John McGuire (New Jersey) is unsure of B3: FLL-1, Section 8.6. Prohibited Acts and wishes to understand why the term "specified" is being stricken.". Even with "specified" stricken in the sentence, the entire Section 8.6 is not clear to its intent. Based on the comments received and the need for clarification of terms, the Committee believes the item should remain in Assigned status to allow the submitter ample time to address New Jerseys concerns.

At the CWMA 2018 Interim Meeting, Mr. Kevin Ferrick (API) suggested that the committee review comments and recommendations made by the Western L&R Committee. Mr. Ferrick suggest the phrase "SAE believes" should be stricken, and a reference to a specific standard should appear in its place. He believes there is an ongoing legal challenge related to this issue. The handbook currently has language that covers obsolete oils that references SAE J183, but the submitter believes the language should provide more guidance. Doug Rathbun (Illinois) supports this item moving forward with some language cleanup. Charlie Stutesman (Kansas) is confused about the intent of Section 8.6 of the prohibitive act. Determining obsolete oils is challenging itself, but his state is working through the complexities they see in the marketplace. He gave several examples of why Section C is not necessary. He believes further work that needs to be done on this issue. Also, he asked what determines a "modern diesel engine." Based on the testimony heard in open hearings, and the confusing topics listed below, the Committee believes this item should remain in Assigned status.

1) clarity on "modern" diesel/gasoline engine or elimination of the term "modern"

2) clarity on Section 8.6. Prohibited Acts in Item FLL–1

3) clarify the need for Item FLR – 5: Section 3.13.1.3.2.(c)

At the CWMA 2019 Annual Meeting, Ms. Lisa Warfield (NIST Technical Advisor) commented that the language that appears in this CWMA agenda is different from what was in NCWM Publication 15 for the 2019 Interim Meeting. After searching online and in the Appendix, CWMA was unable to identify the changes between the 2019 Interim version and the CWMA agenda. The Committee believes this item should continue with Assigned status.

Additional letters, presentations, and data may have been part of the Committee's consideration and were posted on the NCWM website during the time this item was on the Committee's agenda. To the extent possible, comments and positions from such documents have been summarized in the committee's report along with comments heard during the Committee's hearings.

ITEM BLOCK 4 (B4) TRACTOR HYDRAULIC FLUID

B4: MOS-6	V	Uniform Method of Sale of Commodities Regulation, Section 2.39 Tractor Hydraulic Fluid
B4: FLR-6	V	Uniform Fuels and Automotive Lubricants Regulation, Sections 1.XX. Tractor Hydraulic Fluid, 1.XX. Hydraulic Fluid, 2.XX. Products for Use in Lubricating Tractors and 3.XX. Tractor Hydraulic Fluid

(This block was Adopted.)

Source:
The Lubrizol Corporation (2019)

This publication is available free of charge from: https://doi.org/10.6028/NIST.SP.1253

Purpose:
Prevent product misrepresentation and equipment failure.

B4: MOS-6 V Regulation for the Uniform Method of Sale of Commodities Regulation: Section 2.39. Tractor Hydraulic Fluid

(This block was Adopted.)

Item Under Consideration:
Amend NIST Handbook 130, Uniform Regulation for the Method of Sale of Commodities as follows:

2.39. Tractor Hydraulic Fluid.

2.39.1. Products for Use in Lubricating Tractors. – Tractor hydraulic fluids shall meet at least one current and/or verifiable original equipment manufacturer's specifications for respective tractors. A specification is deemed verifiable if all necessary bench and laboratory test are available to verify the fluid's ability to pass those requirements set out by the original equipment manufacturer. A list of current and verifiable specifications is located on NCWM website (www.ncwm.com**). Where a fluid can be licensed against an original equipment manufacturer's specification, evidence of current licensing by the marketer is acceptable documentation of performance against the specification. In the absence of a license from the original equipment manufacturer, adherence to the original equipment manufacturer's specifications shall be assessed after testing per relevant methods available to the lubricants industry and the regulatory agency. Suitability for use claims shall be based upon appropriate field, bench, and/or rig testing. Any manufacturer of a tractor hydraulic fluid making suitable for use claims shall provide, upon request by a duly authorized representative of the Director, credible documentation of such claims. If the product performance claims published by a blender and/or marketer are based on the claim(s) of one or more additive suppliers, documentation of the claims shall be provided upon request to a duly authorized representative of the Director. Supporting data shall, upon request, be supplied directly to the Director's office by the additive supplier(s).**

2.39.1.1. Conformance. – Conformance of a fluid per Section 2.39.1. Products for Use in Lubricating Tractors does not absolve the obligations of a fluid licensee with respect to the licensing original equipment manufacturer or the original equipment manufacturer's licensing agent(s), where relevant.

2.39.1.2. Tractor Hydraulic Fluid Additives. –Any material offered for sale or sold as an additive to tractor hydraulic fluids shall be compatible with the tractor hydraulic fluid to which it is added and shall meet all performance claims as stated on the label or published on any website referenced by the label. Any manufacturer of any such product sold shall provide, upon request by a duly authorized representative of the Director, documentation of any claims made on their product label or published on any website referenced by the label.

2.39.2. Labeling and Identification of Tractor Hydraulic Fluid. – Tractor hydraulic fluids shall be labeled or identified as described below.

2.39.2.1. Container Labeling. – The label on a container of tractor hydraulic fluid shall not contain any information that is false or misleading. Containers include bottles, cans, multi-quart or liter containers, pails, kegs, drums, and intermediate bulk containers (IBCs). In addition, each container of tractor hydraulic fluid shall be labeled with the following:

(a) the brand name;

(b) the name and place of business of the manufacturer, packer, seller, or distributor;

This publication is available free of charge from: https://doi.org/10.6028/NIST.SP.1253

(c) the words "Tractor Hydraulic Fluid," which may include words such as "Hydraulic Fluid for Agricultural Applications" or "Universal Tractor Transmission Oil";

(d) the primary claim or claims met by the fluid and reference to where any supplemental claims may be viewed (e.g., website reference). Performance claims are those set by original equipment manufacturers;

(e) any obsolete equipment manufacturer specifications should be clearly identified as "obsolete" and accompanied by the following warning on the front package label in clearly legible font size and color:

Caution: Some of the specifications are no longer deemed active by the original equipment manufacturer. Significant harm to the transmission, hydraulic system, seals, final drive or axles is possible when using this product in applications in which it is not intended.

The above warning is not required if the fluid claims to meet current original equipment manufacturer's specifications and refers to thereby preceding specifications.

(f) an accurate statement of the quantity of the contents in terms of liquid measure.

2.39.2.2. Identification on Documentation. – Tractor hydraulic fluid sold in bulk shall be identified on the manufacturer, packer, seller, or distributor invoice, bill of lading, shipping paper, or other documentation with the information listed below:

(a) the brand name;

(b) the name and place of business of the manufacturer, packer, seller, or distributor;

(c) the words "Tractor Hydraulic Fluid," which may include words such as "Hydraulic Fluid for Agricultural Applications" or "Universal Tractor Transmission Oil";

(d) the primary claim or claims met by the fluid and reference to where any supplemental claims may be viewed (e.g., website reference). Performance claims are those set by original equipment manufacturers;

(e) any obsolete equipment manufacturer specifications should be clearly identified as "obsolete" and accompanied by the following warning on the front package label in clearly legible font size and color:

Caution: Some of the specifications are no longer deemed active by the original equipment manufacturer. Significant harm to the transmission, hydraulic system, seals, final drive or axles is possible when using in applications in which it is not intended.

The above warning is not required if the fluid claims to meet current original equipment manufacturer's specifications and refers to thereby preceding specifications.

(f) an accurate statement of the quantity of the contents in terms of liquid measure.

2.39.2.3. Identification on Service Provider Documentation. – Tractor hydraulic fluid installed from a bulk tank at time of service shall be identified on the customer invoice with the information listed below:

(a) the brand name;

(b) the name and place of business of the service provider;

This publication is available free of charge from: https://doi.org/10.6028/NIST.SP.1253

(c) the words "Tractor Hydraulic Fluid," which may include words such as "Hydraulic Fluid for Agricultural Applications" or "Universal Tractor Transmission Oil";

(d) the primary claim or claims met by the fluid and reference to where any supplemental claims may be viewed (e.g., website reference). Performance claims are those set by original equipment manufacturers;

(e) any obsolete equipment manufacturer specifications should be clearly identified as "obsolete" and accompanied by the following warning on the front package label in clearly legible font size and color:

Caution: Some of the specifications are no longer deemed active by the original equipment manufacturer. Significant harm to the transmission, hydraulic system, seals, final drive or axles is possible when using in applications in which it is not intended.

The above warning is not required if the fluid claims to meet current original equipment manufacturer's specifications and refers to thereby preceding specifications.

(f) an accurate statement of the quantity of the contents in terms of liquid measure.

2.39.2.4. Bulk Delivery. – When the tractor hydraulic fluid is sold in bulk, an invoice, bill of lading, shipping paper, or other documentation must accompany each delivery. This document must identify the fluid as defined in Section 2.39.2.2. Identification on Documentation.

2.39.2.5. Storage Tank Labeling. – Each storage tank of tractor hydraulic fluid shall be labeled with the following:

(a) the brand name;

(b) the primary performance claim or claims met by the fluid or reference to where these claims may be viewed (for example, website reference). Performance claims are those set by original equipment manufacturers

2.39.3. Documentation of Claims Made Upon Product Label. – Any manufacturer, packer, or distributor of any product subject to this article and sold shall provide, upon request of duly authorized representatives of the Director, credible documentation of any claim made upon their product label, including claims made on any website referenced by said label. If the product performance claims published by a blender and/or marketer are based on the claim(s) of one or more additive suppliers, documentation of the claims shall be provided upon request to a duly authorized representative of the Director. Supporting data shall, upon request, be supplied directly to the Director's office by the additive supplier(s).

(Added 2019)

B4: FLR-6 V Uniform Fuels and Automotive Lubricants Regulation, Sections 1.54. Tractor Hydraulic Fluid, 1.31. Hydraulic Fluid, 2.22. Products for Use in Lubricating Tractors and 3.17. Tractor Hydraulic Fluid

Item Under Consideration:
Amend NIST Handbook 130, Uniform Fuels and Automotive Lubricants Regulation as follows:

Section 1. Definitions

1.54. Tractor Hydraulic Fluid. - A product intended for use in tractors with a common sump for the transmission, final drives, wet brakes, axles and hydraulic system.

(Added 2019)

This publication is available free of charge from: https://doi.org/10.6028/NIST.SP.1253

1.31. Hydraulic Fluid. – A product intended for use in multiple applications with a dedicated hydraulic system and sump. Such fluids cannot be used in tractors. See Tractor Hydraulic Fluid for reference.

(Added 2019)

Section 2. Standard Specifications

2.22. Products for Use in Lubricating Tractors. – Tractor hydraulic fluids shall meet at least one current and/or verifiable original equipment manufacturer's specifications for respective tractors. A specification is deemed verifiable if all necessary bench and laboratory test are available to verify the fluid's ability to pass those requirements set out by the original equipment manufacturer. A list of current and verifiable specifications is located on the NCWM website (www.ncwm.com**). Where a fluid can be licensed against an original equipment manufacturer's specification, evidence of current licensing by the marketer is acceptable documentation of performance against the specification. In the absence of a license from the original equipment manufacturer, adherence to the original equipment manufacturer's specifications shall be assessed after testing per relevant methods available to the lubricants industry and the regulatory agency. Suitability for use claims shall be based upon appropriate field, bench, and/or rig testing. Any manufacturer of a tractor hydraulic fluid making suitable for use claims shall provide, upon request by a duly authorized representative of the Director, credible documentation of such claims. If the product performance claims published by a blender and/or marketer are based on the claim(s) of one or more additive suppliers, documentation of the claims shall be provided upon request to a duly authorized representative of the Director. Supporting data shall, upon request, be supplied directly to the Director's office by the additive supplier(s).**

2.22.1. Conformance. – Conformance of a fluid per Section 2.22. Products for Use in Lubricating Tractors does not absolve the obligations of a fluid licensee with respect to the licensing original equipment manufacturer or the original equipment manufacturer's licensing agent(s), where relevant.

2.22.2. Tractor Hydraulic Fluid Additives. – Any material offered for sale or sold as an additive to tractor hydraulic fluids shall be compatible with the tractor hydraulic fluid to which it is added and shall meet all performance claims as stated on the label or published on any website referenced by the label. Any manufacturer of any such product sold shall provide, upon request by a duly authorized representative of the Director, documentation of any claims made on their product label or published on any website referenced by the label.

(Added 2019)

Section 3. Classification and Method of Sale

3.17. Tractor Hydraulic Fluid

3.17.1. Labeling and Identification of Tractor Hydraulic Fluid. – Tractor hydraulic fluid shall be labeled or identified as described below

3.17.1.1. Container Labeling. – The label on a container of tractor hydraulic fluid shall not contain any information that is false or misleading. Containers include bottles, cans, multi-quart or liter containers, pails, kegs, drums, and intermediate bulk containers (IBCs). In addition, each container of tractor hydraulic fluid shall be labeled with the following:

(a) the brand name;

(b) the name and place of business of the manufacturer, packer, seller, or distributor;

(c) the words "Tractor Hydraulic Fluid," which may include words such as "Hydraulic Fluid for Agricultural Applications" or "Universal Tractor Transmission Oil";

This publication is available free of charge from: https://doi.org/10.6028/NIST.SP.1253

(d) the primary performance claim or claims met by the fluid and reference to where any supplemental claims may be viewed (e.g., website reference). Performance claims are those set by original equipment manufacturers;

(e) any obsolete equipment manufacturer specifications should be clearly identified as "obsolete" and accompanied by the following warning on the front package label in clearly legible font size and color:

Caution*:* Some specifications are no longer deemed active by the original equipment manufacturer. Significant harm to the transmission, hydraulic system, seals, final drive or axles is possible when using in applications in which it was not intended.

The above warning is not required if the fluid claims to meet current original equipment manufacturer's specifications and refers to thereby preceding specifications.

(f) an accurate statement of the quantity of the contents in terms of liquid measure.

3.17.1.2. Identification on Documentation. – Tractor hydraulic fluid sold in bulk shall be identified on the manufacturer, packer, seller or distributor invoice, bill of lading, shipping paper, or other documentation with the information listed below:

(a) the brand name;

(b) the name and place of business of the manufacturer, packer, seller, or distributor;

(c) the words "Tractor Hydraulic Fluid," which may include words such as "Hydraulic Fluid for Agricultural Applications" or "Universal Tractor Transmission Oil";

(d) the primary performance claim or claims met by the fluid and reference to where any supplemental claims may be viewed (e.g., website reference). Performance claims include but are not limited to those set by original equipment manufacturers;

(e) any obsolete equipment manufacturer standard should be clearly identified as "obsolete" and accompanied by the following warning on the front package label in clearly legible font size and color:

Caution: Some of the specifications are no longer deemed active by the original equipment manufacturer. Significant harm to the transmission, hydraulic system, seals, final drive or axles is possible when using in applications in which it is not intended.

(f) The above warning is not required if the fluid claims to meet current original equipment manufacturer's specifications and refers to thereby preceding specifications.an accurate statement of the quantity of the contents in terms of liquid measure.

3.17.1.3. Identification on Service Provider Documentation. – Tractor hydraulic fluid installed from a bulk tank at time of service shall be identified on the customer invoice with the information listed below:

(a) the brand name;

(b) the name and place of business of the service provider;

(c) the words "Tractor Hydraulic Fluid," which may include words such as "Hydraulic Fluid for Agricultural Applications" or "Universal Tractor Transmission Oil";

This publication is available free of charge from: https://doi.org/10.6028/NIST.SP.1253

(d) the primary claim or claims met by the fluid and reference to where any supplemental claims may be viewed (e.g., website reference). Performance claims are those set by original equipment manufacturers;

(e) any obsolete equipment manufacturer specifications should be clearly identified as "obsolete" and accompanied by the following warning on the front package label in clearly legible font size and color:

Caution: Some of the specifications are no longer deemed active by the original equipment manufacturer. Significant harm to the transmission, hydraulic system, seals, final drive or axles is possible when using in applications in which it is not intended.

The above warning is not required if the fluid claims to meet current original equipment manufacturer's specifications and refers to thereby preceding specifications.

(f) an accurate statement of the quantity of the contents in terms of liquid measure.

3.17.1.4. Bulk Delivery. – When the tractor hydraulic fluid is sold in bulk, an invoice, bill of lading, shipping paper, or other documentation must accompany each delivery. This document must identify the fluid as defined in Section 3.17.1.1. Container Labeling.

3.17.1.5. Storage Tank Labeling. – Each storage tank of tractor hydraulic fluid shall be labeled with the following:

(a) the brand name;

(b) the primary performance claim or claims met by the fluid and reference to where any supplemental claims may be viewed (e.g., website reference). Performance claims are those set by original equipment manufacturers;

3.17.1.6. Documentation of Claims Made Upon Product Label. – Any manufacturer, packer, or distributor of any product subject to this article and sold shall provide, upon request of duly authorized representatives of the Director, credible documentation of any claim made upon their product label, including claims made on any website referenced by said label. If the product performance claims published by blender and/or marketer are based on the claim(s) of one or more additive suppliers, documentation of the claims shall be provided upon request to a duly authorized representative of the Director. Supporting data shall, upon request, be supplied directly to the Director's office by the additive supplier(s).

(Added 2019)

Background/Discussion:
Fluids labeled as tractor hydraulic fluids claiming to meet obsolete specifications, such as John Deere 303, have been sold to consumers resulting in product misrepresentation and equipment failure. Often, these fluids do not meet any current specifications, therefore, product quality cannot be assured. Often the reference to John Deere's obsolete specification is confused with product quality assurance, even though original equipment manufacturers, such as John Deere do not stand behind these products. Current original equipment manufacturers' tractor hydraulic fluid specifications must be backward compatible to these obsolete specifications; therefore, oil marketers should not be making their primary performance claims based on these obsolete specifications.

Oil marketers and consumers argue that fluids meeting current specifications are significantly more expensive than fluids claiming to meet obsolete specifications. They argue that those who own older equipment calling for these specifications should have a more economical alternative available for purchase.

At the 2019 NCWM Interim Meeting many comments were heard supporting the merit of this item. FALS did recommend the item was ready for vote. However, some regulators did support the current language provided by the

This publication is available free of charge from: https://doi.org/10.6028/NIST.SP.1253

submitter December 20, 2018, other regulators and industry members felt further development was necessary. ILMA did not support this block because they have a member that uses napthenic base stocks and believes that an oil marketer should be allowed to publish its product specifications and then test against those specifications. In addition, since October ILMA has been working on a generic specification for obsolete tractor fluids. Within MOS-6, Section 2.XX. Tractor Hydraulic Fluid it cited that a listing of current and verifiable specifications would be found under the NCWM website. The Committee all concurred that the best location for this listing would be on the NIST OWM publication website for NIST Handbook 130. Lubrizol will need to work with NIST OWM to determine if the latest listing is always maintained.

A NEWMA representative had concerns that the updated language had not had the opportunity for review by the regions. A regulator from Colorado had concerns that rather than adopting a specification we are manufacturing a specification and would prefer ASTM be charged with creating the specification. With consideration of the support from FALS that this item be moved to vote with further clarification pending if necessary. The Committee recommends this item as a Voting item.

On July 9, 2019 NCWM sent an e-mail notice out to all members with amended language from the submitter. This is the language that the members and Committee used for the Annual Meeting. It was noted that this modified language omitted Section 3.XX.1.3. Identification on Service Provider Documentation. The Committee reviewed this omitted language and believed that it was an unintentional omission. Therefore, the Committee revised the language to include this section for the Voting session. The omitted section was included in the Committees addendum and there were no negative comments heard on the floor.

Regional Association Comments:
At the WWMA 2018 Annual Meeting, the Committee heard a presentation from Ms. Lilla Voros (Lubrizol) regarding the proposal. The presentation is posted on the WMA 2018 Annual Meetings website. The Committee recommends this be a Developing Item based on the following comments received.

- Ms. Lisa Warfield (NIST OWM) noted that the header under the Item under Consideration should be changed from Uniform Packaging and Labeling to Method of Sale on page 34 and the Uniform Packaging and Labeling Regulation should be changed to Fuels and Lubricants on page 37. The title of FLR-6 should be "Uniform Fuels and Automotive Lubricants Regulations" (remove the word engine).
- Ms. Cadence Matijevich (Nevada) commented that the confidentiality requirements may differ from state to state and materials submitted under confidentiality may need to meet specific state requirements. Although Ms. Voros pointed out this language was based upon the Automatic Transmission Fluid regulation within NIST Handbook 130, the Committee and submitter believe the language regarding confidentiality should be removed from the proposal (as shown in the revised language below).
- Mr. Kurt Floren (Los Angeles County, California), Steven Harrington (Oregon), and Bill Striejewske (Nevada) support the item moving forward as a Developmental Item.
- Mr. Floren provided comments for Item Block 4(B4) MOS-6 and FLR-6.

At the WWMA voting session, Mr. Floren commented that there may have been an omission from recommendations that was heard during open hearings. For Item FLR-6 no modification was made to Section 3.XX.1.6. Documentation of Claims Made Upon Product Label, "in this state" will be stricken, and the word "shall" will replace "may be" in next to last line of the same section.

Corrections accepted by Committee before vote, and a correction made to final report.

Item MOS-6 had the following changes are recommended:

2.XX.1. Products for Use in Lubricating Tractors. – Tractor hydraulic fluids shall meet at least one current original equipment manufacturer's requirements for ~~those~~ respective tractors or have demonstrated performance claims to be suitable for use in those tractors. Where a fluid can be licensed against an original equipment manufacturer's specification, evidence of current licensing by the marketer is acceptable documentation of performance against the specification. In the absence of a license from the

original equipment manufacturer, adherence to the original equipment manufacturer's recommended requirements shall be assessed after testing per relevant methods available to the lubricants industry and the state regulatory agency. Suitability-for-use claims shall be based upon appropriate field, bench, and/or rig testing. Any manufacturer of a tractor hydraulic fluid making suitable-for-use claims shall provide, upon request by a duly authorized representative of the Director, credible documentation of such claims. If the product performance claims published by a blender and/or marketer are based on the claim(s) of one or more additive suppliers, documentation of the claims ~~may be requested~~ shall be provided upon request ~~in confidence~~ by a duly authorized representative of the Director. Supporting data ~~may~~ shall be supplied upon request directly to the Director's office by the additive supplier(s).

2.XX.1.1. Conformance. – Conformance of a fluid per Section 2.XX.1. Products for Use in Lubricating Tractors does not absolve the obligations of a fluid licensee with respect to the licensing original equipment manufacturer or the original equipment manufacturer's licensing agent(s), where relevant.

2.XX.1.2. Tractor Hydraulic Fluid Additives. –Any material offered for sale or sold as an additive to tractor hydraulic fluids shall be compatible with the tractor hydraulic fluid to which it is added and shall meet all performance claims as stated on the label or published on any website referenced by the label. Any manufacturer of any such product sold ~~in this state~~ shall provide, upon request by a duly authorized representative of the Director, documentation of any claims made on their product label or published on any website referenced by the label.

FLR-6 the following changes are recommended:

2.XX. Products for Use in Lubricating Tractors. –Tractor hydraulic fluids shall meet at least one current original equipment manufacturer's requirements for ~~those~~ respective tractors or have demonstrated performance claims to be suitable for use in those tractors. Where a fluid can be licensed against an original equipment manufacturer's specification, evidence of current licensing by the marketer is acceptable documentation of performance against the specification. In the absence of a license from the original equipment manufacturer, adherence to the original equipment manufacturer's recommended requirements shall be assessed after testing per relevant methods available to the lubricants industry and the state regulatory agency. Suitability for use claims shall be based upon appropriate field, bench, and/or rig testing. Any manufacturer of a tractor hydraulic fluid making suitable-for-use claims shall provide, upon request by a duly authorized representative of the Director, credible documentation of such claims. If the product performance claims published by a blender and/or marketer are based on the claim(s) of one or more additive suppliers, documentation of the claims ~~may be requested in confidence~~ shall be provided upon request by a duly authorized representative of the Director. Supporting data ~~may~~ shall be supplied directly to the Director's office by the additive supplier(s).

2.XX.1. Conformance. – Conformance of a fluid per Section 2.XX. Products for Use in Lubricating Tractors does not absolve the obligations of a fluid licensee with respect to the licensing original equipment manufacturer or the original equipment manufacturer's licensing agent(s), where relevant.

2.XX.2. Tractor Hydraulic Fluid Additives. – Any material offered for sale or sold as an additive to tractor hydraulic fluids shall be compatible with the tractor hydraulic fluid to which it is added and shall meet all performance claims as stated on the label or published on any website referenced by the label. Any manufacturer of any such product sold ~~in this state~~ shall provide, upon request by a duly authorized representative of the Director, documentation of any claims made on their product label or published on any website referenced by the label.

3.XX.1.6. Documentation of Claims Made Upon Product Label. –Any manufacturer, packer, or distributor of any product subject to this article and sold ~~in this state~~ shall provide, upon request of duly authorized representatives of the Director, credible documentation of any claim made upon their product label, including claims made on any website referenced by said label. If the product performance claims published by blender and/or marketer are based on the claim(s) of one or more additive suppliers, documentation of the claims ~~may be requested in confidence~~ shall be provided upon

This publication is available free of charge from: https://doi.org/10.6028/NIST.SP.1253

request by a duly authorized representative of the Director. Supporting data ~~may~~ shall be supplied directly to the Director's office by the additive supplier(s).

At the SWMA 2018 Annual Meeting, Mr. Tim Chesser (Arkansas) questioned the intended use for hydraulic fluid for agriculture use. The use of the two terms (tractor hydraulic fluid and agriculture fluid) are confusing to the consumer. The Committee believes that this has merit but believes that wordsmithing does need to be done to the item under consideration. Stephen Benjamin (North Carolina) agreed that industry could use guidance pertaining to this type of product in the marketplace. North Carolina recently tested and took this type of product off-sale. North Caroline did have the company relabel the product. Definitions for products for use and lubricating tractors is too vague. There appears to be a lack of definitions and clarity throughout this item. The Committee recommends this as an Informational item.

At the CWMA 2018 Interim Meeting, Ms. Lilla Voros (Lubrizol) commented that the purpose of this item is to provide more protection for consumers and their equipment against diluted fluids, used oil, and other substandard products being sold as hydraulic fluid. Doug Rathbun (Illinois) asked what performance measures were used to establish general requirements within this proposal. Ms. Voros commented that there are no existing broadly accepted performance measures, so she compiled what she believed are best practices from engine manufacturers. Mr. Rathbun believes there needs to be very specific guidelines, and he does not believe they exist. He supports the concept, but, stressed that there needs to be standards and training for inspectors to better understand enforcement guidelines. Doug Musick (Kansas) asked if the submitter has a recommended status. Ms. Voros believes the item is still developing, and she believes that by January, the proposal should be finalized, and it will move forward. Ron Hayes (Missouri) supports the proposal. Kevin Ferrick (API) supports this effort, and believes it is a positive step in improving model language in NIST Handbook 130. Based on comments heard during the open hearings, the committee believes that defined performance measures standards need to be developed and clarified, so this item should remain as a Developing item. The new proposed language which includes Ms. Voros' latest changes is as follows:

2.XX. Tractor Hydraulic Fluid.

2.XX.1. Products for Use in Lubricating Tractors. – Tractor hydraulic fluids shall meet at least one current original equipment manufacturer's requirements for ~~those~~ respective tractors or have demonstrated performance claims to be suitable for use in those tractors. Where a fluid can be licensed against an original equipment manufacturer's specification, evidence of current licensing by the marketer is acceptable documentation of performance against the specification. In the absence of a license from the original equipment manufacturer, adherence to the original equipment manufacturer's recommended requirements shall be assessed after testing per relevant methods available to the lubricants industry and the ~~state~~ regulatory agency. Suitability-for-use claims shall be based upon appropriate field, bench, and/or rig testing. Any manufacturer of a tractor hydraulic fluid making suitable-for-use claims shall provide, upon request by a duly authorized representative of the Director, credible documentation of such claims. If the product performance claims published by a blender and/or marketer are based on the claim(s) of one or more additive suppliers, documentation of the claims ~~may be requested in confidence by~~ shall be provided to a duly authorized representative of the Director. Supporting data ~~may~~ shall be supplied directly to the Director's office by the additive supplier(s).

2.XX.1.1. Conformance. – Conformance of a fluid per Section 2.XX.1. Products for Use in Lubricating Tractors does not absolve the obligations of a fluid licensee with respect to the licensing original equipment manufacturer or the original equipment manufacturer's licensing agent(s), where relevant.

2.XX.1.2. Tractor Hydraulic Fluid Additives. –Any material offered for sale or sold as an additive to tractor hydraulic fluids shall be compatible with the tractor hydraulic fluid to which it is added and shall meet all performance claims as stated on the label or published on any website referenced by the label. Any manufacturer of any such product sold ~~in this state~~ shall provide, upon request by a duly authorized representative of the Director, documentation of any claims made on their product label or published on any website referenced by the label.

This publication is available free of charge from: https://doi.org/10.6028/NIST.SP.1253

This publication is available free of charge from: https://doi.org/10.6028/NIST.SP.1253

2.XX.2. Labeling and Identification of Tractor Hydraulic Fluid. – Tractor hydraulic fluids shall be labeled or identified as described below.

2.XX.2.1. Container Labeling. – The label on a container of tractor hydraulic fluid shall not contain any information that is false or misleading. Containers include bottles, cans, multi-quart or liter containers, pails, kegs, drums, and intermediate bulk containers (IBCs). In addition, each container of tractor hydraulic fluid shall be labeled with the following:

(a) the brand name;

(b) the name and place of business of the manufacturer, packer, seller, or distributor;

(c) the words "Tractor Hydraulic Fluid," which may include words such as "Hydraulic Fluid for Agricultural Applications" or "Universal Tractor Transmission Oil";

(d) the primary claim or claims met by the fluid and reference to where any supplemental claims may be viewed (e.g., website reference). Performance claims include but are not limited to those set by original equipment manufacturers;

(e) any obsolete equipment manufacturer specifications should be clearly identified as "obsolete" and accompanied by the following warning:

Caution: This specification is no longer deemed active by the original equipment manufacturer. Significant harm to the transmission, hydraulic system, final drive or axles is possible when using in applications in which it is not intended. ~~this product.~~

(f) an accurate statement of the quantity of the contents in terms of liquid measure.

2.XX.2.2. Identification on Documentation. – Tractor hydraulic fluid sold in bulk shall be identified on the manufacturer, packer, seller, or distributor invoice, bill of lading, shipping paper, or other documentation with the information listed below:

(a) the brand name;

(b) the name and place of business of the manufacturer, packer, seller, or distributor;

(c) the words "Tractor Hydraulic Fluid," which may include words such as "Hydraulic Fluid for Agricultural Applications" or "Universal Tractor Transmission Oil";

(d) the primary claim or claims met by the fluid and reference to where any supplemental claims may be viewed (e.g., website reference). Performance claims include but are not limited to those set by original equipment manufacturers;

(e) any obsolete equipment manufacturer specifications should be clearly identified as "obsolete" and accompanied by the following warning:

Caution: This specification is no longer deemed active by the original equipment manufacturer. Significant harm to the transmission, hydraulic system, final drive or axles is possible when using in applications in which it is not intended ~~this product~~.

(f) an accurate statement of the quantity of the contents in terms of liquid measure.

2.XX.2.3. Identification on Service Provider Documentation. – Tractor hydraulic fluid installed from a bulk tank at time of service shall be identified on the customer invoice with the information listed below:

This publication is available free of charge from: https://doi.org/10.6028/NIST.SP.1253

(a) the brand name;

(b) the name and place of business of the service provider;

(c) the words "Tractor Hydraulic Fluid," which may include words such as "Hydraulic Fluid for Agricultural Applications" or "Universal Tractor Transmission Oil";

(d) the primary claim or claims met by the fluid and reference to where any supplemental claims may be viewed (e.g., website reference). Performance claims include but are not limited to those set by original equipment manufacturers;

(e) any obsolete equipment manufacturer specifications should be clearly identified as "obsolete" and accompanied by the following warning:

Caution: This specification is no longer deemed active by the original equipment manufacturer. Significant harm to the transmission, hydraulic system, final drive or axles is possible when using in applications in which it is not intended. ~~this product~~.

(f) an accurate statement of the quantity of the contents in terms of liquid measure.

2.XX.3. Documentation of Claims Made Upon Product Label. –Any manufacturer, packer, or distributor of any product subject to this article and sold ~~in this state~~ shall provide, upon request of duly authorized representatives of the Director, credible documentation of any claim made upon their product label, including claims made on any website referenced by said label. If the product performance claims published by a blender and/or marketer are based on the claim(s) of one or more additive suppliers, documentation of the claims may be requested in confidence by a duly authorized representative of the Director. Supporting data may be supplied directly to the Director's office by the additive supplier(s).

At the 2019 CWMA Annual Meeting, Ms. Beverly Michaels (BP) commented that she appreciates the addition to the "caution statement". They had requested to indicate the possible harm is only using the fluid "in application which it is not intended." However, the requirements to place the "caution" statement on the back of the label have relocated to the front label. BP does not feel it is appropriate to mandate that this caution warning be on the front label. A product can be intended for older models and it should not be required to put an unnecessary statement on the front label. Mr. Ron Hayes (Missouri) commented that he is proposing new language that clarifies the definition of "verifiable" (see below).

B4: MOS-6 a change only to 2.XX.1.

2.XX. Tractor Hydraulic Fluid.

2.XX.1. Products for Use in Lubricating Tractors. – Tractor hydraulic fluids shall meet at least one current and/or verifiable original equipment manufacturer's specifications for respective tractors. A specification is deemed verifiable if all necessary bench and laboratory test are available to verify the fluid's ability to pass those requirements set out by the original equipment manufacturer. A list of current and verifiable specifications can be found under "References" on NCWM's homepage. Where a fluid can be licensed against an original equipment manufacturer's specification, evidence of current licensing by the marketer is acceptable documentation of performance against the specification. In the absence of a license from the original equipment manufacturer, adherence to the original equipment manufacturer's specifications shall be assessed after testing per relevant methods available to the lubricants industry and the regulatory agency. Suitability-for-use claims shall be based upon appropriate field, bench, and/or rig testing. Any manufacturer of a tractor hydraulic fluid making suitable-for-use claims shall provide, upon request by a duly authorized representative of the Director, credible documentation of such claims. If the product performance claims published by a blender and/or marketer are based on the claim(s) of one or more additive suppliers, documentation of the claims shall be provided upon request to a duly authorized

representative of the Director. Supporting data shall, upon request, be supplied directly to the Director's office by the additive supplier(s).

B4: FLR-6, 2.XX. Products for Use in Lubricating Tractors

2.XX. Products for Use in Lubricating Tractors. –Tractor hydraulic fluids shall meet at least one current and/or verifiable original equipment manufacturer's specifications for respective tractors. A specification is deemed verifiable if all necessary bench and laboratory test are available to verify the fluid's ability to pass those requirements set out by the original equipment manufacturer. A list of current and verifiable specifications can be found under "References" on NCWM's homepage. Where a fluid can be licensed against an original equipment manufacturer's specification, evidence of current licensing by the marketer is acceptable documentation of performance against the specification. In the absence of a license from the original equipment manufacturer, adherence to the original equipment manufacturer's specifications shall be assessed after testing per relevant methods available to the lubricants industry and the regulatory agency. Suitability-for-use claims shall be based upon appropriate field, bench, and/or rig testing. Any manufacturer of a tractor hydraulic fluid making suitable-for-use claims shall provide, upon request by a duly authorized representative of the Director, credible documentation of such claims. If the product performance claims published by a blender and/or marketer are based on the claim(s) of one or more additive suppliers, documentation of the claims shall be provided upon request to a duly authorized representative of the Director. Supporting data shall, upon request, be supplied directly to the Director's office by the additive supplier(s).

Ms. Lisa Warfield (NIST Technical Advisor) commented that some of the method of sale and fuels and lubricants language is not consistent, but in some circumstances that is necessary. Mr. Ron Hayes (Missouri) further commented that it was his understanding that NCWM would post the specification on their website that was provided by ILMA and the Manufacturers Association will provide a link. Ms. Warfield clarified the offer that NIST OWM proposed to host the link to the specification with the current NIST Handbook 130. The Committee recommends Mr. Hayes new language with the following clarification that the Original Equipment Manufacturers Specification Supplement list be hosted with the most recent version of NIST Handbook 130 and updates be completed with Lubrizol and FALS, with editorial privileges granted to NIST.

At the NEWMA 2018 Interim Meeting, Ms. Lilla Voros (Lubrizol) gave a presentation on the item. Walt Remmert (Pennsylvania) agrees with the concept but doesn't see how this is enforceable when there is more than 1 standard in the marketplace. Mike Sikula (New York) agrees. Ms. Voros commented that she doesn't see a single industry specification moving forward. Mr. Remmert commented that the manufacturer should make OEM guidance. He is concerned that the regulatory community will have too many standards to enforce. Kristy Moore (KMoore Consulting) asked if the Engine Manufacturers Association (EMA) had been contacted. Mr. Lou Sakin (Massachusetts) commented that it appears this issue is not fully developed. The Committee recommended that the block of items be placed in Developing status for further development

At the 2019 NEWMA Annual Meeting, Ms. Joy Black (Lubrizol Corporation) commented that language has changed (refer to language mentioned in CWMA write-up) to clarify the term "verifiable". Ms. Black further commented that if any of the OEM's issue a new specification, Lubrizol will issue a new document through FALS, prior to it being posted. Mr. Lou Sakin (Hopkinton, Massachusetts) remarked that FALS does not have authority to change Handbook 130. Lisa Warfield (NIST Technical Advisor) commented that the specification document would be a supporting document, not model regulation. Mr. Sikula (New York), has concerns way this issue has developed, it will put weights and measures officials in the position of enforcing something that does not revert back to a specification. Mr. Sikula opposes this item. Ms. Black commented that the engine manufacturers all have specifications, but some of them include very outdated or obsolete standards. Dennis Bachelder (API) commented that engine manufacturers have published numerous specifications for various fluids depending on the year and type of equipment. API's only concern about this item is whether the warning label is on the front or the back of the package. Ms. Beverly Michaels (BP) submitted the following comment via email: "*BP appreciates the addition to the Caution statement to indicate the possible harm is only in using the fluid "in applications which it is not intended. The original proposal did not indicate placement of the Caution statement. In December 2018 a requirement was added that the Caution statement be placed on the front label and that version is what is being reviewed at the Regional meetings. BP does not feel it is appropriate to mandate that this Caution warning be on the front label. A product can be intended for older models*

This publication is available free of charge from: https://doi.org/10.6028/NIST.SP.1253

and it should not be required to put an unnecessary negative statement on the front label". Based on the recommendation of the technical experts within FALS, the NEWMA L&R Committee believes the item is fully developed and should remain a Voting item.

Additional letters, presentations, and data may have been part of the Committee's consideration and were posted on the NCWM website during the time this item was on the Committee's agenda. To the extent possible, comments and positions from such documents have been summarized in the committee's report along with comments heard during the Committee's hearings.

This publication is available free of charge from: https://doi.org/10.6028/NIST.SP.1253

FLR – UNIFORM FUELS AND AUTOMOTIVE LUBRICANTS REGULATION

FLR-1 V Section 3. Classification, Identification, and Labeling for ~~Method of~~ Sale and Section 3.2.4. ~~Method of~~ Labeling for Retail Sale

(This item was Adopted.)

This appeared as part of Item Block 2, B2: FLR-1 in Publication 15 (2019)

Purpose:
This proposal is to harmonize the method of sale for kerosene between the Uniform Regulation for the Method of Sale of Commodities and the Uniform Engine Fuels and Automotive Lubricants Regulation.

Item Under Consideration:
Amend NIST Handbook 130, Uniform Fuels and Automotive Lubricants Regulation as follows:

Section 3. Classification, Identification, and Labeling for ~~Method of~~ Sale
(Amended 2019)

3.2.4. ~~Method of~~ Labeling for Retail Sale – Type of Oxygenate must be disclosed. All automotive gasoline or automotive gasoline-oxygenate blends, or racing gasoline kept, offered, or exposed for sale, or sold at retail containing more than one volume percent oxygenate shall be identified as "with" or "containing" (or similar wording) the predominant oxygenate in the engine fuel. For example, the label may read "contains ethanol" or "with methyl *tertiary*-butyl ether (MTBE)." The oxygenate contributing the largest mass percent oxygen to the blend shall be considered the predominant oxygenate. Where mixtures of only ethers are present, the retailer may post the predominant oxygenate followed by the phrase "or other ethers" or alternatively post the phrase "contains MTBE or other ethers." In addition, gasoline-methanol blends containing more than 0.3 % by volume methanol shall be identified as "with" or "containing" methanol. This information shall be posted on the upper 50 % of the dispenser front panel in a position clear and conspicuous from the driver's position in a type at least 12.7 mm (½ in) in height, 1.5 mm ($^{1}/_{16}$ in) stroke (width of type).
(Amended 2019)

Background/Discussion:
For more information or to provide comment, please contact:

Mr. Bill Striejewske, Chairman of the Fuels and Lubricants Subcommittee
Nevada Department of Agriculture/Bureau of Petroleum Technology
(775) 353-3792, wstriejewske@agri.state.nv.us

The Method of Sale of Commodities and the Uniform Fuels and Automotive Lubricants Regulations have different information for the method of sale for kerosene, liquefied petroleum gas, natural gas fuels, and diesel exhaust fluid.

This publication is available free of charge from: https://doi.org/10.6028/NIST.SP.1253

This proposal is to integrate the information from both regulations to create identical method of sale language in the two regulations.

Information for the method of sale for fuels, lubricants and automotive products currently can appear in the handbook in either the Uniform Regulation for the Method of Sale of Commodities and the Uniform Fuels and Automotive Lubricants Regulation. Sometimes the information for the same product is different in the two regulations which creates an added burden when maintaining and updating the handbook. This proposal is to consolidate and reorganize that information into the Uniform regulation for the Method of Sale of Commodities. This proposal is not intended to modify a specific method of sale. Those modifications should be considered separately by product.

At the 2018 Interim Meeting, Mr. Chuck Corr (ADM) spoke on behalf of a work group under FALS and provided an overview of the Block 2 agenda items. Mr. Corr stated the intent of this item is to reorganize and harmonize language only, and not to make any substantial changes to the language. Mr. Bill Striejewske, Chairman FALS, commented that FALS discussed these agenda items during their meeting and had concerns about possible conflicts between this item and the NIST Handbook 130 working group (Item FLR-9). Mr. Tim Elliott (Washington) commented that all state officials review the proposed language for possible conflicts with state regulations. Mr. Mike Sikula (New York) commented that there is inconsistency between FTC language within 16 CFR 306 and this proposed language related to past editions of the NIST Handbook 130. Mr. Sikula stated that NIST Handbook 130 suggests the most current version of the regulation, and FTC references a specific version. Mr. Sikula believes this inconsistency should be resolved prior to adoption. For these reasons, the L&R Committee decided to Assign this block of items to FALS for further work.

At the 2018 NCWM Annual Meeting Mr. Striejewske (FALS Chair) updated the Committee that this item has undergone a major overhaul within the last six months. The submitter is currently contacting each state to see how it impacts the states. It was also noted that if L&R Item FLR-9 was adopted, sections of this item would need to be updated to reflect the most recent language as it moves forward. FALS agreed to replace the Method of Sale and Fuels and Lubricants language that was developed at the 2018 Fall Regional Meetings. The modified language will appear in the 2019 NCWM Publication 15.

At the 2019 NCWM Interim Meeting comments from regulators and associate members within FALS indicated that they believe FRL-1 is fully developed and ready to be voted on while recognizing that further development is needed regarding MOS-1. After reviewing the comments, the Committee did not assign the same status to both items and they were removed as being a blocked item. FLR-1 is recommended as a Voting item while MOS-1 is assigned back to FALS for additional development.

At the 2019 NCWM Annual there were several regulators that rose in support of this item.

Regional Association Comments:
At the 2018 WWMA Annual Meeting, Mr. Tim Elliot (Washington) presented updated information on this item that is currently assigned to FALS. Mr. Elliott commented that the language contained on the agenda for the WWMA will have significant revisions due to feedback heard at the NCWM 2018 Annual meeting and language within the agenda is no longer relevant. FALS expects the updated proposal language prior to the NCWM Interim Meeting. The WWMA recommends this item remain assigned to FALS.

During the 2019 NEWMA Annual Meeting, Mr. Kevin Adlam (Archer Daniels Midland) made a presentation on behalf of Mr. Chuck Corr to explain the intent of the item and why it was separated from FLR-1 and remarked that the task group is looking for feedback. Mr. Mike Sikula (New York) asked if any of the information is technical in nature, or if it is simply moving identical language from one section to the other. Ms. Lisa Warfield (NIST Technical Advisor) commented that she is recommending that there should be a way to capture the original date and relocation to new sections within the regulations. This would inform the user when it was originally adopted and then when it was relocated to a new regulation. Mr. Jim McInerny (Connecticut), asked if the section of the Handbook where it will be taken from will clarify it has been moved to a different section. Ms. Warfield commented that she has concern for placing this regulation in only one section since some states do not adopt both the Method of Sale and the Fuels Regulations. Ms. Warfield also commented that Section 3.2. is not necessary and should be stricken. Mr. Sikula suggests that NEWMA question why the Conference is working on this proposal and has concerns we will not have anything significant to show for the work. Mr. Walt Remmert (Pennsylvania) recommends that we continue to work

on this item since it is already in development and wants items that appear in two regulations to be identical. The Committee wants to see how the final version of the language will appear in the handbook and encourages the submitter to continue to develop it. NEWMA is recommending this to remain an Assigned Item.

At the 2018 SWMA Annual Meeting, Mr. Corr (ADM) provided a presentation with an overview of the latest changes to the item under consideration. The Committee encourages the work of the focus group to get this fully developed and would like to have this reviewed at FALS.

At the 2018 CWMA Interim Meeting: Mr. Corr (ADM) commented there is new language that supersedes the current language in the agenda. He then gave a presentation about the purpose of the proposal. The new language does not change the intent. Mr. Ron Hayes (Missouri) commented that the regulation of fuel quality was incorporated into the method of sale in 1984. He does not believe it is inappropriate to have fuel quality items in the method of sale, but he does support the proposal to harmonize the sections of NIST Handbook 130, and to remove unnecessary redundancies. The Committee supports further development of this item through the Fuels and Lubricants Subcommittee, and therefore recommends Assigned status for this item.

At the 2019 CWMA Annual Meeting, Mr. Corr (ADM) and submitter of the item gave a presentation to explain the purpose of this item and why it was removed from its previous Block with FLR-1. The status of this item is Assigned, and the task group is working to further develop the proposal for the future. Mr. Corr requested that the Committee keeps track of what criteria are used when adding language to Section B. Ms. Lisa Warfield (NIST Technical Advisor) commented that she had suggested changes for the task group for consideration and would forward them to the submitter. The Committee agrees this item should continue with as an Assigned item.

Additional letters, presentations, and data may have been part of the Committee's consideration and were posted on the NCWM website during the time this item was on the Committee's agenda. To the extent possible, comments and positions from such documents have been summarized in the committee's report along with comments heard during the Committee's hearings.

FLR-7 V Section 2.2. Diesel Fuel

(This item was Adopted.)

Source:
NCWM Fuels and Lubricants Subcommittee (2019)

Purpose:
Update the requirements to better meet the needs of modern diesel engines when a fuel that has functional benefits beyond ASTM Standard Specification D975 is desired by the diesel equipment users.

Item Under Consideration:
Amend NIST Handbook 130 Uniform Fuels and Automotive Lubricants Regulation as follows:

2.2.1. Premium Diesel Fuel. – All diesel fuels identified on retail dispensers**.** ~~**bills of lading, invoices, shipping papers, or other documentation with terms such**~~ as premium, super, supreme, ~~**plus,**~~ or premier must conform to the following **minimum** requirements.

(a) **Cetane Number**. – A minimum cetane number of 47.0 as determined by the latest version of ASTM D613, "Standard Test Method for Cetane Number of Diesel Fuel Oil."

NOTE: **ASTM D613, "Standard Test Method for Cetane Number of Diesel Fuel Oil" is the referee method; however, the following methods can be used to determine cetane number: the latest versions of ASTM D6890, "Standard Test Method for Determination of Ignition Delay and Derived Cetane Number" (DCN) of Diesel Fuel Oils by Combustion in a Constant Volume Chamber"; and ASTM D7668, "Standard Test Method for Determination of Derived Cetane**

This publication is available free of charge from: https://doi.org/10.6028/NIST.SP.1253

This publication is available free of charge from: https://doi.org/10.6028/NIST.SP.1253

Number (DCN) of Diesel Fuel Oils—Ignition Delay and Combustion Delay Using a Constant Volume Combustion Chamber Method."

(Note added 2019)

(b) **Low Temperature Operability**. – A cold flow performance measurement which meets the latest version of ASTM D975, "Standard Specification for Diesel Fuel Oils," tenth percentile minimum ambient air temperature charts and maps by the latest versions of either ASTM D2500, "Standard Test Method for Cloud Point **of Petroleum Products and Liquid Fuels**" or ASTM Standard D4539, "Standard Test Method for Filterability of Diesel Fuels by Low-Temperature Flow Test (LTFT)." **The latest version of ASTM D6371, "Standard Test Method for Cold Filter Plugging Point of Diesel and Heating Fuels" may be used when the test results are a maximum of 6 °C below the Cloud Point.** Low temperature operability is only applicable October 1 to March 31 of each year.

~~**(c) Thermal Stability. – A minimum reflectance measurement of 80 % as determined by the latest version of ASTM Standard Test Method D6468 (180 min, 150 °C).**~~

(c) **Lubricity**. – A maximum wear scar diameter of ~~**520**~~ **460** micrometers as determined by the latest version ASTM D6079, "Standard Test Method for Evaluating Lubricity of Diesel Fuels by the High-Frequency Reciprocating Rig (HFRR)." ~~**If an enforcement jurisdiction's single test of more than 560 micrometers is determined, a second test shall be conducted. If the average of the two tests is more than 560 micrometers, the sample does not conform to the requirements of this part.**~~

NOTE: **The latest version of ASTM D6079, "Standard Test Method for Evaluating Lubricity of Diesel Fuels by the High-Frequency Reciprocating Rig (HFRR)" is the referee method; however, the latest version of ASTM D7688, "Standard Test Method for Evaluating Lubricity of Diesel Fuels by the High-Frequency Reciprocating Rig (HFRR) by Visual Observation" can be used.**

(Note added 2019)

(d) Corrosion. – A minimum rating of B+ as determined by the most recent version of NACE TM0172, "Determining Corrosive Properties of Cargoes in Petroleum Product Pipelines."

NOTE: The latest recent version of NACE TM0172 "Determining Corrosive Properties of Cargoes in Petroleum Product Pipelines" is the referee method. The latest version of ASTM D7548 "Standard Test Method for Determination of Accelerated Iron Corrosion in Petroleum Products" can be used.

(Added 2019)

(e) Filter Blocking Tendency (FBT) – A maximum of 2.2 by ASTM D2068, "Standard Test Method for Determining Filter Blocking Tendency", following procedure B.

(Added 2019)

(f) Injector Deposit Control. – Maximum power loss in keep-clean mode of 2 % by the latest version of Coordinating European Council, CEC F-98-08, "Direct Injection, Common Rail Diesel Engine Nozzle Coking Test."

(Added 2019)

2.2.2. Use of Other Diesel Terminology. – For any terms other than premium, super, supreme, or premier included in the diesel fuel product or grade name and/or advertisements and claims displayed on dispensers, pump toppers, pole signs and bollard signs which imply improved performance, the product must have a clearly-defined fuel property with a substantiated functional benefit. Such property must be measurable utilizing industry accepted test methodologies developed by recognized standards organizations such as ASTM, SAE and CEC to allow verification of the improved performance.

(Added 2019)

(Amended 2003 **and 2019**)

This publication is available free of charge from: https://doi.org/10.6028/NIST.SP.1253

Background/Discussion:
A focus group (FG) was formed in July 2016 to review Section 2.2.1. of Chapter G, Uniform Fuels and Automotive Lubricants Regulation, of NIST Handbook 130 and recommend updates to the premium diesel section. This item aims to update the requirements to better meet the needs of modern diesel engines when a fuel that has functional benefits beyond ASTM Standard Specification D975 is desired by the diesel equipment users. The FG consisted of a broad range of stakeholders. The item being proposed was approved and recommended by FALS to be a voting item for the 2019 NCWM Annual meeting.

At the 2018 NCWM Interim Meeting, Co-chair Mr. Manuch Nikanjam (Chevron) presented the efforts of the focus group. The Premium Diesel FG assessed properties of diesel for their validity in defining a product as Premium. The Subcommittee discussed this work and agreed that it was complete and that a Form 15 should be submitted in time for the Fall 2018 regional meetings. At the 2018 NCWM Annual Meeting, Mr. Randy Jennings (Tennessee) provided an update of the FG's work. This item has the consensus of the Fuels and Lubricants Subcommittee; all comments have been adjudicated and compromises have been made - participants have agreed to move forward with a much-improved premium diesel section and FALS is requesting L&R to consider this as a voting item in 2019.

At the 2019 NCWM Interim Meeting, Bill Striejewske (FALS Chairman) stated that FALS supports moving this item to a Vote. There was regional consensus that this item be moved forward as a Voting item. There was concern from several regulators and industry members that the current language may stifle (i.e. paragraph 2.2.1.) the marketing of higher quality diesel fuel that do not meet the criteria to be classified as premium diesel. Mr. Randy Jennings, the submitter of the item confirmed that the intent of this item was not to hinder the development of higher quality diesel fuels. Several commenters stated that the minority report provides insights to some of the concerns regarding criteria. Considering the comments, the Committee feels that this item is fully developed and recommends Voting status.

At the 2019 NCWM Annual Meeting the language appeared in NCWM Publication 16 as follows:

2.2. **Diesel Fuel**. **-** Shall meet the latest version of ASTM D975, "Standard Specification for Diesel Fuels Oils."

2.2.1. Premium Diesel Fuel. -- All diesel fuels identified on retail dispensers**~~, bills of lading, invoices, shipping papers, or other documentation~~** with **~~terms such as premium, super, supreme, plus, or premier~~** **an additional term incorporated directly in the product or grade name that differentiates the fuel and implies the fuel provides properties that exceed minimum specification limits or performance properties** must conform to the following **minimum** requirements.

EXCEPTION NOTE: ***It*** **is permissible to include a clearly-defined fuel property that has a functional benefit, established test method, and a level, if stated as such. Example is winterized diesel which provides an operability benefit and is discussed in detail in the latest version of ASTM D975 as a recommended guideline.**

(a) **Cetane Number.** - A minimum cetane number of 47.0 as determined by the latest version of ASTM D613, "Standard Test Method for Cetane Number of Diesel Fuel Oil."

NOTE: **ASTM D613 is the referee method; however, the following methods can be used to determine cetane number: the latest versions of ASTM D6890, "Standard Test Method for Determination of Ignition Delay and Derived Cetane Number" (DCN) of Diesel Fuel Oils by Combustion in a Constant Volume Chamber"; ASTM D7170, "Standard Test Method for Determination of Derived Cetane Number (DCN) of Diesel Fuel Oils—Fixed Range Injection Period, Constant Volume Combustion Chamber Method"; and ASTM D7668, "Standard Test Method for Determination of Derived Cetane Number (DCN) of Diesel Fuel Oils—Ignition Delay and Combustion Delay Using a Constant Volume Combustion Chamber Method."**

(b) **Low Temperature Operability.** – A cold flow performance measurement which meets the latest version of ASTM D975, "Standard Specification for Diesel Fuel Oils," tenth percentile minimum ambient air temperature charts and maps by the latest versions of either ASTM D2500, "Standard Test Method for Cloud Point of Petroleum Products and Liquid Fuels" or ASTM Standard D4539, "Standard Test Method for Filterability of Diesel Fuels by Low-Temperature Flow Test (LTFT)." **The latest version of ASTM**

D6371, "Standard Test Method for Cold Filter Plugging Point of Diesel and Heating Fuels" may be used when the test results are a maximum of 6 °C below the Cloud Point. Low temperature operability is only applicable October 1 to March 31 of each year.

~~**(c) Thermal Stability. – A minimum reflectance measurement of 80 % as determined by the latest version of ASTM Standard Test Method D6468 (180 min, 150 °C).**~~

(c) Lubricity. – A maximum wear scar diameter of ~~520~~ **460** micrometers as determined by the latest version ASTM D6079, "Standard Test Method for Evaluating Lubricity of Diesel Fuels by the High-Frequency Reciprocating Rig (HFRR)." ~~**If an enforcement jurisdiction's single test of more than 560 micrometers is determined, a second test shall be conducted. If the average of the two tests is more than 560 micrometers, the sample does not conform to the requirements of this part.**~~

NOTE: The latest version of ASTM D6079, "Standard Test Method for Evaluating Lubricity of Diesel Fuels by the High-Frequency Reciprocating Rig (HFRR)" is the referee method; however, the latest version of ASTM D7688, "Standard Test Method for Evaluating Lubricity of Diesel Fuels by the High-Frequency Reciprocating Rig (HFRR) by Visual Observation" can be used.

(d) Corrosion. – A minimum rating of B+ as determined by the latest version of NACE TM0172, "Determining Corrosive Properties of Cargoes in Petroleum Product Pipelines."

NOTE: The most recent version of NACE TM0172 "Determining Corrosive Properties of Cargoes in Petroleum Product Pipelines" is the referee method. The latest version of ASTM D7548 "Standard Test Method for Determination of Accelerated Iron Corrosion in Petroleum Products" can be used.

(e) Filter Blocking Tendency (FBT) – A maximum of 2.2 by the latest version ASTM D2068, "Standard Test Method for Determining Filter Blocking Tendency," following procedure B.

(f) Injector Deposit Control. – Maximum power loss in keep-clean mode of 2 % by the latest version of Coordinating European Council (CEC), CEC-F-98-08, "Direct Injection, Common Rail Diesel

On July 9, 2019 the NCWM sent an e-mail notice out to all members with amended language from the submitter. This is language that members considered at the Annual Meeting. The Committee did make a modification to the last sentence in Section 2.2.2. to provide clarity that it must be a recognized standards organization.

Regional Association Comments:
At the WWMA 2018 Annual Meeting, Mr. Bill Striejewske (FALS Chair) commented that FALS has worked on this for a couple years and this item is ready for vote. Information regarding these efforts is posted on the NCWM website. Mr. Tim Elliott (Washington) confirmed this should be a voting item. The Committee agrees and believes this item should be assigned as a Voting Item.

At the SWMA 2018 Annual Meeting, there were no comments heard during open hearings. The Committee believes that this item is fully developed and recommends it as a Voting Item.

At the NEWMA 2018 Interim Meeting, Mr. Mike Sikula (New York) stated that he supports the item but is curious about the exception note. The exception note was clarified by Ms. Rebecca Richardson (National Biodiesel Board). Hearing no other comments, the Committee determined the item is fully developed and reading for voting status.

At the 2019 NEWMA Annual Meeting, Russ Lewis (representing API) issued the same changes as were proposed at the CWMA Annual Meeting last week. Mr. Lewis gave a background discussion for how premium diesel fuel has been defined in the past. Mr. Lewis commented that API supports this item moving forward with the following changes from the language that appears in the CWMA regional agenda.

2.2. Diesel Fuel. - Shall meet the latest version of ASTM D975, "Standard Specification for Diesel Fuels Oils."

This publication is available free of charge from: https://doi.org/10.6028/NIST.SP.1253

This publication is available free of charge from: https://doi.org/10.6028/NIST.SP.1253

2.2.1. Premium Diesel Fuel. - All diesel fuels identified on retail dispensers **as Premium, Super, Supreme, or Premier**, ~~**bills of lading, invoices, shipping papers, or other documentation with terms such as premium, super, supreme, plus, or premier an additional term incorporated directly in the product or grade name that differentiates the fuel and implies the fuel provides properties that exceed minimum specification limits or performance properties**~~ must conform to the following minimum requirements.

~~***EXCEPTION NOTE: It is permissible to include a clearly defined fuel property that has a functional benefit, established test method, and a level, if stated as such. Example is winterized diesel which provides an operability benefit and is discussed in detail in ASTM D975 as a recommended guideline.***~~
~~***(Added 20XX)***~~

(a) **Cetane Number.** - A minimum cetane number of 47.0 as determined by the latest version of ASTM D613, "Standard Test Method for Cetane Number of Diesel Fuel Oil."

NOTE: ASTM D613 is the referee method; however, the following methods can be used to determine cetane number: the latest versions of ASTM D6890, "Standard Test Method for Determination of Ignition Delay and Derived Cetane Number" (DCN) of Diesel Fuel Oils by Combustion in a Constant Volume Chamber"; ASTMD7170, "Standard Test Method for Determination of Derived Cetane Number (DCN) of Diesel Fuel Oils—Fixed Range Injection Period, Constant Volume Combustion Chamber Method"; and ASTM D7668, "Standard Test Method for Determination of Derived Cetane Number (DCN) of Diesel Fuel Oils—Ignition Delay and Combustion Delay Using a Constant Volume Combustion Chamber Method."

(b) **Low Temperature Operability.** – A cold flow performance measurement which meets the latest version of ASTM D975, "Standard Specification for Diesel Fuel Oils," tenth percentile minimum ambient air temperature charts and maps by the latest versions of either ASTM D2500, "Standard Test Method for Cloud Point of Petroleum Products and Liquid Fuels" or ASTM Standard D4539, "Standard Test Method for Filterability of Diesel Fuels by Low-Temperature Flow Test (LTFT)." **The latest version of STM Standard Test Method D6371, "Standard Test Method for Cold Filter Plugging Point of Diesel and Heating Fuels" may be used when the test results are a maximum of 6 °C below the Cloud Point.** Low temperature operability is only applicable October 1 to March 31 of each year.

~~**(c) Thermal Stability. – A minimum reflectance measurement of 80 % as determined by the latest version of ASTM Standard Test Method D6468 (180 min, 150 °C).**~~

(c) Lubricity. – A maximum wear scar diameter of ~~**520**~~ **460** micrometers as determined by the latest version ASTM D6079, "Standard Test Method for Evaluating Lubricity of Diesel Fuels by the High-Frequency Reciprocating Rig (HFRR)." ~~**If an enforcement jurisdiction's single test of more than 560 micrometers is determined, a second test shall be conducted. If the average of the two tests is more than 560 micrometers, the sample does not conform to the requirements of this part.**~~

NOTE: The latest version of ASTM D6079, "Standard Test Method for Evaluating Lubricity of Diesel Fuels by the High-Frequency Reciprocating Rig (HFRR)" is the referee method; however, the latest version of ASTM D7688, "Standard Test Method for Evaluating Lubricity of Diesel Fuels by the High-Frequency Reciprocating Rig (HFRR) by Visual Observation" can be used.

(d) Corrosion. – A minimum rating of B+ as determined by the most recent version of NACE TM0172, "Determining Corrosive Properties of Cargoes in Petroleum Product Pipelines."

NOTE: The most recent version of NACE TM0172 "Determining Corrosive Properties of Cargoes in Petroleum Product Pipelines" is the referee method. The most recent version of ASTM D7548 "Standard Test Method for Determination of Accelerated Iron Corrosion in Petroleum Products" can be used.

(e) Filter Blocking Tendency (FBT) – A maximum of 2.2 by ASTM D2068, "Standard Test Method for Determining Filter Blocking Tendency", following procedure B.

(f) Injector Deposit Control. – Maximum power loss in keep-clean mode of 2 % by the latest version of Coordinating European Council, CEC F-98-08, "Direct Injection, Common Rail Diesel Engine Nozzle Coking Test."

2.2.2. For any terms other than Premium, Super, Supreme, or Premier included in the diesel fuel product or grade name and/or advertisements and claims displayed on Pump Toppers, Pole Signs and Bollard Signs which implies improved performance, the product must have a clearly-defined fuel property with a substantiated functional benefit. Such property must be measurable utilizing industry accepted test methodologies such as those in ASTM, SAE, and CEC to allow verification of the improved performance. (Added 20XX)

Mr. Walt Remmert (Pennsylvania) asked who would be enforcing marketing labels. Mr. Remmert is concerned this would put weights and measures inspectors in a position to "police" marketing labels. Mr. Lewis commented that for states who adopt fuel quality regulations, this amended proposal would create some consumer protection, that has not been enforceable before, but even the new language is not perfect. For those states that do not enforce fuel quality, this will not have an impact on enforcement. John McGuire (New Jersey), has concerns that any product other than premium diesel as defined in NIST Handbook 130, will be problematic to enforce. Rebecca Richardson (National Biodiesel Board) does not want to prevent the premium diesel work completed from moving forward and asked if these proposed changes can be reconsidered for the fall series of regional meetings. Ms. Lisa Warfield (NIST Technical Advisor) commented that there are some ambiguous points in the language: under 2.2.2., "substantiated functional benefit" as well as, 'such as' those in ASTM, SAE and CEC…". She wonders if there are others besides these specific standard setting organizations. Mr. Bill Hornbach (Chevron) believes these amendments are not significant changes and supports the amended version of the language. Walt Remmert and Mike Sikula (New York) both support the original language as it appears in the Agenda. The Committee believes the language as it appears on the NEWMA 2019 Annual Meeting Agenda and in NCWM Publication 16 (2019) is fully developed and ready for Voting status. The Committee further believes the amended changes submitted by API have merit and they should consider submitting a Form 15 into NCWM.

At the CWMA 2018 Interim Meeting, Ms. Rebecca Richardson (MARC-IV Consulting and representing the National Biodiesel Board) supports this item moving forward as a Voting item. Ms. Beverly Michaels (BP) also supports the item. Ron Hayes (Missouri) commented that the item has been fully developed and supports the item moving forward as a Voting item. Charlie Stutesman (Kansas) commented that s this is an outstanding proposal and fully supports the item moving forward. Based on comments heard in open hearings, and the support of the Fuels and Lubricants Subcommittee, the Committee recommends this as a Voting item.

At the CWMA 2019 Annual Meeting, Prentiss Searles (API) commented that he is submitting changes to this proposal (refer to the NEWMA report for language under consideration). Mr. Searles remarked that there was significant work that went into this effort, but in reviewing the text there were concerns that it would impede marketing efforts for some products. The amended language would do the following:

1. Add "premium" to the language

2. Add terms "super, supreme and premier" back into the language when fuel meets all criteria for premium

3. If you are using any term other than premium, super, supreme or premier, you must substantiate the claim.

Ms. Lisa Warfield (NIST Technical Advisor) commented that she had concerns in Section 2.2.2. with "substantial functional benefit", how is that defined? In addition, on accepted methodologies such as ASTM, SAE and CEC - who determines which methodologies? Mr. Ron Hayes (Missouri) supports the changes. Mr. Charlie Stutesman (Kansas) supports these proposed revisions. Mr. Ivan Hankins (Iowa) asked what the ideas were behind words besides premium? Mr. Doug Rathbun (Illinois) commented that he has some concerns about the revisions. He believes this could create confusion in the marketplace. Other adjectives can be nebulous. He

This publication is available free of charge from: https://doi.org/10.6028/NIST.SP.1253

This publication is available free of charge from: https://doi.org/10.6028/NIST.SP.1253

does not believe others should be allowed besides the original 6 words considered to mean premium. Ms. Lori Jacobson (South Dakota) commented that these revisions are beyond editorial in nature. Mr. Rod Lawrence (Magellan) commented that when a product leaves the terminal, premium diesel will be indicated on the bill of lading. Mr. Hayes remarked that he does not believe these are substantial changes. The Committee recommends the item move forward with amended language as follows:

Additional letters, presentations, and data may have been part of the Committee's consideration and were posted on the NCWM website during the time this item was on the Committee's agenda. To the extent possible, comments and positions from such documents have been summarized in the committee's report along with comments heard during the Committee's hearings.

FLR-8 W Section 3.2.5. Prohibition of Terms

(This item was Withdrawn.)

Source:
Petroleum Marketers Association of America (PMAA) (2019)

Purpose:
Provide consistency among motor fuel dispensing facilities on the terms used for branding and advertising of ethanol blends greater than 10% so consumers can make informed decisions regardless of the fuel supplier.

Item Under Consideration:
Amend NIST Handbook 130 Uniform Fuels and Automotive Lubricants Regulation as follows:

3.2.3. Prohibition of Terms. – It is prohibited to use specific terms to describe a grade of gasoline or gasoline-oxygenate blend unless it meets the minimum antiknock index requirement shown in Table 1. Minimum Antiknock Index Requirements.

Table 1. Minimum Antiknock Index Requirements

Term	Minimum Antiknock Index	
	ASTM D4814 Altitude Reduction Areas IV and V	All Other ASTM D4814 Areas
Premium, Super, Supreme, High Test**, Premier, Ultra, Ultimate**	90	91
Midgrade, Plus	87	89
Regular, Unleaded (alone)	85	87
Economy	--	86

(Table 1. Amended 1997, 2018, **and 20XX**)

3.2.3.1. Gasoline-Ethanol Blends. - When fuels containing greater than 10 % by volume ethanol are offered for sale, the use of specific grade terms are prohibited unless the fuel meets the minimum antiknock index requirement shown in Table 1. Minimum Antiknock Index Requirements and the grade term is followed by the term "EXX". For example, "Unleaded E15"; "Regular E15"; "Plus E15"; "Premium E15". The grade term including the grade extension of EXX must be posted accurately on both the fuel dispenser and street pricing signs and any other form of signage or advertisement where specific grade terms are posted. (Added 20XX)

For more information or to provide comment, please contact:

This publication is available free of charge from: https://doi.org/10.6028/NIST.SP.1253

Mr. Bill Striejewske, Chairman of the Fuels and Lubricants Subcommittee
Nevada Department of Agriculture/Bureau of Petroleum Technology
(775) 353-3792, **wstriejewske@agri.state.nv.us**

Background/Discussion:
The renewable fuels standard (RFS) has driven an increasing volume of ethanol blended with gasoline. Today most gasoline sold in the US contains up to 10 % by volume ethanol. As the volume requirements for ethanol have increased under the RFS, E15 (gasoline containing up to 15 % by volume ethanol) has been entering the market.

In 2014, the U.S. EPA issued requirements for the introduction of E15 for use in flexible fuel vehicles and passenger vehicles of model year 2001 and newer. The requirements prohibited the use of E15 in all motorcycles, vehicles with heavy-duty engines (e.g., school buses and delivery trucks), off-road vehicles (e.g., boats and snowmobiles), engines in off-road equipment (e.g., chain saws and gasoline lawn mowers), and conventional vehicles older than model year 2001. Because there are limitations on the use of E15, it is important that consumers are aware of the fuel they are purchasing. To address this, EPA required a label on the dispenser describing the limitations for the use of E15; however, it did not address the terms used to brand and advertise this new fuel.

Retailers have taken a variety of approaches with branding and advertising E15 on fuel dispensers as well as on price signs using labels such as "unleaded plus," "unleaded15," "unleaded 88," "Ultra 88," which can be confusing to consumers purchasing fuel. Because E15 has limitations on its use in older vehicles and small engines, it is important that when a consumer is making a choice of fuel to use, the advertising and branding of E15 and possibly other higher gasoline-ethanol blends must be addressed to provide consistency among motor fuel dispensing facilities and to reduce the risk of consumer misfuelling.

The proposed change requires that when gasoline containing greater than 10 % by volume ethanol is offered for sale at a dispenser, if a grade term such as midgrade or premium is used to describe the grade of fuel, the fuel must meet the minimum AKI requirements for the grade term in accordance with the table and the grade term must be followed by EXX (e.g., Midgrade E15).

This proposal is consistent with flex fuel labeling requirements. This proposal is similar to requirements under Tennessee Rule 0080-05-12-.03 Classification and Method of Sale, Subsection (2)(d)(5) & (6). https://publications.tnsosfiles.com/rules/0080/0080-05/0080-05-12.20141203.pdf.

The proposal provides the opportunity to highlight the fuel as a renewable fuel using ethanol. Opposition to this proposal could be a desire not to highlight the ethanol content in branding or advertising or a concern that a consumer may not recognize the significance of the EXX designation.

At the 2019 NCWM Interim Meeting the submitter of this item expressed his desire to have this item be assigned to FALS for further development. The FALS Chairman concurred with this being a FALS assigned items due to a focus group (FG) being formed and tasked with the development of this item. The majority of comments heard from regulators and associate members recommended the item be withdrawn. This item under consideration requires significant development and a majority of membership recommends it be withdrawn until it is further developed. The Committee recommends this item be Withdrawn and reminded FALS that if they develop a proposal, they have the ability to resubmit it NCWM.

Regional Association Comments:
This item was not submitted to the WWMA 2018 Annual Meeting agenda.

At the SWMA 2018 Annual Meeting, there were several letters submitted in opposition of this item. Ms. Moore (Growth Energy) testified that she would like to see this item withdrawn. Mr. Doug Musick (Kansas) opposes this as currently written due to it is discriminatory for other additives. In addition, it duplicates the EXX labeling on gasoline. This would require them post it in two places on the dispenser. The Committee is recommending this item be Withdrawn.

At the NEWMA 2018 Interim Meeting, Ms. Kristy Moore (Growth Energy) commented that she would like to see this item withdrawn due to a lack of data or information that misfueling of E15 exists in the marketplace. There already

This publication is available free of charge from: https://doi.org/10.6028/NIST.SP.1253

is EXX labeling, and it is required by many states. This proposal is duplicative and unnecessary. Jim McInerny (Connecticut) supports the proposal because there are some instances where someone could accidentally fuel. Mike Sikula (New York) asked how this proposal is related to misfuelling? Ms. Moore commented that the rationale for the proposal listed in the appendix describes misfueling. Ms. Moore stated that E15 is illegal in off-road applications, and E10 is available everywhere that E15 is. Ms. Rebecca Richardson (MARC-IV Consulting) asked what this labeling would actually look like and is there a need to be two labels saying the same thing on a dispenser? Regulators from Pennsylvania and New York are questioning what is trying to be accomplished with the proposal that isn't already outlined in FTC guidelines. After considerable discussion, the Committee determined that the proposal is ambiguous, and the proposer needs to provide visual examples of how this proposal would be implemented, as well as rationale or data as to why this proposal is necessary. A Developing status was recommended to allow the submitter to address the issues raised.

At the CWMA 2018 Interim Meeting, Mr. Charlie Stutesman (Kansas) understands the intent but does not support this item. He commented that the only document that sets grade names for fuel is NIST Handbook 130. He believes grade names should be left to the seller. If we start adding terms to the chart, we are limiting retailers as to what they can call their products. Mr. Stutesman recommends this item be withdrawn. Mr. Doug Rathbun (Illinois) opposes the item and recommends it be withdrawn for various reasons including significant pushback from industry. Mr. Rathbun stated he has received multiple letters from the ethanol industry opposing the item. Mr. Mike Harrington (Iowa) opposes the item and recommends it be withdrawn for similar reasons that have been stated. Ms. Julie Quinn (Minnesota) opposes the item. Beverly Michaels (BP) commented that if there is confusion, then the item needs to be sent to FALS before it is dismissed. Rebecca Richardson (M4 and NBB) commented that NBB cannot take a position because there has been no presentation or defense of the proposal by the submitter. Mr. Chuck Corr (ADM) commented that he believes the item should be withdrawn and sent back to the submitter for further development. Mr. Stutesman commented that it is targeting a specific product rather than a group of oxygenates, which is another reason to oppose the item. Since there was no one to speak to the proposal, and the vast majority of the comments were to withdraw the proposal, the Committee is recommending the item be withdrawn for the reasons stated during open hearings.

Additional letters, presentations, and data may have been part of the Committee's consideration and were posted on the NCWM website during the time this item was on the Committee's agenda. To the extent possible, comments and positions from such documents have been summarized in the committee's report along with comments heard during the Committee's hearings.

Priority V Section 2.1. Gasoline and Gasoline-Oxygenate Blends

(This item was Adopted.)

Source:
Growth Energy (2019)

Purpose:
Amend Section 2.1.2 of the Uniform Regulations, Section G. Gasoline and Gasoline- Oxygenate blends to reference the U.S. EPA Title 40 Protection of the Environment, Section 80.27(d) to include higher blends of ethanol by the summer driving season (June 1, 2019) on the special provisions for alcohol blends while eliminating the reference to specific ethanol content.

Item Under Consideration:
Amend NIST Handbook 130 Uniform Fuels and Automotive Lubricants Regulation as follows:

2.1. Gasoline and Gasoline-Oxygenate Blends

2.1.2. Gasoline-Ethanol Blends. –When gasoline is blended with denatured fuel ethanol, the denatured fuel ethanol shall meet the latest version of ASTM D4806, "Standard Specification for Denatured Fuel Ethanol for Blending with Gasolines for Use as Automotive Spark-Ignition Engine Fuel," and the blend shall meet the latest

This publication is available free of charge from: https://doi.org/10.6028/NIST.SP.1253

version of ASTM D4814, "Standard Specification for Automotive Spark-Ignition Engine Fuel," with the following permissible exceptions:

(a) The maximum vapor pressure shall not exceed the latest edition of ASTM D4814, "Standard Specification for Automotive Spark-Ignition Engine Fuel," limits by more than~~: (1)~~ 1.0 psi for blends ~~**containing 9 to 10 volume percent ethanol**~~ from June 1 through September 15 as allowed by EPA **per 40 CFR 80.27(d)**.

(Amended 2016, ~~and~~ 2018**, and 2019**)

NOTE 1: *The values shown above appear only in U.S. customary units to ensure that the values are identical to those in ASTM standards and the Environmental Protection Agency regulation.*

(Added 2009) (Amended 2012 and 2016)

Background/Discussion:
This item was deemed a "priority" item by the L&R Committee for consideration at the Annual Meeting of the National Conference of Weights and Measures in July 2019.

The Committee reviewed the comments heard during open hearings that were in support and in opposition of the submitted language. There was a recommendation made during open hearings to provide clearer language in the NIST Handbook that specified a range of ethanol and gasoline ethanol blends by simply striking the 10 % and replacing it with 15 %. Several members concurred with this recommended modification. The FALS Chair reported there was robust discussion on this item and there was diversity of opinion. There was no clear consensus. Some FALS members felt that the item under consideration should be adopted as submitted. Other FALS members believe that a review of the regulations should be done to make sure there are no other conflicts between the NIST Handbook 130 Fuels regulations related to the EPA rule. These same comments were heard during open hearings. The L&R Committee will be assigning a task to the FALS to review the existing NIST Handbook regulations against the EPA rule. The Committee did not make a change to the item under consideration.

POL – NCWM POLICY, INTERPRETATIONS AND GUIDELINES

POL-1 W Section 2.3.2. Fresh Fruits and Vegetables

(This item was Withdrawn.)

Source:
Nash Finch Produce (2019)

Purpose:
Allow the sale of sweet potatoes and yams by count.

Item Under Consideration:
Amend NIST Handbook 130, NCWM Policy, Interpretations and Guidelines as follows:

2.3.2. Fresh Fruits and Vegetables.
(L&R, 1979, p. 176; 1980; 1982, p. 152; 2008)

Guideline

Recognizing the difficulty faced by consumers when more than one method of sale is employed in the same outlet for the same product, non-comparable methods of sale (e.g., weight and measure) for the same produce item in the same outlet should be minimized.

This guideline applies to all sales of fruits and vegetables. There are two tables, one for specific commodities and one for general commodity groups. Search the specific list first to find those commodities that either do not fit into any of the general groups or have unique methods of sale. If the item is not listed, find the general group in the second table. The item may be sold by any method of sale marked with an X.

(Amended 2008)

Method of Retail Sale for Fresh Fruits and Vegetables
Specific Commodity

Commodity	Weight	Count	Head or Bunch	Dry Measure (any size)	Dry Measure (1 dry qt or larger)
Artichokes	X	X			
Asparagus	X		X		
Avocados		X			
Bananas	X	X			
Beans (green, yellow, etc.)	X				X
Brussels Sprouts (loose)	X				
Brussels Sprouts (on stalk)			X		
Cherries	X			X	X
Coconuts	X	X			
Corn on the Cob		X			X
Dates	X				
Eggplant	X	X			
Figs	X				
Grapes	X				
Melons (cut in pieces)	X				
Mushrooms (small)	X			X	X
Mushrooms (portobello, large)	X	X			
Okra	X				
Peas	X				X
Peppers (bell and other varieties	X	X			X
Pineapples	X	X			
Rhubarb	X		X		
Sweet Potatoes/Yams	**X**	**X**			**X**
Tomatoes (except cherry/grape)	X	X			X
Berries and Cherry/Grape Tomatoes	X			X	
Citrus Fruits (oranges, grapefruits, lemons, etc.)	X	X			X
Edible Bulbs (onions [spring or green], garlic, leeks, etc.)	X	X	X		X

This publication is available free of charge from: https://doi.org/10.6028/NIST.SP.1253

Method of Retail Sale for Fresh Fruits and Vegetables Specific Commodity					
Commodity	**Weight**	**Count**	**Head or Bunch**	**Dry Measure (any size)**	**Dry Measure (1 dry qt or larger)**
Edible Tubers (Irish potatoes, ~~sweet potatoes,~~ ginger, horseradish, etc.)	X				X
Flower Vegetables (broccoli, cauliflower, Brussel sprouts, etc.)	X		X		
Gourd Vegetables (cucumbers, squash, melons, etc.)	X	X			X
Leaf Vegetables (lettuce, cabbage, celery, etc.)	X		X		
Leaf Vegetables (parsley, herbs, loose greens)	X		X	X	
Pitted Fruits (peaches, plums, prunes, etc.)	X	X			X
Pome Fruits (apples, pears, mangoes, etc.)	X	X			X
Root Vegetables (turnips, carrots, radishes, etc.)	X		X		

Background/Discussion:
This action would enhance the ability of retailers to market sweet potatoes and yams, while easing the checkout process, because individual sweet potatoes would be priced as sold "each". Consumers would be allowed to purchase specific sweet potatoes by the "each". This would provide them with a definitive price point which would enable them to monitor their spending at retail.

This change would allow the retailer to have another marketing tool to offer consumers while enhancing and increasing the sale of sweet potatoes. It would also assist the consumer in making healthy purchases according to their economic needs.

At the 2019 NCWM Interim Meeting all comments heard from regulators unanimously recommended the item be Withdrawn. The Committee also recommends the item be Withdrawn.

Regional Association Comments:
At the WWMA 2018 Annual Meeting, Ms. Lisa Warfield (NIST OWM) commented that she did not find evidence in historical documents on why sweet potatoes are not sold by count. She noted that a retailer selling smaller and larger sweet potatoes by count may not be equitable for the consumer. Additionally, changing sweet potatoes may lead to others wanting to sell by count (such as ginger, horseradish, Irish potatoes). She noted that she believes there was a lot of thought that went into these decisions in 2007. Mr. Kurt Floren (Los Angeles County, California) noted an objection to this proposal. Potatoes have long been mandated to be sold by weight in many states. Potatoes are different sizes and the change would not only affect retail, but also wholesale in which bags of potatoes would be sold by count. This would also create a conflict within the guidelines with sale of other edible tubers.

The Committee agrees with the commenters and believes this item should be Withdrawn because it would not allow for value comparison shopping between various edible tubers.

At the SWMA 2018 Annual Meeting, Ms. Lisa Warfield (NIST, OWM) provided background on this item and discouraged the adoption of sweet potatoes by count. There is variability with size in this type of product. In addition, if allowed to sell by each consideration should be given to other products within the chart. She also commented that this is just guidance and not a regulation. North Carolina is working on a regulation that would allow sweet potatoes

This publication is available free of charge from: https://doi.org/10.6028/NIST.SP.1253

to be sold by count within a specific grade. The Committee discussed this item at length and believes this will create an open door for other produce to have the same consideration. The Committee is recommending that this item be Withdrawn.

At the NEWMA 2018 Interim Meeting, Mr. Mike Sikula (New York) commented that rather than adding a new row for sweet potatoes and yams and make the only change to include sweet potatoes and yams by the each as well (put an "X" in that column). John McGuire (New Jersey) argued that selling by each does not allow for full information. Mr. Sikula commented that for the entire tenure of his time with weights and measures, all potatoes including sweet potatoes and yams have been sold by the each. Mr. Ethan Bogren (Westchester County, New York) commented that there is more variation with potatoes than with some other items sold by the each. After some discussion, the Committee determined the item as voting status with the recommended changes.

Method of Retail Sale for Fresh Fruits and Vegetables
Specific Commodity

Commodity	Weight	Count	Head or Bunch	Dry Measure (any size)	Dry Measure (1 dry qt or larger)
Artichokes	X	X			
Asparagus	X		X		
Avocados		X			
Bananas	X	X			
Beans (green, yellow, etc)	X				X
Brussels Sprouts (loose)	X				
Brussels Sprouts (on stalk)			X		
Cherries	X			X	X
Coconuts	X	X			
Corn on the Cob		X			X
Dates	X				
Eggplant	X	X			
Figs	X				
Grapes	X				
Melons (cut in pieces)	X				
Mushrooms (small)	X			X	X
Mushrooms (portobello, large)	X	X			
Okra	X				
Peas	X				X
Peppers (bell and other varieties	X	X			X
Pineapples	X	X			
Rhubarb	X		X		
~~**Sweet Potatoes/Yams**~~	~~**X**~~	~~**X**~~			~~**X**~~
Tomatoes (except cherry/grape)	X	X			X
Berries and Cherry/Grape Tomatoes	X			X	

This publication is available free of charge from: https://doi.org/10.6028/NIST.SP.1253

Method of Retail Sale for Fresh Fruits and Vegetables Specific Commodity					
Commodity	**Weight**	**Count**	**Head or Bunch**	**Dry Measure (any size)**	**Dry Measure (1 dry qt or larger)**
Citrus Fruits (oranges, grapefruits, lemons, etc)	X	X			X
Edible Bulbs (onions [spring or green], garlic, leeks, etc.)	X	X	X		X
Edible Tubers (Irish potatoes, **sweet potatoes**, ginger, horseradish, etc.)	X	**X**			X
Flower Vegetables (broccoli, cauliflower, Brussel sprouts, etc)	X		X		
Gourd Vegetables (cucumbers, squash, melons, etc.)	X	X			X
Leaf Vegetables (lettuce, cabbage, celery, etc.)	X		X		
Leaf Vegetables (parsley, herbs, loose greens)	X		X	X	
Pitted Fruits (peaches, plums, prunes, etc.)	X	X			X
Pome Fruits (apples, pears, mangoes, etc.)	X	X			X
Root Vegetables (turnips, carrots, radishes, etc.)	X		X		

At the CWMA 2018 Interim Meeting, Ms. Rachelle Miller (Wisconsin) commented that the proposal is confusing and believes it should be withdrawn. Mr. Loren Minnich (Kansas) commented that he does not believe this should move forward and all items should be sold by weight. Ivan Hankins (Iowa) does not support this item and believes the item should be withdrawn. Mr. Doug Musick (Kansas) commented that in considering online sales, the consumer has no choice which item to purchase, and a consumer has no opportunity for product comparison. Ms. Julie Quinn (Minnesota) commented that there may be a need to consider a proposal that addresses any item sold by count. Mr. Doug Rathbun (Illinois) commented that he does not understand the inconsistency of some items being sold individually and some by weight. Mr. Hankins commented that the best thing that has come out of this item is the realization that selling items individually is always arbitrary. Ms. Quinn commented that the item deserves further consideration but should not move forward as it exists. With the evolution of online sales and stores offering pick-up service, this issue needs further consideration. Ms. Lori Jacobson (South Dakota) commented that she agrees that online sales transaction changes the concept of selling items individually. Most comments heard in open hearings supported selling all items by weight. There was virtually no support for this item, so the Committee believes this item should be Withdrawn.

Additional letters, presentations, and data may have been part of the Committee's consideration and were posted on the NCWM website during the time this item was on the Committee's agenda. To the extent possible, comments and positions from such documents have been summarized in the committee's report along with comments heard during the Committee's hearings.

This publication is available free of charge from: https://doi.org/10.6028/NIST.SP.1253

This publication is available free of charge from: https://doi.org/10.6028/NIST.SP.1253

POL-2 D Section 2.6.XX. Methods of Sale for Packages of Consumer Commodities – Federal Trade Commission (FTC) and Acceptable Common or Usual Declarations for Packages of Food – Food and Drug Administration (FDA).

Source:
NIST OWM (2018)

Purpose:
Provide NIST Handbook130 users with easy access to tables to identify the method of sales prescribed by the Federal Trade Commission (FTC) for products subject to that agency's regulation and the acceptable common or usual declarations permitted to appear on packages of food by the Food and Drug Administration.

Item Under Consideration:
Amend NIST Handbook 130, NCWM Policy, Interpretations and Guidelines as follows:

NOTE: NIST/OWM is also requesting editorial privileges to add items as they receive confirmation from FDA as to what the acceptable common or usual declaration for a product is. NIST/OWM will then automatically update the handbook (chart) and list all changes to the Amendment chart located in the front HB130.

2.6.XX. Methods of Sale for Packages of Consumer Commodities – Federal Trade Commission (FTC) and Acceptable Common or Usual Declarations for Packages of Food – Food and Drug Administration (FDA).

The purpose of a method of sale requirement is to provide a uniform measurement unit for the sale of a commodity or product so that consumers can compare quantities and prices so that they can make informed purchasing decisions and value comparisons. Traditional methods of sale are established based on long-term usage of certain measurement units that are prevalent among an industry or trade group which have gained widespread acceptance and use by both sellers and consumers. The decision to adopt a traditional method of sale is based on the unit of measurement being traceable to national standards.

The following table is based in part on the 1978 Guide 7699.2 in the Food and Drug Administrations (FDA) "Fair Packaging and Labeling Manual" and other publications and guidance received from FDA in response to inquiries. The information the table is based on FDA's interpretation of Section 101.7 "Declaration of Net Quantity of Contents" in 21 CFR 101 – Food Labeling, Subpart A:

21 CFR 101.7 Declaration of net quantity of contents.

> **(a) The principal display panel of a food in package form shall bear a declaration of the net quantity of contents. This shall be expressed in the terms of weight, measure, numerical count, or a combination of numerical count and weight or measure.**
>
> **The statement shall be in terms of fluid measure if the food is liquid, or in terms of weight if the food is solid, semisolid, or viscous, (See *Note 1*) or a mixture of solid and liquid;**
>
> **Except that such statement may be in terms of dry measure if the food is a fresh fruit, fresh vegetable, or other dry commodity that is customarily sold by dry measure.**
>
> **If there is a firmly established general consumer usage and trade custom of declaring the contents of a liquid by weight, or a solid, semisolid, or viscous product by fluid measure, it may be used.**
>
> **Whenever the Commissioner determines that an existing practice of declaring net quantity of contents by weight, measure, numerical count, or a combination in the case of a specific packaged food does not facilitate value comparisons by consumers and offers opportunity for consumer confusion, he will by regulation designate the appropriate term or terms to be used for such commodity.**
>
> **…**

This publication is available free of charge from: https://doi.org/10.6028/NIST.SP.1253

(c) When the declaration of quantity of contents by numerical count does not give adequate information as to the quantity of food in the package, it shall be combined with such statement of weight, measure, or size of the individual units of the foods as will provide such information.

Note 1. **FDA has not defined a "viscous" liquid, but a general definition is that it is typically a liquid that has a thick (for example, some syrups have between 66 % to 74 % solids) or sticky consistency and which flows slowly when poured. Another identifying characteristic is that significant variations between two or more density measurements are frequently, but not always found in tests of viscous liquids.**

A product that is "concentrated or "semi-concentrated" (for example, "concentrated soup" typically has a high solids content and the instructions indicate that it is to be mixed with water or milk to "reconstitute" it) is typically treated as a "semi-solid" food.

Note 2. **When a note refers to "MOS" it means the Uniform Method of Sale of Commodities Regulation in Section IV of this handbook.**

Note 3. **When a note refers to "CPG" it means a FDA Compliance Policy Guideline at** www.fda.gov/Food/GuidanceRegulation/GuidanceDocumentsRegulatoryInformation/default.htm

Note 4. **When a note refers to "I &G" it means Section VI. NCWM Policy, Interpretations and Guidelines of this handbook.**

Note 5. **When a note refers to NBS HB 108 it means NBS Handbook 108 "Weights and Measures Labeling Handbook" (1971). This handbook was developed following the adoption of the Federal Fair Packaging and Labeling Act (FPLA) as an aid to facilitating agreement and uniformity between federal and state labeling regulations. Some of the information in handbook is obsolete because it was based on the original FPLA which was adopted in 1966. It has not been revised to reflect the 1992 amendments to FPLA is out-of-print. However, it but contains useful labeling information and many early precedent setting interpretations from both the Food and Drug Administration and the Federal Trade Commission. A PDF copy is available from the Office of Weights and Measures.**

Note 6. **The United States Department of Agriculture (USDA) Food Safety and Inspection Service (FSIS) has primary jurisdictional authority over meat and poultry labeling but some food products containing certain percentages of meat and poultry fall under FDA jurisdiction. For example, spaghetti sauces with less than 2 percent cooked meat, pork and beans, bagel dogs and gravy mixes are exempt from FSIS regulations but are under FDA jurisdiction (this is called an "amenability" determination). See USDA publication "A Guide to Federal Food Labeling Requirements for Meat, Poultry and Egg Products 2007 at** www.fsis.usda.gov/wps/wcm/connect/f4af7c74-2b9f-4484-bb16-fd8f9820012d/Labeling_Requirements_Guide.pdf?MOD=AJPERES

Table A. Acceptable Common or Usual Net Quantity of Contents Declarations on Packages of Food

Product	Acceptable Common or Usual Declaration	Notes
Abalone, Canned in Brine	Net Weight	§101.7 (a) a mixture of solid food and liquid must be sold by weight. See also Footnote 2. This food sold by net weight, because the brine was edible per FDA 7622 (Page I-52) in NBS HB 108.
Apples, Fresh	Dry Measure or Net Weight In addition, may also show min. size, range in size, and/or count	§101.7 (a) a solid food must be sold by weight or by dry measure per trade custom. See also I & G Section 2.3.2 "Fresh Fruits and Vegetables."

Anchovies (in salt)	**Weight of Fish**	**§101.7 (a) a solid food must be sold by weight.**
Apricots, canned	**Net Weight**	**§101.7 (a) a mixture of solid food and liquid must be sold by weight.**
Artichokes, canned	**Drained Weight**	**Must be sold by drained weight per FDA 7563 (Page I-20) in NBS Handbook 108. See also Footnotes 2 and 3.**
Asparagus, fresh	**Net Weight**	**§101.7 (a) a mixture of solid food and liquid must be sold by weight.**
Beans, fresh	**Dry Measure or Net Weight**	**§101.7 (a) a solid food must be sold by weight or by dry measure per trade custom. See also I & G, Section 2.3.2 "Fresh Fruits and Vegetables."**
Berries, small open containers	**No marking, Dry Measure on cellophane covered**	**See MOS §1.1.2. Methods of Sale where sales by net weight are also permitted. See also Footnote 1 and I & G, Section 2.3.2 "Fresh Fruits and Vegetables."**
Biscuits	**Net Weight and Count**	**§101.7 (a) a solid food must be sold by weight.**
Bloaters, smoked **(a Bloater is a whole, ungutted, cold-smoked herring.)**	**Net Weight of Fish**	**§101.7(a) a solid food must be sold by weight.**
Bread	**Net Weight**	**See also MOS, Section 1.2. Methods of Sale where sale by net weight is required.**
Broth, Beef and Chicken	**Net Weight**	**Beef and chicken broth labeling is regulated by the USDA and these products are included here for information. See Footnote 4 for method of sale information which is based on trade custom.**
Cabbage, fresh	**Dry Measure or Net Weight**	**§101.7 (a) a solid food must be sold by weight or by dry measure per trade custom. See also I & G Section 2.3.2 "Fresh Fruits and Vegetables."**
~~**Cake (decorations)**~~	~~**No markings**~~	
Cantaloupes, fresh	**Count**	**§101.7 (a) a solid food must be sold by weight, count or by dry measure per trade custom. See also I & G Section 2.3.2 "Fresh Fruits and Vegetables."**
Catsup (ketchup or catchup)	**Net Weight**	**§101.7(a) a viscous liquid must be sold by weight.**

This publication is available free of charge from: https://doi.org/10.6028/NIST.SP.1253

Celery, fresh	**Count**	**§101.7 (a) a solid food must be sold by weight, count or by dry measure per trade custom. See also I & G Section 2.3.2 "Fresh Fruits and Vegetables."**
Cereals	**Net Weight**	**§101.7 (a) a solid food must be sold by weight.**
Cheese (general)	**Net Weight**	**§101.7 (a) a solid food must be sold by weight.**
Cheese (limburger)	**Net Weight**	**§101.7 (a) a solid food must be sold by weight.**
Cherries, canned	**Net Weight**	**§101.7 (a) a mixture of solid food and liquid must be sold by weight.**
Cherries, maraschino	**Net Weight or Dry Measure, No. of rows and minimum size**	**§101.7 (a) a solid food must be sold by weight or by dry measure per trade custom. See also I & G Section 2.3.2 "Fresh Fruits and Vegetables."**
Chicken, canned	**Net Weight**	**Most chicken is regulated by the USDA and this product is included in this list for information only. See 9 CFR 381.121(c)(5) which requires solid foods or mixtures of solids and liquids to be sold by net weight.**
Citrus fruit (fresh)	**Dry Measure**	**§101.7 (a) a solid food must be sold by weight or by dry measure per trade custom. See also I & G Section 2.3.2 "Fresh Fruits and Vegetables."**
Chow-Chow **This is relish (typically made from chopped and chunks of green tomatoes (and sometimes red tomatoes), cabbage, mustard seed or powder, onions, hot peppers, sweet peppers, and vinegar.)**	**Net Weight**	**§101.7 (a) a mixture of solid food and liquid must be sold by weight.**
Citrus juices	**Fluid Measure**	**§101.7 (a) if a food is liquid it must be sold by fluid measure.**
Clams, canned	**Drained Weight**	**Sale by drained weight, required because liquid is typically discarded, per FDA 7563 and 7622 (Pages I-20 & I-52) in NBS Handbook 108. See also Footnotes 2 and 3.**
Cookies (cakes)	**Net Weight and Count**	**§101.7 (a) a solid food may be sold by weight or count and, because cookies vary in size and weight, count alone is not sufficient.**

This publication is available free of charge from: https://doi.org/10.6028/NIST.SP.1253

This publication is available free of charge from: https://doi.org/10.6028/NIST.SP.1253

Corn on Cob (canned)	**Count**	**See CPG Sec. 585.325 Corn on the Cob, Canned - Quantity of Contents Declaration. To satisfy the requirement of 21 CFR 101.105(a), the quantity of contents declaration on canned corn on the cob should be in terms of count (number of ears). FDA permits a declaration in terms of net weight to appear, but it is not required.**
Cottonseed meal	**Net Weight**	**§101.7 (a) a solid food must be sold by weight.**
Crabmeat, canned (dry)	**Net Weight**	**§101.7 (a) a solid food must be sold by weight.**
Crabmeat in brine	**Drained Weight**	**See Footnote 2.**
Crackers	**Net Weight**	**§101.7 (a) a solid food must be sold by weight.**
Cranberries	**Dry Measure (e.g., cranberry barrel) also Net Weight**	**§101.7 (a) a solid food must be sold by weight or by dry measure per trade custom. See also I & G Section 2.3.2 "Fresh Fruits and Vegetables."**
Dates	**Net Weight**	**§101.7 (a) a solid food must be sold by weight.**
Doughnuts (Donuts)	**Net Weight and Count**	**§101.7 (a) a solid food may be sold by weight or count and, because doughnuts vary in size and weight, count alone is not sufficient per FDA 7605 (Page I-42) in NBS HB 108.**
Fish, canned	**Net Weight**	**§101.7 (a) a solid food must be sold by weight.**
Fish, fresh	**No marking, Net Weight**	**§101.7 (a) a solid food must be sold by weight.**
Fish, frozen	**Net Weight, No marking**	**§101.7 (a) a solid food must be sold by weight.**
Fish, salted or smoked	**Net Weight and Count**	**§101.7 (a) a solid food must be sold by weight.**
Fruits, canned	**Net Weight**	**§101.7 (a) a mixture of solid food and liquid must be sold by weight.**
Fruits, fresh	**Dry Measure or Net Weight, also min size and/or count**	**§101.7 (a) a solid food must be sold by weight or by dry measure per trade custom. See also I & G Section 2.3.2 "Fresh Fruits and Vegetables."**
Fruit juices	**Fluid Volume**	**§ 101.7 (a) a liquid food must be sold by fluid measure.**
Grains, sacked	**Net Weight**	**§101.7 (a) a solid food must be sold by weight.**

Grapefruit, fresh	**Dry Measure, Size & Count, also Net Weight**	**§101.7 (a) a solid food must be sold by weight or by dry measure per trade custom. See also I & G Section 2.3.2 "Fresh Fruits and Vegetables."**
Grapes, fresh	**Net Weight & Dry Measure**	**§101.7 (a) a solid food must be sold by weight or by dry measure per trade custom. See also I & G Section 2.3.2 "Fresh Fruits and Vegetables."**
Greens, fresh	**Dry Measure & Net Weight, also No marking**	**§101.7 (a) a solid food must be sold by weight or by dry measure per trade custom. See also I & G Section 2.3.2 "Fresh Fruits and Vegetables."**
Gum	**Number of Sticks**	**Selling gum by number of sticks is a traditional method of declaring quantity per FDA 7613 (Page I-45) in NBS HB 108.**
Herring Roe	**Net Weight**	**§101.7 (a) a solid food must be sold by weight.**
Herring, spiced	**Drained Weight Herring, Total Weight Contents**	**See Footnotes 2 and 3.**
Honey, comb	**Net Weight**	**§101.7 (a) a solid food must be sold by weight.**
Honey, strained	**Net Weight**	**§101.7 (a) a viscous liquid must be sold by weight.**
Jelly	**Net Weight**	**§101.7 (a) a solid food must be sold by weight.**
Lemons, fresh	**Count & Average Diameter, also Dry Measure**	**§101.7 (a) a solid food must be sold by weight or by dry measure per trade custom. See also I & G Section 2.3.2 "Fresh Fruits and Vegetables."**
Lettuce	**Dozen Count & Dry Measure**	**See also I & G Section 2.3.2 "Fresh Fruits and Vegetables."**
Lobster, canned (dry)	**Net Weight**	**§101.7 (a) a solid food must be sold by weight.**
Lobster meat in brine (cooked)	**Drained Weight**	**Sales by drained weight, required because brine was discarded, per FDA 7563 and 7622 (Pages I-20 & I-52) in NBS Handbook 108. See also Footnotes 2 and 3.**
Margarine	**Net Weight**	**§101.7 (a) a solid food must be sold by weight. See also 21 U.S.C. Food, Drug and Cosmetic Act, §347 Intrastate Sales of Colored Oleomargarine.**
Mayonnaise	**Fluid Volume**	**See 21 CFR 169.140 Mayonnaise - defined is a semisolid food which must be sold by weight but, it is trade custom to sell this food by fluid volume.**

This publication is available free of charge from: https://doi.org/10.6028/NIST.SP.1253

Meats	**Net Weight**	**Most meat is regulated by USDA and is provided here for information. See 9 CFR 317.2 (h) which requires solid foods to be sold by net weight.**
	Net Weight	**FDA Response: Microgreens Received: November 4, 2014 - FDA confirmed that a solid food product should be sold by weight. This was in response to an OWM inquiry via email.**
Milk, sweetened, condensed	**Net Weight**	**§101.7 (a) a solid food must be sold by weight.**
Milk, evaporated	**Fluid Volume (Net Weight, may be declared on side panel (s))**	**§101.7 (a) a liquid must be sold by fluid volume.**
Molasses	**Net Weight and/or Fluid Volume**	**§101.7 (a) a viscous liquid must be sold by weight, but it is trade custom to sell molasses by fluid volume.**
Mushrooms, fresh	**Net Weight**	**§101.7 (a) a solid food must be sold by weight.**
Mushrooms, canned	**Drained Weight**	**See 21 CFR 155.201, Subpart B Canned Mushrooms. See Footnotes 2 & 3.**
Mussels (canned)	**Drained Weight**	**See also MOS Section 1.5.2.5. Canned (heat processed) Mussels, Clams, Oysters, or Other Mollusks which requires these products be sold by weight.**
Mustard, Prepared	**Net Weight**	**§101.7 (a) a viscous liquid must be sold by weight.**
Oil, salad, olive	**Fluid Volume**	**§101.7 (a) a liquid must be sold by fluid volume.**
Olives, green (in brine)	**Drained Weight**	**See Footnotes 2 and 3.**
Olives, ripe	**Drained Weight**	**See Footnotes 2 and 3.**
Oranges	**Dry Measure & Count, also Net Weight & Size**	**§101.7 (a) a solid food must be sold by weight or by dry measure per trade custom.**
Oysters, fresh	**Fluid Volume**	**See also MOS Section 1.5.2.3. Canned (heat processed) Mussels, Clams, Oysters, or Other Mollusks which allows these products to be sold by weight, drained weight or fluid volume.**
Oysters, canned	**~~Drained Weight~~ Net Weight**	**See also MOS Section 1.5.2.5. Canned (heat processed) Mussels, Clams, Oysters, or Other Mollusks which requires these products be sold by**

This publication is available free of charge from: https://doi.org/10.6028/NIST.SP.1253

		weight and includes a limit on free liquid.
Peaches, canned	Net Weight	§101.7 (a) a solid food must be sold by weight.
Peaches, fresh	Dry Measure, Min. Diameter, also Net Weight & Count	§101.7 (a) a solid food must be sold by weight or by dry measure per custom.
Peanut, butter	Net Weight	§101.7 (a) a solid food must be sold by weight.
Pears, canned	Net Weight	§101.7 (a) a solid food must be sold by weight.
Peas, canned	Net Weight	§101.7 (a) a solid food must be sold by weight.
Pickles	Fluid Volume, (see 21 CFR 101.7 (r) which permits sales of one or two whole pickles in clear plastic bags by count.)	See also MOS Section 1.8. Pickles which permits sales of one or two whole pickles in clear plastic bags by count.
Pineapple, fresh	Count	§101.7 (a) a solid food may be sold by count. See also I & G Section 2.3.2 "Fresh Fruits and Vegetables."
Plums, prunes, fresh	Net Weight or Dry Measure, Count & Size denoted by rows in top layer	§101.7 (a) a solid food must be sold by weight or by dry measure per trade custom. See also I & G Section 2.3.2 "Fresh Fruits and Vegetables."
Potatoes, fresh	Net Weight or Dry Measure	§101.7 (a) a solid food must be sold by weight or by dry measure per trade custom. See also I & G Section 2.3.2 "Fresh Fruits and Vegetables."
Rabbits, dressed	Net Weight	§101.7 (a) a solid food must be sold by weight.
Rolls and Buns	Net Weight and Count	§101.7 (a) a solid food may be sold by weight or count but, because rolls and buns vary in size and weight, count alone is not sufficient per FDA 7605 (Page I-42) in NBS HB 108.
Relish (e.g. bell pepper relish, green pepper relish)	Net Weight	For pickle relish: see 21 CFR 101.7 (r) the declaration of net quantity of contents on pickles and pickle products, including relishes … shall be expressed in terms of the U.S. gallon of 231 cubic inches and quart, pint, and fluid ounce. subdivisions thereof.
Rock Lobster, canned (dry)	Net Weight	§101.7 (a) a solid food must be sold by weight.
Roe, herring	Net Weight	§101.7 (a) a solid food must be sold by weight.

This publication is available free of charge from: https://doi.org/10.6028/NIST.SP.1253

Salad dressing	**Fluid Volume**	**See 21 CFR 169.150 Salad Dressing - defined as a semisolid food it is trade custom to sell by fluid volume.**
Salmon, canned	**Net Weight**	**§101.7 (a) a solid food must be sold by weight.**
Sardines, canned	**Net Weight**	**§101.7 (a) a solid food must be sold by weight.**
Sauces	**When the sauce is a free-flowing liquid (e.g., "Hot Sauce or "Worcestershire Sauce") it must be sold by fluid volume.** **When the sauce is a viscous or slow flowing liquid or a mixture of solids and liquids it must be sold by net weight (e.g., "Chili Sauce," "Cocktail Sauce," "Tomato Sauce," "Spaghetti Sauce").**	**§101.7 (a) a liquid must be sold by fluid volume.** **§101.7 (a) a viscous liquid or mixture of solids and liquid must be sold by weight.**
Sauerkraut, (unprocessed in glass)	**Fluid Volume**	**§101.7 a mixture of solids and liquid it is trade custom to sell this food by fluid volume.**
Shrimp, canned (wet)	**Drained Weight**	**Sales by drained weight per FDA 7563 (Page I-20) in NBS Handbook 108. See also Footnotes 2 and 3.**
Shrimp, canned (dry)	**Net Weight**	**§101.7 (a) a solid food must be sold by weight.**
Syrup	**Fluid Volume or Net Weight**	**§101.7 (a) a viscous liquid must be sold by weight.**
Soups, canned (liquid single strength)	**Fluid Volume**	**§101.7 (a) a food that is liquid or a mixture of solids and liquid must be sold by fluid measure.** **NOTE: soups which contain meat and poultry are subject to the regulations of the USDA and packages bear a seal of inspection by that agency. For method of sale labeling See 9 CFR 317.2 for meat products and §381.121 for poultry products**
Soups, canned (condensed & semi-condensed)	**Net Weight**	**§101.7 (a) a semi-solid food must be sold by weight.**
Tea	**Net Weight**	**§101.7 (a) a solid food must be sold by weight.**
Tea bags	**Net Weight & Count**	**§101.7 (a) a solid food must be sold by weight or count but, count alone is not sufficient for this food.**

This publication is available free of charge from: https://doi.org/10.6028/NIST.SP.1253

Toddler Food (e.g., ravioli and vegetables in a single tray.)	**Net Weight**	**FDA Response Received: September 20, 2017 - A food entree for toddlers (comprised of ravioli and peas and carrots) included a drained weight declaration for the vegetables. FDA was contacted by email and responded to OWM that the quantity of the vegetables should be declared by net weight and not drained weight. See Footnote 5.**
Tomatoes, canned	**Net Weight**	**§101.7 a mixture of solids and liquids must be sold by weight.**
Tomatoes, fresh	**Net Weight or Dry Measure, Size denoted by Rows in top layer**	**§101.7 (a) a solid food must be sold by weight or by dry measure per trade custom.**
Tuna fish, canned	**Net Weight or, Drained Weight***	***Several packers have permission to temporarily label by drained weight. See page 35362 Federal Register / Vol. 79, No. 119 / Friday, June 20, 2014 / Notices – "FDA - Canned Tuna Deviating from Identity Standard;"**
Vegetables, canned	**Net Weight**	**§101.7 (a) a mixture of solids and liquids must be sold by weight.**
Vegetables, fresh	**Dry Measure or Net Weight, also Count**	**§101.7 (a) a solid food must be sold by weight or by dry measure per trade custom.**
Water, infused (e.g., with pieces of fruit or vegetables)	**Fluid Volume**	**FDA Response Received: May 24, 2017 - OWM received an inquiry about containers of water sold at retail with pieces of watermelon, asparagus and mint to infuse flavor. FDA was contacted by email and responded that these products should be sold by fluid measure. See Footnote 5.**
Yogurt, drinkable/pourable	**Fluid Volume**	**FDA Response Received: May 24, 2017 - OWM received an inquiry about the appropriate method of sale for containers of pourable yogurt and smoothies. FDA was contacted by email and responded that these products should be sold by fluid measure. See Footnote 5.**
This compilation will be revised from time to time as may be required by changes in consumer understanding, administrative opinion, or court decisions.		

This publication is available free of charge from: https://doi.org/10.6028/NIST.SP.1253

This publication is available free of charge from: https://doi.org/10.6028/NIST.SP.1253

Footnotes

Footnote 1. See also Subpart G—Exemptions from Food Labeling Requirements –21 CFR 101.100 Food; exemptions from labeling. (c) An open container (a container of rigid or semi-rigid construction, which is not closed by lid, wrapper, or otherwise other than by an uncolored transparent wrapper which does not obscure the contents) of a fresh fruit or fresh vegetable, the quantity of contents of which is not more than 1 dry quart, shall be exempt from the labeling requirements of sections 403(e), (g)(2) (with respect to the name of the food specified in the definition and standard), and (i)(1) of the act; but such exemption shall be on the condition that if two or more such containers are enclosed in a crate or other shipping package, such crate or package shall bear labeling showing the number of such containers enclosed therein and the quantity of the contents of each.

Footnote 2. Drained Weight – When required.

For decades, on a case-by-case basis, under both the Federal Food Drug and Cosmetic Act (FD&C) and the Fair Packaging and Labeling Act (FPLA) FDA has advised firms that the net contents declaration should include the packing medium if it is generally consumed as part of the food. Conversely, where solid foods are packed in a salt brine or other medium that is always, or almost always, discarded before serving, the agency has expected that the label would disclose the drained weight.

Alternative Language from 1997 Proposed Rule on Net Contents

The Food and Drug Administration requires the net quantity of contents to be declared in terms of drained weight when the reference amount in 21 CFR 101.12 is declared in terms of drained solids.

See Footnote 10 in 21 CFR 101.12 "Reference Amounts Customarily Consumed Per Eating Occasion."

> **[10]If packed or canned in liquid, the reference amount is for the drained solids, except for products in which both the solids and liquids are customarily consumed (*e.g.*, canned chopped clam in juice).**

History and Background: FDA's policy on when drained weight labeling is required was described in a proposed rule on page 9833 in the Federal Register / Vol. 62, No. 42 / Tuesday, March 4, 1997. The proposed net content regulation was later withdrawn but the policy on drained weight proposed for §101.200 reflected the agency's official approach in providing the food industry labeling guidance.

4. Mass or Weight of the Packing Medium

"Section 101.105 (now Section 101.7) does not address when net contents declarations that are expressed in terms of mass or weight are to be declared as the mass or weight of the contents without the packing medium, which is commonly referred to as the ''drained mass or weight'' or the ''drained solids.'' The agency tentatively concludes that new § 101.200 should address this matter. For many years, FDA has advised firms that the net contents declaration should include the packing medium if it is generally consumed as part of the food. Conversely, where solid foods are packed in a salt brine or other medium that is always, or almost always, discarded before serving, the agency has expected that the label would disclose the drained weight. For example, FDA's Fair Packaging and Labeling Manual Guide 7699.2 states that the appropriate net contents declarations for canned artichokes, canned clams, canned mushrooms, green olives in brine, and canned wet-pack shrimp are in terms of drained weight. However, the agency's case-by-case approach to determining when a packing medium is always or almost always discarded before serving would be difficult to implement uniformly if many different regulatory agencies are making such assessments. The congressional mandate for national uniformity suggests that FDA should provide more specific direction in this matter. FDA notes that it has already dealt with the issue of when a food should be declared in terms of its drained weight in its regulation on serving sizes (§ 101.12). The agency's nutrition labeling requirements provide for declaration of nutrient information in terms of the serving size based on the reference amounts customarily consumed as set forth in § 101.12, and that section specifically provides

for cases where the reference amounts are in terms of drained solids. Thus, FDA no longer has to make case-by-case assessments about whether the packing medium is always or almost always discarded before serving. Instead, the agency can now refer to § 101.12 in determining whether net contents declarations must include the packing medium. Therefore, FDA is proposing to require in § 101.200(a) that, except where the reference amount customarily consumed per eating occasion is in terms of drained solids in accordance with § 101.12, a food that is packed or canned in liquid, and that is required to bear a net contents declaration in terms of weight, shall bear a declaration expressed in terms of the total net contents including the liquid."

Here is the relevant text of the proposed §101.200 that can be used in making determinizations of whether or not a product should be labeled with drained weight:

§ 101.200 Declaration of net quantity of contents.

"(a) The principal display panel of a food in package form shall bear a declaration of the net quantity of contents… Except as provided for in § 101.12, a food that is packed or canned in liquid, and is required to bear a contents declaration in terms of weight, shall bear a declaration expressed in terms of the total net contents including the liquids. Where the reference amount in § 101.12 is declared in terms of drained solids, the contents declaration shall be in terms of drained weight…."

Footnote 3: Net Weight and Drained Weight Declarations May Appear on Package Labels.

This interpretation by the Food and Drug Administration (FDA) appears on page 9856 in the Federal Register / Vol. 62, No. 42 / Tuesday, March 4, 1997 / Proposed Rules.

"FDA points out that, for many years, it has had a policy of permitting both drained weight and net weight to be stated on the principal display panel (PDP) of a food label. However, some State regulatory agencies prohibit both drained weight and net weight from appearing on the PDP of a label because they consider one of the weight declarations to be in conflict with section 4(b) of the Fair Packaging and Labeling Act (FPLA), which prohibits qualifying words or phrases from appearing with the required net contents declaration. FDA advises that it does not believe that its policy in this regard conflicts in any way with section 4(b) of the FPLA. Although neither the language of the FPLA nor the regulations established thereunder provide clear guidance, the legislative history of the FPLA does. The May 25, 1966, Senate Report No. 1186, which addressed the meaning of the prohibition of supplemental statements, states:

> **"Subsection 4(b) prohibits the qualification of the separate net quantity statement by any modifying words or phrases. However, a supplemental statement of the net quantity of contents set apart from the separate net quantity of contents, required by the bill, may be modified by nondeceptive words or phrases, so long as such words or phrases do not tend to exaggerate the amount of the commodity contained in the package. For example, where a package contains a separate net quantity statement in conformity with promulgated regulations, such as ''6 oz. net weight,'' the package could also contain in a supplemental statement, apart from the required net quantity statement, the phrase ''6 oz. of fast acting X detergent'' but could not contain the statement ''6 jumbo oz. of X detergent'' at any place on the package* * *."**

From the above quote, it is obvious that the required declaration of net quantity may not contain statements designed to imply that one product is different in quantity from others declaring the same net contents. It is also obvious that Congress wanted the required declaration to be separate from supplemental statements designed to promote product sales. FDA has a regulation, § 101.105(o) (which would be re-designated as § 101.200(o)), that is intended to ensure that such separation exists by permitting supplementary net quantity statements on label panels other than the PDP. However, there is no indication in Senate Report No. 1186, or elsewhere in the legislative history of the FPLA, that congressional concern about a ''supplementary statement'' was intended to encompass other forms of nonmisleading information about the quantity of contents than the one required. To the contrary, the broad congressional policy declared in section 2 of the FPLA states:

This publication is available free of charge from: https://doi.org/10.6028/NIST.SP.1253

This publication is available free of charge from: https://doi.org/10.6028/NIST.SP.1253

''Packages and labels should enable consumers to obtain accurate information as to the quantity of the contents and should facilitate value comparisons'' (15 U.S.C. 1451). Declaration of a statement of net quantity of contents in terms of both drained weight and net weight would not be inconsistent with this policy because such declarations advise consumers of the amount of food and the accompanying packing medium, thereby assisting purchasing decisions. Although the agency does not consider it necessary to codify the present policy of permitting both drained weight and net weight to be declared on the PDP of a food label, FDA solicits comments on whether it should codify this policy into its regulations.

Footnote 4. In a June 3, 1998 letter to Campbell Soup Company from the USDA, Food Safety and Inspection Service (FSIS), Office of Policy Program Development and Evaluation the trade custom of labeling the net quantity of contents of packages of beef and chicken broth by net weight instead fluid measure was recognized. A copy of the letter is available from the NIST Office of Weights and Measures at 301-975-4004 or owm@nist.gov**.**

Table B. Method of Sale – Federal Trade Commission

The Net Quantity Declaration designated in this chart is that one used on the most common form of packaging for each commodity. If the product is packaged in multiple units or with other commodities, see "Multi-Unit Package," "Variety Package," or "Combination Package," as appropriate. As noted below the Uniform Regulation for the Method of Sale of Commodities (UMSCR) also includes methods of sale for several products or commodities. Additional detail on labeling requirements is also contained in the Uniform Packaging and Labeling Regulation (UPLR).

Product or Commodity	Net Quantity of Contents Declaration
Aerosol Containers	Net Weight (See also Section 10.3 "Aerosols and Other Pre-Pressurized Containers Dispensing Product under Pressure" in the UPLR).
Air Freshener	
Aerosol	Net Weight
Liquid	Fluid Measure
Cake	Net Weight
Aluminum Foil	
Cooking & Bakeware	Count and inside dimensions (length, width, and depth, or diameter and depth). Depth of less than 5 cm (2 in) and capacity are optional. (See also Section 10.8. Measurement of Container-Type Commodities – How Expressed in the UPLR).
Wrap	*See Food Wraps*
Bags	
Garbage, Trash, Food Storage, Leaf, Lunch, etc.	Count and dimensions (width and length for non-gusseted; width, depth, and length for gusseted). Capacity is optional. (See also Section 2.13. "Polyethylene" in the UMSCR).
Vacuum Cleaner, Disposable	Count. (Make and model of vacuum for which intended, and name and place of business must appear on the principal display panel.)

Bathmats, paper	**Count and dimensions (length and width in millimeters or centimeters and inches).**
Bathroom Tissue	**Total square meters and square feet, number of rolls (if more than one), number of tissues per roll, ply, plus length and width of each tissue in centimeters and inches.**
Batteries, Household	**Count. (Voltage and/or size are factors of identity, *not* quantity.)**
Bed Sheet, Paper	**Dimensions (length and width of finished item in millimeters or centimeters and inches).**
Bowls (Paper Foil, Plastic, etc.)	**Count and dimensions. (Depth and diameter (outer top rim) in inches.) Depth of less than 5 cm (2 in) and capacity are optional.**
Boxes, Food Storage	**Count and dimensions (length, width and depth). Capacity is optional. (See also Section 10.8. Measurement of Container-Type Commodities – How Expressed in the UPLR).**
Bulb, Light	**Count, if more than one. Voltage, wattage, lumens, size, etc., are factors of identity, *not* quantity.**
Butane Fuel	**Net Weight**
Calking Compounds	**Fluid Measure**
Candle	
Uniform Width or Diameter	**Dimensions (length and diameter or width, in millimeters or centimeters and inches).**
Tapered or irregularly shaped figures, numbers, etc.	**Length or height in millimeters or centimeters and inches. (diameter need not be expressed – See also 16 CFR 501.7)**
Chamois	
Full Skin (shape of the animal)	**Total square meters and square feet**
Cut Skin (Square, Rectangular, or Pocket)	**Total square meters and square inches, followed in parentheses by square feet if more than one square foot.**
Charcoal Briquets	**Net Weight**
Christmas Decorations	
Balls	***See Ornaments***
Bulbs	***See Bulb, Light***
Garlands	***See Garlands***
Icicles or Tinsel	**Count, plus length of strands**
Ornaments	***See Ornaments***
Cigarette Paper	**Count**
Cleaning Compound	
Liquid	**Fluid Measure**

This publication is available free of charge from: https://doi.org/10.6028/NIST.SP.1253

Powder, Cake, or Paste	**Net Weight**
Clothesline	***See Cordage***
Combination Package	**Count, weight volume, dimensions, or a combination thereof, for each commodity included. (See also Section 10.5. "Combination Packages" in the UPLR.**
Cooking and Bakeware Containers (Foil and Paper	***See Aluminum Foil***
Cordage	**Length in meters and feet (followed in parentheses by length in yards). Ply and diameter are optional. (Breaking strength and size designation are elements of identity.)**
Cups	
Drinking	**Count, plus fluid capacity (See also Section 10.8.3 Terms in the UPLR regarding the optional use of terms such as "fluid" with the capacity declaration.)**
Nut and Party	**Count, plus dimensions (top outside diameter, or length and width). Capacity is optional.**
Cooking and Baking (Foil or Paper)	**Count and inside dimensions (diameter and depth). Depth of less than 5 cm (2 in) and capacity are optional.**
Deodorizer	
Aerosol	**Net Weight**
Liquid	**Fluid Measure**
Cake	**Net Weight**
Detergent	
Liquid	**Fluid Measure**
Powder, Cake, or Granular	**Net Weight**
Diapers, Disposable	**Count and dimensions (length and width in millimeters or centimeters and inches). Dimensions may be omitted if diaper is in permanent pre-fold or form-fitted shape.**
Distilled Water	**Fluid Measure**
Doilies, Paper	**Count, plus dimensions (length and width, or diameter in millimeters or centimeters or inches).**
Drop Cloth (Plastic)	**Total square meters and square feet, plus length and width in the largest whole unit measurements.**
Dyes and Tints (Household)	
Powder	**Net Weight**
Liquid	**Fluid Measure**
Emory Cloth (Paper	***See Sandpaper***
Eyeglass Tissue	**Count**

This publication is available free of charge from: https://doi.org/10.6028/NIST.SP.1253

Facial Tissue	**Count, ply, plus length and width of each tissue in millimeters or centimeters and inches.**
Film	
Bulk or Movie	**(See also Section 11.22. "Camera Film, Recording Tape, Audio Recording Tape and Other Image and Audio Recording Media Intended for Retail Sale and Consumer Use" in the UPLR).** **Number of meters or feet of usable film only.**
Still	**Number of exposures. Length and width of individual exposures in millimeters and inches are optional.**
Filters, Coffee	**Count and dimensions (length and width, or diameter).**
Fireplace Wood (See Section 2.4 in UMSCR)	
Cord Wood (Packaged)	**Cubic feet and liters (See 2.4. "Fireplace and Stove Wood" in the UMSCR.)**
Compressed Log	**Net Weight**
Flints, Lighter	**Count**
Food Storage	
Bags	***See Bags***
Boxes	***See Boxes, Food Storage***
Food Wrap (Plastic, Paper, Foil, etc.) (See Section 6.9. "Bi-dimensional Commodities" in the UPLR).	**Total square meters and square feet, plus length and width in largest whole measurement. (See also Section 6.9. Bi-Dimensional Commodities in the UPLR.)**
Fuses, Household	**Count (if more than one). Amperage, type, voltage, size, etc., are factors of identity, *not* net quantity.**
Garden Bags	***See Bags***
Garlands	**Length in meters and feet (followed in parentheses by yards). Ply and/or width in inches are optional.**
Glasses, Disposable	**Count, plus fluid capacity of each glass.**
Glue	
Liquid	**Fluid Measure**
Powdered	**Net Weight**
Grease, Household	***See Lubricants, Household***
Incense	**Count**
Laundry Supplies	
Liquid	**Fluid Measure**
Aerosol	**Net Weight**
Powder or Solid	**Net Weight**
Leaf Bags	***See Bags***

This publication is available free of charge from: https://doi.org/10.6028/NIST.SP.1253

Light Bulbs	***See Bulbs, Light***
Lighter Fuel	
Non-pressurized	**Fluid Measure**
Pressurized (e.g., Butane)	**Net Weight**
Logs, Compressed	***See Fireplace Wood***
Lubricants, Household	
Liquid (Oil)	**Fluid Measure**
Powder, Paste, Solid, Semi-Solid, etc.	**Net Weight**
Lunch Bag	***See Bags***
Matches	
Wooden (Kitchen, Fireplace, etc.)	**Count plus length if they are extra-long intended for fireplace use, etc.**
Book-Matches (By the Box)	**Count (number of books, number of matches per book, total number of matches).**
Mucilage	**Fluid Measure**
Multi-Unit Package	**Count, plus weight, measure, or volume for each unit, followed by the total weight, measure, or volume, as appropriate. (See also Section 10.4. "Multiunit Packages" in the UPLR.**
Napkins, Paper	**Count, ply, plus length and width of each napkin in inches.**
Oil, Household	***See Lubricants, Household***
Ornaments, Christmas	**Opaque package – count and dimensions. Count only, if ornaments are clearly visible to retail purchaser at time of purchase. (See 16 C.F.R. 501.2)**
Paper: Crepe, Shelf, or Wrapping (Not Gift Wrap)	**Total square area, plus length and width in largest whole measurements.**
Paper Streamers	***See Tape***
Paste, Household	**Fluid Measure**
Patching Plaster	**Net Weight**
Pillow Case, Paper	**Dimensions (length and width of finished item in centimeters and inches only).**
Pipe Cleaners	**Count. Length for cleaners shorter or longer than the standard 152.4 mm (6 inches).**
Place Mats, Paper	**Count and dimensions (length and width in centimeters and inches only).**
Plastic Food Wrap	***See Food Wraps***
Plates, Disposable	**Count and outside dimensions (length and width or diameter, in centimeters and inches).**
Polish Cloth, Impregnated	**Dimensions (total square area plus length and width in the largest whole measurements).**

This publication is available free of charge from: https://doi.org/10.6028/NIST.SP.1253

Polish	
Liquid	**Fluid Measures**
Aerosol	**Net Weight**
Powder, Granule, Cake, or paste	**Net Weight**
Propane Fuel	**Net Weight**
Rope, Household	***See Cordage***
Rubber Bands	**Net Weight**
Sandpaper (Fine, Medium, or Coarse, Grit, Etc.)	
One Grit Only (Fine, Medium or Coarse)	**Count and dimensions of each sheet (length and width in centimeters and inches).**
Assorted Grits	
a.Sheet Count for Each Type of Grit is Constant.	**Count of sheets per each type of grit, dimensions of each sheet (length and width in centimeters and inches), plus total sheet count.**
b.Total Sheet Count is Constant, but Sheet Count for Each Type of Grit Varies from Package to Package.	**Count and dimensions of each sheet (length and width in centimeters and inches). Identity must include term, "Assorted Miscellaneous Grits."**
Scouring Pads	
Steel Wool, Metal Coil, Plastic, Etc.	**Count plus dimensions (length, width and depth in centimeters and inches) for rectangular or square shaped pads.**
Soap	
Powder, Flake, Chip, Poufs, Cake, Ball, etc.	**Net Weight**
Liquid	**Fluid Measure**
Solder	**Net Weight in only. Percentage of composition, diameter, and core size are factors of identity *not* quantity.** **For Solder containing precious metals see 16 C.F.R. § 501.8 "Solder." Solder and brazing alloys containing precious metals when packaged and labeled for retail sale are exempt from the net quantity statement requirements of part 500 of this chapter which specify that all statements of weight shall be in terms of avoirdupois pound and ounce provided the net quantity declaration is stated in terms of the troy pound and ounce and the term troy is used in each declaration.**
Solder Flux	
Liquid	**Fluid Measure**
Paste	**Net Weight**

This publication is available free of charge from: https://doi.org/10.6028/NIST.SP.1253

Spackling Compound	**Net Weight**
Sponge (Cellulose, Rubber, etc.)	
Standard Shapes	**Dimensions (length, width and thickness or diameter and thickness, in centimeters and inches).**
Irregular Dimensions	**Count, followed by the phrase "Irregular dimensions."**
Steel Wool, for finishing and polishing pads	**Count. Total net weight is optional.**
Straws, Drinking	**Count and length. Inside diameter is optional.**
String	***See Cordage***
Table Cover, Paper	**Dimensions (length and width in centimeters and inches).**
Tableware (Plastic Cutlery)	**Count (also see Variety Package)**
Tape	**Dimensions (width in centimeters and inches followed by length in largest whole measurement (e.g., meters and yards.)**
Tissue	***See Bathroom Tissue and Facial Tissue***
Toothpicks	**Count**
Towels, Paper	
Roll	**Total square meters and square feet, roll count (if more than one), number of towels per roll, ply, length and width of individual towels in centimeters and inches.**
Single	**Dimensions (length and width in centimeters and inches.)**
Trash Bags	***See Bags***
Twine	***See Cordage***
Vacuum Cleaner Bags	***See Bags***
Variety Package	**Weight, volume, measure and count, as appropriate, for each identical commodity, followed by total statement of quantity, as appropriate. (See also Section 10.6. "Variety Packages" in the UPLR.)**
Water, Distilled	**Fluid Measure**
Wax Paper	***See Food Wraps***
Wax	
Liquid	**Fluid Measure**
Aerosol	**Net Weight**
Paste, Cake, and Powder	**Net Weight**

This publication is available free of charge from: https://doi.org/10.6028/NIST.SP.1253

This publication is available free of charge from: https://doi.org/10.6028/NIST.SP.1253

Background/Discussion:
This item has been assigned to the submitter for further development. For more information or to provide comment, please contact:

Ms. Lisa Warfield
NIST, Office of Weights and Measures
(301) 975-3308, **lisa.warfield@nist.gov**

This proposal is to provide NIST Handbook 130 users with easy access to tables to identify the method of sales prescribed by the Federal Trade Commission (FTC) for products subject to that agency's regulation and the acceptable common or usual declarations permitted to appear on packages of food by the Food and Drug Administration (FDA). Much of this information has been published by FDA and FTC in out of print publications and by NIST (previously known as NBS) in its training materials since the 1970s. The information is used by the Office of Weights and Measures in both training and daily to respond to inquiries from both weights and measures officials and industry about how products are to be sold and labeled. The tables have been revised to add current FTC labeling requirements which include requirements for metric units and additional common and usual declarations for commodities that FDA has issued in recent years in response to specific inquiries from OWM that submitted to FDA to assist packers and weights and measures officials. The FDA information is based on Guide 7699.2 in the Food and Drug Administrations "Fair Packaging and Labeling Manual" (June 1978) and other FDA guidance.

This information is useful to both packers and inspectors when determining how packages should be labeled and offered for sale. It has been available for many years in out of print publications and should be made widely available through this handbook.

NIST/OWM is also requesting editorial privileges to add items as they receive confirmation from FDA as to what the acceptable common or usual declaration for a product is. NIST/OWM will then automatically update the handbook (chart) and list all changes to the Amendment chart located in the front NIST HB130.

At the 2018 NCWM Interim Meeting written comment was received from Ms. Ann Boeckman (Kraft Heinz) recommending this be a Developing item. Ms. Boeckman wants the listing to be reviewed to ensure it is consistent with current established practices and legal standards. In addition, she requests a review of the listing for consistency, clarity and appropriate use of factual product descriptors. Chris Guay (P&G) questioned why particular products were chosen in Table A and stated it would be helpful if there was and additional column in Table B, Section 2.6.XX. containing notes. Mr. Kurt Floren (Los Angeles County, California) commented that there are products listed that conflict with NIST HB130, Method of Sale and Labeling Requirements as well as routine practices in the marketplace. (Examples include citrus, cabbage, fresh asparagus, and berries). Berries specify no marking or dry measure while Section 1.1.2. Methods of Sale specify either weight or volume. Due to the discrepancies pointed out in the comments received, the L&R Committee recommends this be a Developing item.

At the 2018 NCWM Annual Meeting, Ms. Boeckman (Kraft Heinz) supports the work. This is based on guidance from the 1970's and it is important to have a process to maintain the information. Mr. Guay supports the development of this as a reference document. Mr. Floren concurs with the develops of this item but remarked that if updating it, there should not be conflict with existing regulations. An example of this would be the proposal has berries as having no marking or dry measure but the NIST Handbook 130 method of sale is weight or volume for this product.

At the 2019 NCWM Interim Meeting, Mr. Floren (Los Angeles, California) and Mr. Guay (P&G) commented that they want to ensure that the table is accurate. One example Mr. Floren pointed out is citrus fruit does not align with the NIST Handbook 130 Method of Sale. Regulators, industry members, and the regional opinions all recommend this item remain developing. The submitter, NIST OWM was not in attendance due to a government furlough, so concerns could not be addressed. The Committee recommends this item remain Developing.

At the 2019 NCWM Annual Meeting Ms. Warfield (NIST OWM) remarked that a revision that clarifies any issues that have been raised at the regions and conference will appear in the 2019 Fall reports.

This publication is available free of charge from: https://doi.org/10.6028/NIST.SP.1253

Regional Association Comments:
At the WWMA 2018 Annual Meeting, Ms. Lisa Warfield (NIST OWM) commented that there are documented conflicts with this proposal that have not yet been addressed. She recommends the item remain developing. She is working with Heinz-Kraft and hopes to have clarified the proposal by January 2019 NCWM Interim meeting. There were no other comments regarding the item. The Committee recommends this as a Developing Item.

At the SWMA 2018 Annual Meeting, the submitter, Ms. Warfield (NIST OWM) remarked that she is currently working on this item and hopes to have modified language submitted by the 2019 NCWM Interim Meeting.

At the NEWMA 2018 Interim Meeting, there were no comments during open hearings and the Committee recommended that this item remain Developing. At the 2019 NEWMA Annual Meeting, Ms. Warfield (NIST Technical Advisor) commented that the language in this item is taken directly from the Fair Packaging and Labeling (FPLA) Manual. She also commented that citrus was previously removed in an earlier edition from NIST Handbook 130, Interpretations and Guidelines, so there are no conflicts between the NIST Handbook 130 language and the FPLA. The Committee recommends the item is fully developed and should be moved forward as a Voting item.

At the CWMA 2018 Interim Meeting, Ms. Julie Quinn (Minnesota) commented that this item only applies to packages. Mr. Chris Guay (Procter and Gamble) commented that he is supportive of this proposal but believes that listing the reference in the chart will make it more useful. The Committee believes this item should be a Developing item, and references should be added to the chart.

At the CWMA 2019 Annual Meeting, Lisa Warfield (NIST Technical Advisor) commented that this information is from the FPLA, FTC, and FDA and compiled it. She reminded the Committee that this is not a regulation. Ms. Warfield submitted a revision to the CWMA for consideration, this will also move forward at the 2019 Fall regional meetings. Upon review the Committee believes this item to be fully developed and ready for Voting status.

Additional letters, presentations, and data may have been part of the Committee's consideration and were posted on the NCWM website during the time this item was on the Committee's agenda. To the extent possible, comments and positions from such documents have been summarized in the committee's report along with comments heard during the Committee's hearings.

NET – HANDBOOK 133

NET-4 V Section 3.4. Volumetric Test Procedures for Viscous Fluids - Headspace

(This item was Adopted.)

Source:
NIST OWM (2019)

Purpose:
Change the specification for depth gage micrometers to reduce cost while maintaining accuracy. Require distilled water for use with pipets or burets. Clarify test procedures.

Item Under Consideration:
Amend NIST Handbook 133 as follows:

3.4. Volumetric Test Procedures for Viscous Fluids – Headspace

Depending on how level the surface of the commodity is, use one of two headspace test procedures. Use ~~**the headspace test procedure in**~~ Section 3.4.2.a. **"Test Procedure for Testing Oils, Syrups, and other Viscous Liquids with a Smooth and Level Surface"** to determine volume where the liquid has a level surface (e.g., oils, syrups, and other viscous liquids). Use ~~**the procedure in**~~ Section 3.4.2.b. **"Test Procedure for Testing Mayonnaise, Salad**

This publication is available free of charge from: https://doi.org/10.6028/NIST.SP.1253

Dressing, and Water Immiscible Products with no Smooth and Level Surface" to determine volume where the commodity does not have a level surface (e.g., mayonnaise and salad dressing).

Before conducting either of the following volumetric test procedures, follow Section 2.3.1. "Define the Inspection Lot." Use a "Category A" sampling plan in the inspection; select a random sample, then use one of the following procedures to determine lot compliance.

3.4.1. Test Equipment

- Micrometer depth gage (ends of rods **may be flat or** fully rounded) 0 mm to 225 mm (0 in to 9 in) or longer
- Level (at least 152 mm (6 in) in length)
- Laboratory pipets and/or buret
  - Class A 100 mL buret as defined by the latest version of ASTM E287, "Standard Specification for Laboratory Glass Graduated Burets."
  - Class A pipets, calibrated "to deliver" "as defined by the latest version of ASTM E969, "Standard Specification for Glass Volumetric (Transfer) Pipets."
- **Distilled Water or Reverse Osmosis Water (for use with laboratory pipets and/or burets)**
- Volumetric measures
- Water
- Rubber bulb syringe
- Plastic disks that are 3 mm (1/8 in) thick with diameters equal to the seat diameter or larger than the brim diameter of each container to be tested. The diameter tolerance for the disks is 50 µm (± 0.05 mm [± 0.002 in]). The outer edge should be smooth and beveled at a 30° angle with the horizontal to 800 µm (0.8 mm [1/32 in]) thick at the edge. Each disk must have a 20 mm (¾ in) diameter hole through its center and a series of 1.5 mm (1/16 in) diameter holes 25 mm (1 in) apart around the periphery of the disk and 3 mm (1/8 in) from the outer edge. All edges must be smooth.
- Stopwatch
- Partial immersion thermometer (or equivalent) with 1°C (2 °F) graduations and a range of − 35 °C to + 50 °C (− 30 °F to + 120 °F) accurate to ± 1°C (± 2 °F)

3.4.2. Test Procedures

~~a.~~ Test Procedure for Testing Oils, Syrups, and other Viscous Liquids with a Smooth and Level Surface

Use the volumetric headspace procedure described in this section to determine volume when the commodity has a level surface. Open every package in the sample.
~~**Note: Make all measurements on a level surface.**~~

1. Bring the temperature of both the liquid and the water to be used to measure the volume of the liquid to the reference temperature specified in Table 3-1. "Reference Temperatures for Liquids." Verify with a thermometer that the product has maintained the reference temperature.

2. **Place the package on a level surface and open it.** Measure the headspace of the package at the point of contact with the liquid using a depth gage. ~~**with a fully rounded, rather than a pointed, rod end**~~. If necessary, support the package to prevent **deflection in** the bottom of the container **that may affect the volume.** ~~**from distorting.**~~

This publication is available free of charge from: https://doi.org/10.6028/NIST.SP.1253

3. Empty, clean, and dry the package.

4. Refill the container with water measured from a volumetric standard to the original liquid headspace level measured in Step 2 of this procedure until the water touches the depth gage.

5. Determine the amount of water used in Step 4 of this procedure to obtain the volume of the liquid and calculate the "package error" based on that volume.

"Package Error" = Labeled Value – Measured Volume

~~b.~~ Test Procedure for Testing Mayonnaise, Salad Dressing, and Water Immiscible Products with no Smooth and Level Surface

Use the following volumetric headspace procedure to determine volume when the commodity does not have a level surface (e.g., mayonnaise, salad dressing, and other water immiscible products without a level liquid surface). The procedure guides the inspector to determine the amount of headspace above the product in the package and the volume of the container. Determine the product volume by subtracting the headspace volume from the container volume. Open and test every package in the sample.
(Amended 2010 **and 2019**)

Note: Make all measurements on a level surface.

1. Bring the temperature of both the commodity and the water used to measure the volume to the appropriate temperature designated in Table 3-1. "Reference Temperatures for Liquids."

2. Open the first package and place a disk larger than the package container opening over the opening.

3. Measurement Procedure:

   - Deliver water from a flask (or flasks), graduate, or buret, through the central hole in the disk onto the top of the product until the container is filled. If it appears that the contents of the flask may overfill the container, do not empty the flask. Add water until all of the air in the container has been displaced and the water begins to rise in the center hole of the disk. Stop the filling procedure when the water fills the center disk hole and domes up slightly due to the surface tension. Do not add additional water after the level of the water dome has dropped.

   - If the water dome breaks on the surface of the disk, the container has been overfilled and the test is void; dry the container and start over.

4. To obtain the headspace capacity, record the volume of water used to fill the container and subtract 1mL (0.03 fl oz), which is the amount of water held in the hole in the disk specified.

5. Empty, clean, and dry the package container.

6. Using Steps 3 and 4 of this procedure, refill the package container with water measured from a volumetric measure to the maximum capacity of the package, subtract 1 mL (0.03 fl oz), and record the amount of water used as the container volume; and

7. From the container volume determined in Step 6 of this procedure, subtract the headspace capacity in Step 4 of this procedure to obtain the measured volume of the product.

8. Calculate the "package error" for that volume where "package error" equals labeled volume minus the measured volume of the product.

This publication is available free of charge from: https://doi.org/10.6028/NIST.SP.1253

3.4.3. Evaluation of Results

For either of the above procedures, follow the procedures in Section 2.3.7. "Evaluate for Compliance" to determine lot conformance.

Background/Discussion:
Based on hands-on training at a NIST Handbook 133 – Volumetric course held by the NIST Office of Weights and Measures we are proposing minor revisions to Chapter 3. Section 3.4. "Volumetric Test Procedures Viscous Fluids – Headspace".

The first change is to eliminate the specification that the rods of depth gage micrometers be machined to be "round" instead of the typical flat surface this is due to the cost of machining a set rods in most kits, which can exceed $500. Tests conducted using flat surface rods have been found to provide highly accurate volume determinations.

Another proposed change Section 3.4.1. to add distilled water for use with the laboratory pipets or burets. In addition, the language for step 2 of Section 3.4.2. Test Procedure was clarified.

At the 2019 NCWM Interim Meeting comments were heard from regulators showing support that this be a voting item. Mr. Ronald Hayes (Missouri) stated he would like language added assuring that this testing procedure applies only to containers with "rigid container sides". The Committee does concur with the NEWMA report to add the reverse osmosis water to the listing of testing equipment. The Item under Consideration as it appeared in Publication 15 (2019) was not accurate. The Section number throughout the test procedure should read Section 3.4. numbering. It appeared with a series of Section 3.7. the Committee is unsure if the comments were properly documented to pertain to the correct Item due to another Item under Consideration for Section 3.7. on their agenda. The Committee feels that this item is fully developed with editorial changes and recommends Voting status.

Regional Association Comments:
At the WWMA 2018 Annual Meeting, Ms. Lisa Warfield (NIST OWM) commented that this item is ready for vote. There were no other comments. The Committee believes this item is fully developed and recommends this as a Voting Item.

At the NEWMA 2018 Interim Meeting, Mr. Mike Sikula (New York) stated that he would like to add "reverse osmosis water" to the existing distilled water, as that is what many metrology labs are currently using. With that suggested change, the Committee determined that the item is fully developed and ready for voting status.

3.4.2. Test Equipment

- **<u>Distilled Water or Reverse Osmosis Water (for use with laboratory pipets and/or burets)</u>**

Regional Association Comments:
At the SWMA 2018 Annual Meeting, Ms. Lisa Warfield (NIST OWM) remarked that the change in this proposal modifies the depth gage micrometers to reduce the cost of maintaining accuracy. It also includes the use of distilled water. This also provides clarity to the test procedure. The SWMA recommended this be a Voting item.

At the CWMA 2018 Interim Meeting, Mr. Ivan Hankins (Iowa) commented that he believes this proposal modernizes testing procedures, and supports the item moving forward as a Voting item. The Committee believes this item is fully developed and ready for voting status.

At the 2019 CWMA Annual Meeting, Ms. Warfield commented there were some clarifications that occurred at the NCWM Interim Meeting. This language includes those modifications. The Committee believes this item is fully developed and ready for Voting status.

At the 2019 NEWMA Annual meetings there were no comments heard.

Additional letters, presentations, and data may have been part of the Committee's consideration and were posted on the NCWM website during the time this item was on the Committee's agenda. To the extent possible, comments and positions from such documents have been summarized in the committee's report along with comments heard during the Committee's hearings.

NET-5 V Section 3.7. Volumetric Test Procedure for Paint, Varnish and Lacquers – Non-Aerosol

(This item was Adopted)

Source:
NIST OWM (2019)

Purpose:
Change the specification for depth gage micrometers to reduce cost while maintaining accuracy. Provide a more efficient and practical method of verifying net contents of containers of paint.

Item Under Consideration:
Amend NIST Handbook 133 as follows:

3.7. Volumetric Test Procedure for Paint, Varnish, and Lacquers– Non-Aerosol

~~**Use one of three different test methods depending upon the required degree of accuracy and the location of the inspection. The procedures include both retail and in-plant audits, and a "possible violation" method that is designed for laboratory or in plant use because of cleanup and product collection requirements. The procedures are suitable to use with products labeled by volume and packaged in cylindrical containers with separate lids that can be resealed.**~~ **The following procedure is used to verify the net quantity of contents of containers of paint, varnish, wood stains, sealants, lacquers or like products labeled by volume. For the purposes of this test procedure the term "paint" includes any liquid or product (i.e., varnish lacquers, and other coatings)**.

3.7.1. Test Equipment

- A scale that meets the requirements in Section 2.2. "Measurement Standards and Test Equipment"
- Volumetric measures
- **Partial immersion thermometer (or equivalent with 1 °C (2 °F) graduations and a range of – 35 °C to + 50 °C (–30 °F to + 120 °F) accurate to ± 1 °C (± 2 °F)**
- Micrometer depth gage (ends of rods **may be flat or** fully rounded), 0 mm to 225 mm (0 in to 9 in)
- ~~**Diameter (Pi) tape measure, 50 mm to 304 mm (2 in to 12 in)**~~
- Spanning bar, 25.4 mm × 25.4 mm × 304 mm or (1 in × 1 in × 12 in)
- Rule, 304 mm (12 in)
- Paint solvent or other solvent suitable for the product being tested
- Cloth, 304 mm (12 in) square
- Wood, 50 mm (2 in) thick × 150 mm (6 in) wide × 300 mm (12 in) long
- Rubber mallet
- Metal disk **or other appropriate shape**, 6.4 mm ($^1/_4$ in) thick and slightly smaller than the diameter of package container bottom

This publication is available free of charge from: https://doi.org/10.6028/NIST.SP.1253

This publication is available free of charge from: https://doi.org/10.6028/NIST.SP.1253

- Rubber spatula
- Level at least 152 mm (6 in) in length
- Micrometer (optional)
- Stopwatch
- **Distilled Water or Reverse Osmosis Water**

(Amended 2019)

3.7.2. Test Procedures

~~a. Field (Retail) Auditing Procedure~~

~~Conduct a retail audit using the following test procedure that is suitable for checking cylindrical containers up to 4 L (1 gal) in capacity. Use Step 2 in the field (retail) auditing test procedure with any size container except 4 L (1 gal), but Step 3 must be used for containers with capacities of 4 L (1 gal). The method determines the volume of a single can in the sample selected as most likely to contain the smallest volume of product. Do not empty any containers since only their critical dimensions are being measured.~~

~~The configuration of the bottom of the can, paint clinging to the lid, and slight variations in the wall and label thicknesses of the paint container may produce an uncertainty estimated to be at least 0.6 % in this auditing procedure. Therefore, this method is recommended solely to eliminate from more rigorous testing those packages that appear to be full measure. Use the violation procedures when the volume determined in Step 10 is less than the labeled volume or in any case where short measure is suspected.~~

~~Note: When instructed to record a measurement in a column, refer to the numbered columns in the "Audit Worksheet for Checking Paint" in this section.~~

~~1. Select a random sample. A tare sample is not needed.~~

~~2. For containers less than 4 L or (1 gal):~~

- **~~Measure the outside diameter of each container near its middle to the closest 0.02 mm (0.001 in) using a diameter tape. Record the measurements in Column 3.~~**
- **~~Place the containers on a level surface and using the micrometer depth gage, record their heights in Column 1 on the worksheet.~~**
- **~~If the range of outside diameters exceeds 0.125 mm (0.005 in) or the range in heights exceeds 1.58 mm (0.062 5 in), do not use this procedure. If the ranges are within the specified limits, weigh all cans in the sample, select the container with the lightest gross weight, and remove its lid. Continue with Step 4 below.~~**

~~3. For 4 L (1 gal) containers:~~

- **~~Gross weigh each package in the sample.~~**
- **~~Select the package with the lightest gross weight and remove its lid.~~**

~~4. Use a direct reading diameter tape measure to measure the outside diameter of the selected container near its top, middle (already measured if Step 2 was followed), and bottom to the closest 0.02 mm (0.001 in). Record these measurements in Columns 2, 3, and 4. Add the three diameter values and divide by three to obtain the average diameter and record this value in Column 5.~~

This publication is available free of charge from: https://doi.org/10.6028/NIST.SP.1253

5. ~~If a micrometer is available, measure the wall and the paper label thickness of the container; otherwise, assume the wall and label thicknesses given in Table 3-3. "Thickness of Paint Can Walls and Labels" below:~~

   ~~Subtract twice the thickness of the wall of the can and paper label from the average can diameter (Step 4) to obtain the average liquid diameter. Record the liquid diameter in Column 6.~~

6. ~~On a level surface, place the container on the circular metal disk that is slightly smaller in diameter than the lower rim of the can so the bottom of the container nests on the disk to eliminate any "sag" in the bottom of the container.~~

7. ~~Place the spanning bar and depth gage across the top of the paint can and mark the location of the spanning bar on the rim of the paint container. Measure the distance to the liquid level, to the nearest 20 µm (0.02 mm) (0.001 in), at three points in a straight line. Take measurements at points approximately 1 cm (3/8 in) from the inner rim for cans 12.5 cm (5 in) in diameter or less (and at 1.5 cm [1/2 in] from the rim for cans exceeding 12.5 cm [5 in]) in diameter and at the center of the can. Add the three readings and divide by three to obtain the average distance to the liquid level in the container. Record the average distance to the liquid level in Column 7.~~

8. ~~Measure the distance to the bottom of the container at three points in a straight line in the same manner as outlined in Step 7. Add the three readings and divide by three to obtain the average height of the container and record it in Column 8.~~

9. ~~Subtract the average distance to the liquid level (Column 7) from the average height of the container (Column 8) to obtain the average height of the liquid column and record it in Column 9.~~

10. ~~Determine the volume of paint in the container by using the following formula:~~

$$\cancel{Volume = 0.7854\, D^2 H}$$

~~Where D = average liquid diameter (Column 6) and~~
~~H = average liquid height (Column 9)~~

11. ~~Record this value in Column 10. If the calculated volume is less than labeled volume, go to the Section 3.7.2.c. "Violation Procedure."~~

~~Table 3-3.~~ ~~Thickness of Paint Can Walls and Labels~~	
~~Can Size~~	~~Wall Thickness~~
~~4 L (1 gal)~~	~~250 µm (0.25 mm) [0.010 in]~~
~~2 L (½ gal)~~	
~~1 L (1 qt)~~	~~230 µm (0.23 mm) [0.009 in]~~
~~500 mL (1 pt)~~	
~~250 mL~~	~~200 µm (0.20 mm) [0.008 in]~~
~~Label Thickness* for all can sizes: 100 µm (0.10 mm) [0.004 in]~~ ~~(*Paper only – ignore labels lithographed directly onto the container)~~	

~~Note: Use the following format to develop worksheets to perform audits and determine the volume when checking paint. Follow the procedure and it will indicate the column in which the various measurements made can be recorded.~~

~~Example: Audit Worksheet for Checking Paint (add additional rows as needed)~~									
	~~Can Diameter~~								
~~1. Can Height~~	~~2. Top~~	~~3. Middle~~	~~4. Bottom~~	~~5. Average~~	~~6. Avg. Liquid Diameter~~	~~7. Avg. Liquid Level~~	~~8. Avg. Container Depth~~	~~9. Avg. Liquid Depth~~	~~10. Volume P[1]~~
~~[1]10. Volume = 0.7854 × 6 × 6 × 9~~									

a. Plant Audit Test Procedure

Use the following procedure to conduct an ~~in-plant~~ audit inspection i**n a production facility**. This method applies to ~~a~~ container**s in a sample** that ~~probably~~ **are the lightest in weight and likely to** contain~~s~~ the smallest volume of product. Duplicate the level of fill with water in ~~a~~ **an empty unused container** ~~can~~ of the same dimensions **and capacity** as the one under test. Use this method to check any size **rigid container**, ~~package~~ if the liquid level is within the measuring range of the depth gage. If any paint is clinging to the sidewall or lid, carefully scrape the paint into the container using a rubber spatula **to ensure the full content volume is measured**.

~~**Note: When instructed to record a measurement in a column, refer to the numbered columns in the "Audit Worksheet for Checking Paint" in Section 3.7.2.a.**~~

1. ~~**Follow Steps 1 through 6 of the Field Retail Audit Test in Section 3.7.2.a.**~~ **Follow Section 2.3.1. "Define the Inspection Lot" to determine which "Category A" sampling plan to use; select a random sample.**

Note: The sample containers shall be identically labeled as to volume, brand, commodity, color, and lot.)

2. **Determine the gross weight of the sample container. Record the gross weights of the lightest and heaviest container.**

3. ~~**Place the spanning bar and depth gage across the top of the paint can. Measure the liquid level at the center of the surface and record the level in Column 7.**~~ **Select the lightest container and place it on a level work surface and open it. Place a spanning bar and depth gage across the top center of the container. Lower the depth gage rod until its point touches the surface of the paint and lock the rod adjustment.**

4. ~~**Select an empty can with the same bottom configuration as the container under test and with a diameter and height equal to that of the container under test within plus or minus the following tolerances:**~~

   - ~~**For 500 mL or (1 pt) cans – within 25 µm (0.025 mm) (0.001 in)**~~

   - ~~**For 1 L or (1 qt) cans – within 50 µm (0.05 mm) (0.002 in)**~~

This publication is available free of charge from: https://doi.org/10.6028/NIST.SP.1253

This publication is available free of charge from: https://doi.org/10.6028/NIST.SP.1253

- ~~**For 2 L or (½ gal) cans – within 75 µm (0.075 mm) (0.003 in)**~~

- ~~**For 4 L or (1 gal) cans – within 100 µm (0.1 mm) (0.004 in)**~~

Obtain an empty, unused – undamaged container of the same type and capacity as the container under test from the packer. Place the container on a rigid level work surface and place a disk or other appropriate support under the bottom to prevent deflection.

5. ~~**Set the empty can on a level work surface with a circular metal disk that is slightly smaller in diameter than the bottom can rim underneath the can to eliminate sag. Set up the spanning bar and depth gage as in Step 2 above. Fill the container with water from a volumetric measure of the same volume as the labeled volume. Measure the distance to the liquid level at the center of the container and record this level in Column 7 below the reading recorded in Step 2. If this distance is equal to or greater than the distance determined in Step 2, assume that the package is satisfactory. If the distance is less than the distance determined in Step 2, the product may be short measure. When the audit test indicates that short measure is possible use the "Violation Procedure" in Section 3.7.2.c.**~~ **Use a volumetric flask or cylinder to fill the container with water [water reference temperature 20 °C ± 2 °C (68 °F ± 5 °F)] to the largest labeled quantity declared on the container.**

6. **Place the spanning bar and depth gage (locked at the surface depth of the paint in the container measured in Step 3.) across the top center of the container. If the point of the depth gage is at or below the surface of the water added in Step 4. assume the container is not short measure. When the audit test indicates that a short measure may exist in the sample container then use the test procedure in Section 3.7.2.b. "Compliance Test Procedure".**

~~**a. Violation**~~ **b. Compliance Test Procedure**

Use the following ~~**method if the liquid level is within the measuring range of the micrometer**~~ **procedure when testing rigid containers of paint or other liquid outside the plant and inside the plant if the sample fails the plant audit test.**

Note: Do not shake or invert the containers selected as the sample.

1. Follow Section 2.3.1. "Define the Inspection Lot" to determine which "Category A" sampling plan to use; select a random sample.
   (Note: The sample containers shall be identically labeled as to volume, brand, commodity, color, and lot.) The steps noted with an (*) are required if there is paint adhering to the lid and it cannot be removed by scraping into the can.

2. Determine the gross weight of these ~~**packages**~~ **containers** and record in Column 2 of the "**Example** Worksheet for Possible Violation in Checking Paint" ~~**worksheet**~~. (in this section). **Select and test the containers in order of the lightest to the heaviest.**

3. Record the labeled volume of the first tare sample container in Column 1 of the worksheet. **Place the container on a level surface and use** ~~**Use**~~ a circular **(or appropriately shaped)** metal **or other solid** disk to eliminate **deflection in the bottom of the container** ~~**can "sag"**~~ and remove the lid. If paint clings to the lid of the container, scrape it off with a spatula **and place into the container.**

4.* If paint that adheres to the lid cannot be completely removed by scraping the paint into the ~~**can**~~ **container**, determine the weight of the lid plus any adhering paint. Clean (dry) the paint lid with solvent and weigh again. Subtract the clean (dry) lid weight from the lid weight with paint (wet) to determine the weight of the paint adhering to the lid. Record this weight in Column 3.

This publication is available free of charge from: https://doi.org/10.6028/NIST.SP.1253

5. Place the spanning bar and depth gage across the top **center** of the ~~paint can~~ **container**. Mark the location of the spanning bar on the rim of the ~~paint~~ container. **Lower the depth gage rod until the point touches the paint surface and lock the rod adjustment.** ~~**Measure the distance to the liquid level at the center of the container to the nearest 20 µm (0.02 mm) (0.001 in). Record the distance in Column 4.**~~

6. Empty and clean the sample container and lid with solvent; dry and weigh the container and lid. Record the tare weight in Column 5.

7. Set up the container in the same manner as in Step 3.

8. Place the spanning bar at the same location on the rim of the paint container as marked in Step 5. With the depth gage set as described in Step 5, deliver water into the container in known amounts until the water reaches the same level occupied by the paint as indicated by the depth gage. Record this volume of water (in mL or fl oz) in Column 6 of the worksheet. This is the volume occupied by the paint in the container. Follow Steps 9a, 10a, and 11a if scraping does not remove the paint from the lid. ~~**In order**~~ **To** determine if gravimetric testing can be used to test the other ~~**packages**~~ **containers** in the sample, follow only Steps 9, 10, and 11 when no paint adheres to the lid.

9. Subtract the weight of the container (Column 5) from the gross weight (Column 2) to arrive at the net weight of paint in the selected container. Record the net weight in Column 7 of the worksheet.

   9a.* Subtract the weight of the container (Column 5) and the weight of product on the lid (Column 3) from the gross weight (Column 2) to arrive at the net weight of paint in the container. Record in Column 7 (excluding the weight of the paint on the lid).

10. Calculate the weight of the labeled volume of paint (for the first package opened for tare).

    net weight (Column 7) × labeled volume (Column 1) ÷ volume of paint in can (Column 6)

    Record this value in Column 8.

    10a.* Calculate the package volume =

    volume in can (Column 6) + (lid weight [Column 3] × volume in can [Column 6] ÷ net weight [Column 7])

    Record it in Column 9 of the worksheet.

11. Calculate the package error. Use the following formula if paint does not adhere to the lid.

    Package error = (Column 6 value) − (labeled volume)

    11a.* Use the following formula if paint does adhere to the lid and will not come off by scraping.

    Package error = (Column 9 value) − (labeled volume)

12. Repeat Steps 2 through 11 for the second package chosen for tare.

(Amended 2010 **and 2019**)

This publication is available free of charge from: https://doi.org/10.6028/NIST.SP.1253

Example Worksheet for Determining Possible Violation in Checking Paint (add additional rows as needed)								
1. Labeled Volume	**2. Gross Weight**	**3. Lid Weight (Wet − Dry)**	**4. Liquid Level**	**5. Tare**	**6. Water Volume**	**7. Net Wt. = 2 − 5**	**8. Weight of Labeled Volume = 7 × 1 ÷ 6**	**9. Package Volume = 6 + [(3 ÷ 7) × 6)]**

Note: A gravimetric procedure can be used if the weights of the labeled volume for the first two ~~**packages**~~ **containers** do not differ from each other by more than one division on the scale (if they meet this criterion, check the rest of the sample gravimetrically and record in Column 8). The weight of a given volume of paint often varies considerably from container to container; therefore, volumetric measurement may prove necessary for the entire sample **using the headspace procedure in Step 8. To determine the volume and enter the Package Volume in Column 9. Proceed to procedures in Section 2.3.7. "Evaluate for Compliance".**

Note: To conserve inspection time and reduce destructive testing the inspector may stop testing and consider this test as an audit if the first few containers contain the correct. However, the inspector may continue to test the complete sample to determine the average fill level of the entire sample.

13. Use Section 2.3.6. to determine the "Nominal Gross Weight" as follows:

    The nominal gross weight equals the sum of the average weight of the labeled volume (average of values recorded in Column 8) plus the average tare (average of values recorded in Column 3) for the ~~**packages**~~ **containers** selected for tare.

    Note that the weight of a given volume of paint often varies considerably from container to container; therefore, volumetric measurements may prove necessary for the entire sample.

3.7.3. Evaluation of Results

Follow the procedures in Section 2.3.7. "Evaluate for Compliance" to determine lot conformance.

(Amended 2019)

Background/Discussion:
Based on hands-on training at a NIST Handbook 133 – Volumetric course held by the NIST Office of Weights and Measures we are proposing several revisions to Chapter 3. Section 3.7. Volumetric Test Procedure for Paint, Varnish, and Lacquers – Non-Aerosol. The first change is to eliminate the specification that the rods of depth gage micrometers be machined to be "round" instead of the typical flat surface. This is due to the cost of machining a set of rods in most kits, which can exceed $500 and tests conducted using flat surface rods have been found to provide highly accurate volume determinations.

Another proposed change is to eliminate the audit test procedures that utilizes dimensional testing on cylindrical paint containers to estimate volume because these methods are both time consuming to perform and one has a large uncertainty (greater than 0.6 percent) which makes its use impractical in the field. Because the container designs and packaging materials used to package paint have changed since the 1970s when the current test procedures for paints were developed the OWM is recommending that revised version of the current "Violation Procedure" in 3.7.2.(c) be adopted because it utilizes a gravimetric test procedure (or, if the density of the paints varies excessively it instructs

This publication is available free of charge from: https://doi.org/10.6028/NIST.SP.1253

the inspector to use a headspace test procedure to determine volume) to verify the volume in any size or design of paint container and can be used for enforcement actions.

Section 3.7.1. "Test Equipment" –

- Deletes the requirement that the ends of rods be fully rounded because flat ends provide accurate test results and the requirement requires that the rods in depth gage sets be re-machined at the cost of several hundred dollars. Clarify additional information for the metal disk, remove Pi tape and add the need for a thermometer

Under Section 3.7.2. Test Procedures –

- Delete Section 3.7.2.a. "Field (Retail) Auditing Procedure" since the dimensional test procedure is only applicable to cylindrical containers and is difficult and time consuming to perform in the field and has an uncertainty that exceeds 0.6 percent.
- Revises the "Plant Audit Test Procedure" because it is only used for audit purposes.
- Revises the "Violation Procedure" to read "Test Procedure" to adapt it for use in testing any type or shape container of paint and add a note that if the gravimetric procedure cannot be used that Section 3.4. Volumetric Test Procedure for Viscous Fluids – Headspace" shall be used.
- Revises "Violation Procedure" to adapt it for use (see attachment title (Attachment for Form 15 Section 3-7 proposal.) in testing any type or shape container of paint and add a note that if the gravimetric procedure cannot be used that Section
- 3.7. Volumetric Test Procedure for Viscous Fluids – Headspace" shall be used.

There may be opposition since this proposal only eliminates some auditing procedures and includes minor revisions to the current violation procedure, which, if it cannot be used is replaced with the headspace test procedure in Section 3.7. Volumetric Test Procedures for Viscous Fluids - Headspace. At this time, NIST, OWM does not anticipate opposition.

At the 2019 NCWM Interim Meeting comments were heard from regulators showing support that this be a voting item. Mr. Ron Hayes (Missouri) stated he would like language added assuring that this test procedure applies only to containers with "rigid container sides". Mr. Kurt Floren (Los Angeles County, California) provided some editorial changes for the Test Procedure. The Committee accepted Mr. Florens' editorial changes. The Committee does concur with the NEWMA report to add the reverse osmosis water to the listing of testing equipment. The Committee also made the following editorial changes:

- Under 3.7.2.a. added the term **rigid container**
- Under the test equipment added "Distilled Water or Reverse Osmosis Water"
- Under 3.7.2.b. the title now reads "Compliance Test Procedure" and also reflected the test procedure to align with this numbering system.
- Use the following method if the liquid level is within the measuring range of the micrometer procedure when testing **rigid containers of paint or other liquid** outside the plant and inside the plant if the sample fails the plant audit test.
- At the 2019 Annual Meeting, it was noted that the sentence stating "Note: When instructed to record a measurement in a column, refer to the numbered columns in the "Audit Worksheet for Checking Paint" in Section 3.7.2.a." should be deleted since this no longer applies. The Committee removed the sentence.

The Committee feels this item is fully developed and recommends Voting status.

Regional Association Comments:
At the WWMA 2018 Annual Meeting, Ms. Lisa Warfield (NIST OWM) commented that this item is ready for vote. Mr. Kurt Floren (Los Angeles County, California) commented that he is supportive of this item with a few exceptions that are noted below. The Committee believes this item is fully developed and recommends this as a Voting Item with

the changes noted below. The changes noted below only include the portions of this item with the following recommended changes.

From the WWMA voting session:
On L&R Addendum Report, page 19, Mr. Floren commented that the change made as a final note, the repositioning of "and consider this test" should be double-underlined.

Committee acknowledge this as an editorial change. Change has been made in final report.

3.7. Volumetric Test Procedure for Paint, Varnish, and Lacquers– Non-Aerosol

~~**Use one of three different test methods depending upon the required degree of accuracy and the location of the inspection. The procedures include both retail and in-plant audits, and a "possible violation" method that is designed for laboratory or in-plant use because of cleanup and product collection requirements. The procedures are suitable to use with products labeled by volume and packaged in cylindrical containers with separate lids that can be resealed.**~~ **The following procedure is used to verify the net quantity of contents of containers of paint, varnish, wood, stains, sealants, lacquers or like products labeled by volume. For the purposes of this test procedure, the term "paint" includes any surface coating liquid or product (i.e., varnish, lacquers, and other coatings).**

Section **3.7.1 Test Equipment**, 12th bullet point:

- Metal disk **or other appropriate solid shape**, 6.4 mm (¼ in) thick and slightly smaller than the diameter of package container bottom. **(used to support the bottom of package and prevent deflection that may affect the volume)**

Section 3.7.2 Test Procedures, paragraph a:

Use the following procedure to conduct an ~~**in-plant**~~ audit inspection **in a production facility**. This method applies to ~~**a container**~~ **containers in a sample** that ~~**probably**~~ **are the lightest in weight and likely to contain** ~~**contains**~~ the smallest volume of product. Duplicate the level of fill with water in ~~a~~n **empty unused container** ~~**can**~~ of the same dimensions **and capacity** as the one under test. Use this method to check any size of package if the liquid level is within the measuring range of the depth gage. If any paint is clinging to the sidewall or lid, carefully scrape the paint into the container using a rubber spatula **to ensure the full content volume is measured**.

The second Note at the end of section 3.7.2 Test Procedures (WWMA L&R page 79):

Note: To conserve inspection time and reduce destructive testing, the inspector may stop testing and consider this test as an audit if **the first few containers contain the correct volume** ~~**and consider this test as an audit**~~. **However, the inspector may continue to test the complete sample to determine the average fill level of the entire sample**.

At the SWMA 2018 Annual Meeting, Ms. Lisa Warfield (NIST OWM) remarked that the change in this proposal modifies the depth gage micrometers to reduce the cost of maintaining accuracy.

At the 2018 NEWMA Interim Meeting, the Committee determined the item is fully developed and ready for Voting status.

At the NEWMA 2019 Annual Meeting, Mr. John McGuire (New Jersey) commented that in Section 3.7.2. it is incomplete. Lisa Warfield clarified that the original Form 15 ended the sentence with "volume and consider this test as an audit" and also noted that under the Plant Audit Test Procedure, the note regarding the Audit Worksheet for Checking Point should be stricken since it is not applicable with the test procedure. The Committee considers these as editorial and the item developed and ready for a vote with the editorial changes.

This publication is available free of charge from: https://doi.org/10.6028/NIST.SP.1253

At the CWMA 2018 Interim Meeting, Mr. Ivan Hankins (Iowa) commented that he believes this proposal modernizes testing procedures, and supports the item moving forward as a voting item. The Committee believes this item is fully developed and ready for Voting status. At the 2019 CWMA Annual meeting there were no comments heard and this is considered fully developed and ready for a vote.

Additional letters, presentations, and data may have been part of the Committee's consideration and were posted on the NCWM website during the time this item was on the Committee's agenda. To the extent possible, comments and positions from such documents have been summarized in the committee's report along with comments heard during the Committee's hearings.

NET-6 V Section 4.8. Procedure for Checking the Area Measurement of Chamois

(This item was Adopted.)

Source:
NIST OWM (2019)

Purpose:
To update and revise test procedure 4.8. Procedure for Checking the Area Measurement of Chamois.

Item Under Consideration:
Amend NIST Handbook 133 as follows:

4.8. Procedure for Checking the Area Measurement of Chamois

Chamois is a natural leather made from skins of sheep and lambs that have been oil-tanned. Chamois are irregularly shaped, **varying in thickness and density,** which makes area measurement difficult. ~~**Because of these characteristics, an accurate area determination can only be made using an internationally recognized method of conditioning (rehydrating) and measurement. Chamois is produced in a wet manufacturing process, so it has high moisture content at time of measurement. Chamois is hydroscopic; therefore, its dimensions and total area change as it loses or absorbs moisture. It is also subject to wrinkling. Because of the variation of the thickness and density, and therefore the weight per unit area of chamois, an estimated gross weight procedure cannot be used to verify the labeled area declaration.**~~

~~**Standard Test Conditions: As with all hydroscopic products, reasonable variations in measure must be allowed if caused by ordinary and customary exposure to atmospheric conditions that normally occur in good distribution practice. Both federal and international standards specify procedures to restore the moisture content of chamois so that tests to verify dimensions and area can be conducted.**~~

~~**Federal Test Method Standard 311, "Leather, Methods of Sampling and Testing," (January 15, 1969) defines the standard atmospheric condition for chamois as 50 ± 4 % relative humidity and 23 ± 2 °C (73.4 ± 3.6 °F). The chamois is considered to be at equilibrium moisture when the difference in two successive weighings, made at 1 hr intervals, is no greater than 0.25 % (e.g., the maximum change in weight on a 100 g sample in two successive weighings is less than 0.25 g (250 mg).**~~

The area of chamois is verified using **either Section 4.8.1. "Graph Paper Audit** ~~**using a two-stage test**~~ Procedure" **which is used to identify chamois that are potentially short measure or** ~~**The first stage is a field audit using the template test procedure. This test is used for field audits because it is simpler to perform and does not require the chamois to be conditioned. The field audit**~~ **Section 4.8.2. Graph Paper Audit Procedure which** is used to identify ~~**chamois that are potentially under**~~ ~~**It is not as accurate as the gravimetric procedure because some error results from reading the area from the template. The should be**~~ **is** used for compliance testing. ~~**because it includes conditioning (rehydrating) the chamois.**~~

This publication is available free of charge from: https://doi.org/10.6028/NIST.SP.1253

This publication is available free of charge from: https://doi.org/10.6028/NIST.SP.1253

4.8.1. ~~Template~~ Graph Paper ~~Test Method~~ Audit Procedure ~~(for field audits)~~

Chamois is typically labeled in uniform sizes in terms of square decimeters and square feet, and are sized in increments of **2.32 dm² (1/4 ft²)** (e.g., **9.29 dm² (**1 ft²**), 11.61 dm² (**1 1/4 **ft²),** and **13.93 dm² (**1 1/2 ft²).

4.8.1.1. Test Equipment

- ~~Use~~ **Graph Paper: 43.18 cm × 55.88 cm (17 in × 22 in) with 0.5 cm or 1/4 in squares.** ~~a transparent, flexible template that is graduated in square centimeters or square inches and that has been verified for accuracy. The template must be large enough to completely cover the chamois under test.~~

- **Rule or Steel Tape: 1 mm or 1/16 in graduations.**

4.8.1.2. Test Procedure

1. Select a random sample of chamois. ~~Separate the chamois into different sizes and define the inspection lot by specific sizes~~ **It is recommended that a minimum of three packages be tested.**

2. Place the **graph paper** ~~template over the chamois specimen~~ **on** a smooth surface. **Use a ruler or steel tape to verify the dimensions of squares at several random points across the page.** ~~Determine the area by counting the number of squares that covers the surface of the chamois. Estimate parts of the template that do not completely cover the chamois by adding the number of partially covered square blocks. (See Figure 4-3. "Template for Checking the Area of a Chamois") Compute the total area and refer to Section 4.8.3. to determine if further action is necessary.~~ **Place the chamois on the graph paper and carefully draw around the outline of the chamois on the paper.**

   Note: Graph paper of an appropriate size that allows for tracing of the entire chamois shall be used. However, if a single sheet of appropriate-sized graph paper is not available, it may be necessary to tape sheets of graph paper together to create an area sufficient in size to measure the area for a chamois (e.g., chamois greater than 23.22 dm² (2.5 ft²)).

3. **Determine the area by counting the number of squares the chamois covers. Use a ruler or steel tape to help calculate the area. Add the number of partially covered squares. (See Figure 4-3. "Template for Checking the Area of a Chamois.")**

4. **Compute the total area and refer to Section 4.8.3. Evaluation of Results, to determine if further action is necessary.**

First Stage – Decision Criteria

If the average of the samples is a plus error or a minus error that is 3 % or less of the labeled quantity, the audit test results should be accepted. Move on to inspect other chamois. If the average **of the samples is a** minus error **that** exceeds 3 % of the labeled area, the chamois may not be labeled accurately. To confirm the finding, ~~the sample must be taken to a laboratory for conditioning and testing using~~ **use** the gravimetric test procedure.

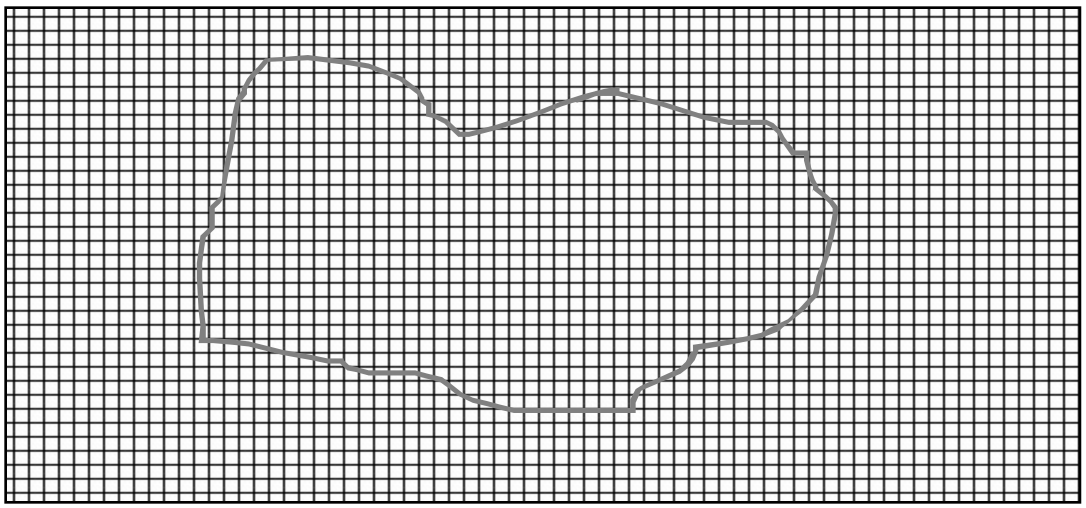

Figure 4-3. Template for Checking the Area of Chamois.

4.8.2. Gravimetric Test Procedure for Area Measurement

~~**This test cannot be performed in the field because the samples must be conditioned with water before testing.**~~ This method is intended for use in checking full or cut chamois, or pattern shapes. ~~**Open and condition all the packages in the sample before determining their area on the recommended paper. Conditioning and verifying chamois can be accomplished without destroying the product. When successful tests are completed, the chamois may be repackaged for sale, so do not destroy the packaging material.**~~

4.8.2.1. Test Equipment

- Scale with a capacity of 1 kg that is accurate to at least ± 0.01 g and a load-receiving element of adequate size to properly hold the chamois **(record to 0.1 g)**
- ~~**Atomizer or trigger-type sprayer and sealable, airtight polyethylene bags**~~
- Medium weight drawing paper (e.g., drawing paper, medium weight (100 lb), regular surface or comparable)
- A household iron **set on the lowest heat** ~~**with low**~~ temperature settings **(e.g., silk, nylon)** ~~**30 °C to 40 °C (86 °F to 104 °F)**~~
- Ruler or **Steel** Tape: ~~**that is graduated in centimeters or inches**~~ **1 mm or $^{1}/_{16}$ in graduations**
- Instrument for cutting paper (razor blade, scissors, **x-acto® knife,** or cutting board)
- **Steel Square**

~~**Sample Conditioning**~~

- ~~**Remove each sample from its package and weigh and record each weight. Using an atomizer-type sprayer, spray water in the amount of 25 % of the weight of each skin uniformly over its area. Place wetted chamois in an airtight polyethylene bag; seal the bag, and leave it in this condition at room temperature for 24 hours.**~~
- ~~**Open the bag, remove the chamois, and reweigh the chamois to confirm that it retained maximum moisture. (This is done by confirming that the difference in the two consecutive weighings conducted an hour apart does not exceed 0.25 %.)**~~

This publication is available free of charge from: https://doi.org/10.6028/NIST.SP.1253

This publication is available free of charge from: https://doi.org/10.6028/NIST.SP.1253

- ~~**Place the chamois flat on a continuous piece of drawing paper. To remove wrinkles and make the chamois lie flat, use a normal domestic iron that is heated to a maximum of 30 °C to 40 °C (86 °F to 104 °F). Place the iron on the bottom of the skin, and iron the skin up from the center to the top. Then, iron the skin from the center out to each side. Iron until the skin is fully extended and perfectly flat.**~~

4.8.2.2. Test Procedure

1. **Follow Sections 2.3.1. "Define the Inspection Lot." Use a "Category A" sampling plan in the inspection; and select random sample.**

2. **Use a household iron set on the lowest heat setting (e.g., silk, nylon) to remove wrinkles. Continuously iron the chamois from the center of the chamois to the outer edges in all directions, to spread and flatten out the wrinkles (some wrinkles may not flatten). Use a swift, steady motion, being careful to not let the iron stay in contact with the chamois surface for too long. Excessive heat will shrink the chamois. You may not be able to remove all wrinkles.**

3. Immediately after ironing **the sample**, carefully draw around the outline of the chamois on the paper. Remove the chamois; carefully cut along the outline of the chamois; ~~**weigh the cutout pattern, and record to the nearest 0.1 g Sample Weight 1 (W_1).**~~

4. Lay out the pattern and cut an accurately measured rectangle of a size not less than one-half the area of the pattern. **Do this for each sample.** Weigh the cutout rectangle and record the weight to the nearest 0.1 g Sample Weight 2 (W_2). ~~**Calculate the area of the rectangle cut from the patterns by multiplying length by width and record as Area (A) in centimeters or square inches**~~.

5. **Weigh the entire cutout pattern (the outline of the chamois which includes the cutout rectangle), and record to the nearest 0.1 g Sample Weight 1 (W_1).**

Note: To ensure the proper weighing of the paper outline of the chamois and the cutout rectangle it is recommended that the pieces be folded in a way so that the entire pattern is centered and not hanging over the load receiving element.

6. **Calculate the area of the rectangle cut from the pattern by multiplying length by width and record as Area (A) in centimeters or square inches.**

7. **Calculate the area of the original chamois.**

   - For metric units – calculate the area of the original **chamois** ~~**skin**~~ being checked as follows:

$$W_1/W_2 \times A = \text{Chamois Area in cm}^2/100 = \text{Area in dm}^2$$

   - For U.S. customary units – calculate the area of the original **chamois** ~~**skin**~~ being checked as follows:

$$W_1/W_2 \times A = \text{Chamois Area in in}^2/144 = \text{Area } \textbf{in} \text{ ft}^2$$

4.8.3. Evaluation of Results

Compute the average error for the sample and follow the procedures in Section 2.3.7. "Evaluate for Compliance to determine lot conformance.

The MAV for area declarations on chamois is 3 % of the labeled area as specified in Appendix A, Table 2-8. "Maximum Allowable Variations for Packages Labeled by Length, (Width), or Area".

(Amended 2019)

This publication is available free of charge from: https://doi.org/10.6028/NIST.SP.1253

Background/Discussion:
Questions on the test procedure arose during a NIST OWM advanced NIST HB133 training course. This led to a review, research and analysis of the chamois test procedure. As part of this process, the OWM sought the expertise and help of Hopkins Manufacturing Corporation (formerly Acme Sponge & Chamois Company) due to their leading role with NCWM in the 1970's, in the original development of this NIST HB 133 test procedure. In addition, review and input was sought from eight other companies, comprising a majority of the industry.

A significant change in the procedure, is the removal of the step "sample conditioning under Section 4.8.2. Gravimetric Procedure for Area Measurement. When initially developed in the 1970's, moisture loss was a significant factor when testing chamois. This is no longer a primary factor. Reasons for removing this step in the process is due to a shorter shelf life, improved store environmental conditions, and improved tanning process. With these improvements, chamois have become increasingly (negatively) reactive to the hydration/conditioning process (causing the chamois to swell and pulling the fiber inward), leading to shrinkage of the surface area, rather than the originally intended result of restoring area.

At the 2019 NCWM Interim Meeting no comments were heard on this item. All regions have recommended this item as voting. The Committee recommends this be a Voting item.

At the 2019 NCWM Annual Meeting, there was support heard for this item. There was concern that the test equipment should also stipulate a steel square so that a true cut is made to the chamois.

Regional Association Comments:
At the WWMA 2018 Annual Meeting, Ms. Lisa Warfield (NIST OWM) commented that there has been a significant change in this procedure to remove the laboratory portion. In the 1970s moisture loss was a significant factor, but this has since changed due to manufacturing processes. This test procedures have been tested in NIST training classes and with Los Angeles inspectors and found to work. Also, ambient temperatures in stores (air conditioning) have changed. Mr. Kurt Floren, (Los Angeles County, California) voiced support for this item, but added that investigators should have the correct equipment for conducting an inspection (referring to taping graph paper together in Section 4.8.1.2 paragraph 3).

The Committee believes this item is fully developed and recommends this as a Voting Item with the changes noted below. The changes noted below only include the portions of this item with recommended changes.

Section 4.8.1.2. Audit Test Procedure, paragraph 3:

> **Note: Graph paper of an appropriate size shall be used. However, if a single sheet of appropriate-sized graph paper is not available, it ~~It~~ may be necessary to tape sheets of graph paper together to create an area sufficient in size to measure the area for a chamois greater than 23.22 dm^2 (2.5 sq ft). Determine the area by counting the number of squares the chamois covers. Use a ruler to help calculate the area. Add the number of partially covered squares. (See Figure 4-3. "Template for Checking the Area of a Chamois.") Compute the total area and refer to the Decision Criteria ~~Section 4.8.3.~~ to determine if further action is necessary.**

At the SWMA 2018 Annual Meeting, Ms. Lisa Warfield (NIST OWM) discussed the chamois background and provided reasoning for the change to the procedure. In addition, the following was sent to the Committee for consideration:

> **Reasoning for the modification**: As stated under the test equipment the largest size of the required graph paper is 43.18 cm × 55.88 cm (17 in × 22 in). The modified language stresses that the inspector should use the largest graph paper available but may tape them together. This will discourage inspectors from using small size graph paper available in the marketplace. We are aware that inspectors know they must have proper equipment to perform an inspection.
>
> The changes noted below only include the portions of this item with recommended changes.

This publication is available free of charge from: https://doi.org/10.6028/NIST.SP.1253

Section 4.8.1.2. Audit Test Procedure, paragraph 3 change the first two sentence in the note to read as follows (I have bolded the change):

Note: Graph paper of an appropriate size shall be used. However, if a single sheet of appropriate-sized graph paper is not available, it may be necessary to tape sheets of graph paper together to create an area sufficient in size to measure the area for a chamois greater than 23.22 dm^2 (2.5 sq ft). Determine the area by counting the number of squares the chamois covers. Use a ruler to help calculate the area. Add the number of partially covered squares. (See Figure 4-3. "Template for Checking the Area of a Chamois.") Compute the total area and refer to the Decision Criteria ~~**Section 4.8.3.**~~ to determine if further action is necessary

At the NEWMA 2018 Interim and the 2019 Annual Meeting no comments were heard, and the Committee believes this item is fully developed and ready for Voting status.

At the CWMA 2018 Interim Meeting, no comments were heard. The Committee feels this item has been fully developed and is ready for voting status. At the 2019 CWMA Annual Meeting, Lisa Warfield (NIST Technical Advisor) commented that this proposal reflects all suggestions that were made through the Fall meeting rotation.

Additional letters, presentations, and data may have been part of the Committee's consideration and were posted on the NCWM website during the time this item was on the Committee's agenda. To the extent possible, comments and positions from such documents have been summarized in the committee's report along with comments heard during the Committee's hearings.

NET-7 V Section 4.11. Softwood Lumber

(This item was Adopted.)

Source:
NIST OWM (2018)

Purpose:
Provide inspectors and industry with a HB133 uniform test procedure for softwood lumber.

Item Under Consideration:
Amend NIST Handbook 133 as follows:

4.11. Softwood Lumber

4.11.1. Test Equipment

- **For labeled dimension up to 304 mm (12 in) use a caliper with 0.01 mm (0.0005 in) graduations (or digital equivalent).**
- **For labeled dimensions exceeding 304 mm (12 in), a steel linear measure with 1 mm or 1/16 in graduations.**
- **Set of gage blocks.**
- **Calculator**
- **Dimensional Lumber Worksheet (refer to Appendix C. Model Inspection Report Forms)**
- **Wood moisture meter (i.e., A meter equipped with a probe or dual probes and a hammer head handle for inserting the probes into the sample and that can have the moisture values manually or automatically corrected for different species of wood.)**
- **The latest version of U.S. Department of Commerce (DOC), Voluntary Product Standard PS 20 "American Softwood Lumber Standard."**

This publication is available free of charge from: https://doi.org/10.6028/NIST.SP.1253

4.11.2. Test Procedure

This procedure may be used to verify the width, length, and thickness of regularly shaped dimensional lumber. Softwood lumber is generally represented by both the nominal dimension and the minimum dressed sizes. Testing is based on the minimum dressed sizes for both unseasoned (green) and dry lumber as found in the latest version of Voluntary Product Standard PS 20 "American Lumber Softwood Standard." Lumber substitutes (i.e., composite) are not covered under Voluntary Product Standard PS 20 "American Lumber Softwood Standard." and must be labeled by actual dimensions.

NOTE: Lumber substitutes must be labeled by their actual dimensions.

1. **Follow Section 2.3.1. "Define the Inspection Lot." Use a "Category A" sampling plan in the inspection; select a random sample.**
   - **The lot must be sorted by like items (i.e., species, grade, dry) including dimensions and mill number. Identify the nominal size of each piece (e.g., 38 mm × 89 mm [2 in × 4 in], 38 mm × 286 mm [2 in × 12 in], or 19 mm × 140 mm [1 in × 6 in]) and the minimum dressed size using the latest version of Voluntary Product Standards PS-20, "American Softwood Lumber Standard."**
   - **Conduct a visual inspection of each piece to ensure there are no signs of water or other damage. Remove any pieces (e.g., top, sides) that have damage or have been exposed to the elements (e.g., weather, rain, moisture, sun) from the lot (See Figure 4-4. Example of lumber dimensions measured).**
2. **Verify the accuracy of the calipers using the gage blocks. Use the calipers to measure thickness and width and record the actual dimensions on the "Worksheet for Softwood Lumber."**
   - **For commodities labeled 3 m (10 ft) or less in length, take a minimum of three measurements across the thickness and three measurements across the width. Measurements should be evenly spaced at equal intervals (i.e., at locations approximately ¼, ½, and ¾ across the thickness and width). Calculate the average thickness and width measurement of each piece of wood.**
   - **For commodities labeled greater than 3 m (10 ft) in length, take one additional measurement per every additional 1.8 m (6 ft) or portion thereof.**

Note: Do not take measurements within 150 mm (6 in) from the ends or in areas where the lumber has a knot or damage would affect the measurement.

3. **Use a steel linear measure to determine the length of the piece of wood and record the actual length on the worksheet.**
   - **Take a minimum of three measurements across the length. Measurements should be evenly spaced at equal intervals (i.e., at locations across the length at approximate intervals of ¼, ½, and ¾ distance). Calculate the average length measurement of each piece of wood (See Figure 4-4. Example of lumber dimensions measured).**

Note: Do not take measurements in areas where the lumber has a knot or damage, which would affect the measurement.

This publication is available free of charge from: https://doi.org/10.6028/NIST.SP.1253

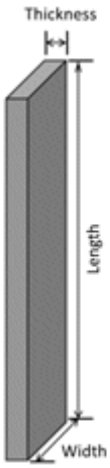

Figure 4-4. Example of lumber dimensions measured.

4.11.2.1. Shrinkage Allowance

Lumber is a product that shrinks and swells with changes in moisture content. The thickness and width of the lumber changes approximately 1 % for each 4 % change in moisture content and moisture shrinkage allowances shall be considered. The length of lumber changes only minimally (0.1 % to 0.2 %) when going from green to oven-dry, therefore no measurement adjustment or allowance is applicable to length measurements.

a. Dry Lumber

The latest version of U.S. DOC, Voluntary Product Standard PS 20 "American Softwood Lumber Standard" defines dry lumber as being 19 % or less in moisture content.

1. **Compare the actual dimensions of thickness, width, and length of each piece to the minimum dressed sizes in NIST Handbook 130, "Uniform Regulation for the Method of Sale of Commodities" Table 1. "Softwood Lumber Sizes" and record the differences as errors on the worksheet.**

2. **Calculate the average errors for thickness, width, and length. The dressed sized can exceed the nominal value for an individual piece.**

3. **If the average error for any thickness or width measurement is a minus value, or if the MAV is exceeded, perform a moisture test on each piece using a wood moisture meter to determine if a moisture shrinkage allowance should be applied. Apply the appropriate allowance to each piece, then re-calculate the average error and re-determine compliance with the MAV. If the average error is a minus value for any length measurement, or if the MAV is exceeded for any length measurement the lot fails. No moisture shrinkage allowance is applied to length (See Table 4-4. Determining Moisture Shrinkage Allowance for Dry Lumber Thickness and Width Dimensions Only.)**

   - **If the moisture content of the piece is equal to or greater than 19 %, the sample piece fails. No moisture shrinkage allowance is provided.**

Table 4-4. Determining Moisture Shrinkage Allowance for Dry Lumber Thickness and Width Dimensions Only	
If the Moisture Content is:	**Allow the Following Moisture Shrinkage Allowance:**
15.00 % - 18.99 %	**1.00 %**
	0.70 % for Redwood, Western Red Cedar, and Northern White Cedar
11.00 % - 14.99 %	**2.00 %**
	1.40 % for Redwood, Western Red Cedar, and Northern White Cedar
7.00 % - 10.99 %	**3.00 %**
	2.10 % for Redwood, Western Red Cedar, and Northern White Cedar
3.00 % - 6.99 %	**4.00 %**
	2.80 % for Redwood, Western Red Cedar, and Northern White Cedar

b. Unseasoned (Green) Lumber

The latest version of Voluntary Product Standard PS 20 "American Lumber Softwood Standard" defines unseasoned (green) lumber as being over 19 % in moisture content.

1. **Compare the actual dimensions of thickness, width, and length of each piece to the minimum dressed sizes in NIST Handbook 130, "Uniform Regulation for the Method of Sale of Commodities," Table 1. "Softwood Lumber Sizes" and record the differences as errors on the worksheet.**

2. **Calculate the average errors for thickness, width, and length. The dressed size can exceed the nominal value for an individual piece.**

3. **If the average error for any thickness or width measurement is a minus value, or if the MAV is exceeded, perform a moisture test on each piece using a wood moisture meter to determine if a moisture shrinkage allowance should be applied. Apply the appropriate allowance to each piece, then re-calculate the average error and re-determine compliance with the MAV. If the average error is a minus value for any length measurement, or if the MAV is exceeded for any length measurement the lot fails. No moisture shrinkage allowance is applied to length.**

   - **If the moisture content of the piece is equal to or greater than 30 % the sample piece fails. No moisture allowance is provided (See Table 4-4. Determining Moisture Shrinkage Allowance for Unseasoned (Green) Lumber Thickness and Width Dimensions Only).**

This publication is available free of charge from: https://doi.org/10.6028/NIST.SP.1253

This publication is available free of charge from: https://doi.org/10.6028/NIST.SP.1253

Table 4-4. Determining Moisture Shrinkage Allowance for Unseasoned (Green) Lumber Thickness and Width Dimensions Only	
If the Moisture Content is:	**Allow the Following Moisture Shrinkage Allowance:**
26.00 % - 29.99 %	**1.00 %**
	0.70 % for Redwood, Western Red Cedar, and Northern White Cedar
22.00 % - 25.99 %	**2.00 %**
	1.40 % for Redwood, Western Red Cedar, and Northern White Cedar
18.00 % - 21.99 %	**3.00 %**
	2.10 % for Redwood, Western Red Cedar, and Northern White Cedar
14.00 % - 17.99 %	**4.00 %**
	2.80 % for Redwood, Western Red Cedar, and Northern White Cedar
10.00 % - 13.99 %	**5.00 %**
	3.50 % for Redwood, Western Red Cedar, and Northern White Cedar
6.00 % - 9.90 %	**6.00 %**
	4.20 % for Redwood, Western Red Cedar, and Northern White Cedar
2.00 % - 5.99 %	**7.00 %**
	4.90 % for Redwood, Western Red Cedar, and Northern White Cedar

4.11.3. Evaluation of Results

1. **To determine lot conformance, return to Section 2.3.7. "Evaluate for Compliance."**

2. **If the sample pieces do not meet the average and MAV requirement based on the minimum dressed sizes after the shrinkage (moisture) allowances are considered, the lot fails. Place the Inspection Lot on hold.**

***Inspectors should notify the American Lumber Standard Committee (ALSC) of any lots that fail compliance.**

American Lumber Standard Committee, Inc.
7470 New Technology Way, Suite F.
Frederick, MD 21703
301-972-1700 or 301-540-8004
E-mail: alsc@alsc.org URL: www.alsc.org

(Added 2019)

This publication is available free of charge from: https://doi.org/10.6028/NIST.SP.1253

Worksheet for Softwood Lumber

Product:		**Manufacturer/Mill Number:**	
Labeled Dimensions:		**Address:**	**City/State/Zip:**
Length:			
Width:		**Brand/Grade/Surface:**	**Testing Location:**
Thickness:			

Piece Number	Average Length	Average Width	Average Thickness		Piece Number	Average Length	Average Width	Average Thickness
1.					**7.**			
Error:					**Error:**			
2.					**8.**			
Error:					**Error:**			
3.					**9.**			
Error:					**Error:**			
4.					**10.**			
Error:					**Error:**			
5.					**11.**			
Error:					**Error:**			
6.					**12.**			
Error:					**Error:**			
Total Average:								
Average Error:								

Rev. (XX/XX)

This publication is available free of charge from: https://doi.org/10.6028/NIST.SP.1253

Worksheet for Softwood Lumber

MAV for Packages Labeled by Length, Width, or Area (Table 2-8)

(Note: Lumber of a predetermined dimension is considered a "package" as defined by NIST Handbook 130, "Uniform Packaging and Labeling Regulations.)

- **1 m (1 yd) or less in 3 % of labeled quantity.**
- **More than 1 m (1 yd) to 43 m (48 yd) is 1.5 % of labeled quantity.**

Section 1. Compliance with Maximum Allowable Variation

1. Calculate the MAV for labeled thickness = _____. Do any of the minus errors for thickness exceed the MAV?

a. If yes, go to Section 5.

b. If no, go to Section 2.

2. Calculate the MAV for length = _____. Do any of the minus errors for width exceed the MAV?

a.If yes, go to Section 5.

b.If no, go to Section 3.

3. Calculate the MAV for labeled width = _____. Do any of the minus errors for length exceed the MAV?

a. If yes, go to Section 5.

b. If no, go to Section 4.

Section 2. Compliance with the Average Requirement – Thickness

4. Calculate the Average Error for labeled thickness _____. The sample passes this requirement if the Average Error is zero or a positive number. Go to Section 3. If the Average Error is a negative number, go to Step 5.

5. Calculate the Sample Standard Deviation (*s*) and multiply (*s*) by the Sample Correction Factor (*SCF*) for the sample size to obtain the Sample Error Limit (*SEL*). Go to Step 6.

(s) _____ × (***SCF***) _____ = ***SEL*** _____

6. Disregarding the signs, is the *SEL* in Step 5 larger than the Average Error in Step 4? If yes, the lot passes on thickness. If no, go to Section 3.

This publication is available free of charge from: https://doi.org/10.6028/NIST.SP.1253

Section 3. Compliance with the Average Requirement – Length

7. Calculate the Average Error for labeled length _____. The sample passes this requirement if the Average Error is zero or a positive number. Go to Section 4. If the Average Error is a negative number, go to Step 8.

8. Calculate the Sample Standard Deviation (*s*) and multiply (*s*) by the Sample Correction Factor (*SCF*) for the sample size to obtain the Sample Error Limit (*SEL*). Go to Step 9.

***(s)*_____ × (*SCF*) _____ = *SEL* _____**

9. Disregarding the signs, is the *SEL* in Step 8 larger than the Average Error in Step 7? If yes, the lot passes on length. If no, go to Section 4.

Section 4. Compliance with the Average Requirement – Width

10. Calculate the Average Error for labeled width . The sample passes this requirement if the Average Error is zero or a positive number. Go to Section 6. If the Average Error is a negative number, go to Step 11.

11. Calculate the Sample Standard Deviation (*s*) and multiply (*s*) by the Sample Correction Factor (*SCF*) for the sample size to obtain the Sample Error Limit (*SEL*). Go to Step 12.

***(s)*_____ × (*SCF*) _____ = *SEL* _____**

12. Disregarding the signs, is the *SEL* in Step 11 larger than the Average Error in Step 10? If yes, approve the lot. If no, go to Section 5.

Section 5. Determine Moisture Shrinkage Allowance

If the average error for any thickness or width measurement is a minus value, or if the MAV is exceeded, perform a moisture test on each piece to determine if a moisture shrinkage allowance should be applied. Apply the appropriate allowance to each piece, then re-calculate the average error and re-determine compliance with the MAV. If the average error is a minus value for any length measurement, or if the MAV is exceeded for any length measurement the lot fails. No moisture shrinkage allowance is applied to length.

Piece Number	Moisture Content	Moisture Shrinkage Allowance		Piece Number	Moisture Content	Moisture Shrinkage Allowance
1.				7.		
2.				8.		
3.				9.		
4.				10.		

5.				**11.**		
6.				**12.**		

Section 6. Action Taken: ☐ **Lot Rejected** ☐ **Lot Approved**

Comments:	**Official Name/Signature:**
	Date:

Random Numbers: Enter the numbers as you select them in the top row and reorder them in the bottom row.

rev. (xx/xx)

Background/Discussion:
There is not a test procedure for softwood lumber in NIST HB133. The proposed procedure follows good measuring practices for products sold by linear measure. Over the past several years' states have requested guidance for a test procedure that determines the accuracy of softwood lumber. The test procedure was derived in part from the efforts of the California Division of Measurement Standards whose development and use over the years has shown reliable and repeatable results. This procedure was also developed with input provided from Mr. David Kretschmann, (President, American Lumber Standards Committee {ALSC}) whose field representatives complete over 300 inspections a year to ensure self-compliance within their industry. ALSC field representatives validated the attached test procedure on 16 different size and types of softwood products.

At the 2018 NCWM Interim Meeting, Mr. Kretschmann commented that he used the test procedures and it works. Mr. Kretschmann also submitted a letter of support for this item. Mr. Kurt Floren (Los Angeles County, California) commented that NIST Handbook 133, Section 4.10.3.2. should clarify moisture content range requirements (for example, if it is 25.1 % through 25.9 %, which paragraph would apply, 4.10.3.2(3)(a) or 4.10.3.2(3)(b)). This lack of clarity also exists in in the dry lumber section. Lastly, on the worksheet the MAV Table 2.8. Maximum Allowable Variations (MAVs) for Packages Labeled by Length, Width, or Area refers to 'packaging' and should be changed to reference softwood lumber. Several regulators commented on the need and cost to purchase new equipment such as gauge blocks and calipers for following these test procedures. Mr. Kretschmann commented that they are not concerned with gauge blocks or calipers, the moisture meter is most important. Due to the uncertainty of the applied tolerance due to moisture content, the L&R Committee recommends this item as Developing.

At the 2018 NCWM Annual Meeting, Mr. Kretschmann was supportive of the shrinkage changes that have been addressed since the NCWM Interim Meeting. The Committee received modified language from NIST OWM and will move this language forward.

This publication is available free of charge from: https://doi.org/10.6028/NIST.SP.1253

At the 2019 NCWM Interim Meeting, several industry representatives stated their support for this item being moved to voting status. No comments were heard from regulators. The Committee feels this item is fully developed and recommends this be a Voting item.

At the 2019 NCWM Annual Meeting, Mr. David Kretschmann (ALSC) rose in support of this item and remarked that it is fully developed. Mr. Kevin Schnepp (California) did not support this item believing that it is not fully developed. James Willis (New York) also opposed this item believing that it went far beyond what a test procedure would call for. It was also commented that the calipers provide a far better measurement than a ruler. Mr. Kurt Floren (Los Angeles County, California) supports moisture allowances and data reflects it should be given. NIST OWM noted that calipers do cost money, an appropriate tool to use rather than rulers. The Committee did not feel that this equipment was cost prohibitive and the level of test equipment is important when taking enforcement action.

Regional Association Comments:
At the WWMA 2018 Annual Meeting, Mr. David Kretschmann (ALSC) and Mr. Steve Zylkowski (APA) provided a presentation and answered technical questions. Lisa Warfield (NIST OWM) commented that this item is fully developed and ready for vote. Mr. Kurt Floren (Los Angeles County, California) supports the proposal but requests changes regarding the decimal places for the moisture content in Table X.X on page 85 and Table X.X on page 86. The submitter agrees with the changes and submitted updated tables as presented below. Mr. Floren also questioned the cost of the moisture meters used for testing and the presenter noted they are around $300. The Committee believes this item is fully developed and recommends this as a Voting Item with the changes noted below.

Table X-X. Determining Moisture Shrinkage Allowance for Dry Lumber Thickness and Width Dimensions Only	
If the Moisture Content is:	**Allow the Following Moisture Shrinkage Allowance:**
15.00 % - 18.99 %	**1.00 %**
	0.70 % for Redwood, Western Red Cedar, and Northern White Cedar
11.00 % - 14.99 %	**2.00 %**
	1.40 % for Redwood, Western Red Cedar, and Northern White Cedar
7.00 % - 10.99 %	**3.00 %**
	2.10 % for Redwood, Western Red Cedar, and Northern White Cedar
3.00 % - 6.99 %	**4.00 %**
	2.80 % for Redwood, Western Red Cedar, and Northern White Cedar

Table X-X. Determining Moisture Shrinkage Allowance for Unseasoned (Green) Lumber Thickness and Width Dimensions Only	
If the Moisture Content is:	**Allow the Following Moisture Shrinkage Allowance:**
26.00 % - 29.99 %	**1.00 %**
	0.70 % for Redwood, Western Red Cedar, and Northern White Cedar
22.00 % - 25.99 %	**2.00 %**
	1.40 % for Redwood, Western Red Cedar, and Northern White Cedar
18.00 % - 21.99 %	**3.00 %**
	2.10 % for Redwood, Western Red Cedar, and Northern White Cedar

This publication is available free of charge from: https://doi.org/10.6028/NIST.SP.1253

Table X-X. Determining Moisture Shrinkage Allowance for Unseasoned (Green) Lumber Thickness and Width Dimensions Only	
14.00 % - 17.99 %	4.00 %
	2.80 % for Redwood, Western Red Cedar, and Northern White Cedar
10.00 % - 13.99 %	5.00 %
	3.50 % for Redwood, Western Red Cedar, and Northern White Cedar
6.00 % - 9.99 %	6.00 %
	4.20 % for Redwood, Western Red Cedar, and Northern White Cedar
2.00 % - 5.99 %	7.00 %
	4.90 % for Redwood, Western Red Cedar, and Northern White Cedar

At the SWMA 2018 Annual Meeting, Ms. Lisa Warfield (NIST OWM) remarked that a modified chart (refer to WWMA report) was submitted into the Committee that amends the decimal on the percentage.

At the 2018 NEWMA Interim Meeting, Mr. Mike Sikula (New York) stated he still has concerns that these requirements are too onerous from a standards perspective and are not appropriate. He would support the item if the equipment requirements are more reasonable. A calibrated steel linear measure should be an alternative to precision gage blocks and a caliper. As a result, the Committee recommends the item remain as Developing. At the 2019 NEWMA Annual Meeting there were no comments and the Committee believes this to be fully developed and ready for a vote.

At the 2018 CWMA Interim Meeting, Mr. Doug Musick (Kansas) commented that he attended the Southern regional meeting and there were spokespeople there who supported this item, as well as NET-8. The Committee did not have the understanding necessary to recommend a status. At the 2019 CWMA Annual Meeting, Lisa Warfield (NIST Technical Advisor) commented that the suggested changes that came in the Fall have been incorporated into the CWMA agenda. The Committee believes this item is fully developed and ready for a Vote.

Additional letters, presentations, and data may have been part of the Committee's consideration and were posted on the NCWM website during the time this item was on the Committee's agenda. To the extent possible, comments and positions from such documents have been summarized in the committee's report along with comments heard during the Committee's hearings.

NET-8 V Section 4.10. Structural Plywood and Wood-Based Structural Panels

(This item was Adopted)

Source:
NIST OWM (2018)

Purpose:
Provide inspectors and industry with a HB133 uniform test method for Plywood and Wood-Based Structural Panels.

Item Under Consideration:
Amend NIST Handbook 133 as follows:

4.10. Structural Plywood and Wood-Based Structural Panels

4.10.1. Test Equipment

This publication is available free of charge from: https://doi.org/10.6028/NIST.SP.1253

This publication is available free of charge from: https://doi.org/10.6028/NIST.SP.1253

- **Steel linear measure**
  - **For labeled dimensions exceeding 304 mm (12 in), use a measure with 0.05 mm (1/32 in or 0.031 in) graduations.**
- **Calculator**
- **Worksheet for Plywood Sheet and Wood-Based Structural Panels**
- **Micrometer, caliper, or dial gauge 25 mm to 50 mm (1 in to 2 in) with 19.1 mm (3/4 in) anvils**
  - **A mechanism that applies constant pressure between 34 kPa (5 psi) and 69 kPa (10 psi) during the measurement.**
- **For "tongue and groove" (e.g., floor panels) and "shiplap" (e.g., exterior siding panels), a micrometer with a 152 mm (6 in) throat; 19.1 mm (3/4 in) anvils may be necessary.**
  - **A mechanism that applies constant pressure between 34 kPa (5 psi) and 69 kPa (10 psi) during the measurement.**
- **Gage blocks**
- **The latest version of U.S. Department of Commerce (DOC), Voluntary Product Standard PS 1-09, "Structural Plywood."**
- **The latest version of U.S. Department of Commerce (DOC), Voluntary Product Standard PS 2-18, "Performance Standard for Wood-Based Structural-Use-Panels."**
- **Aluminum foil and plastic bags**
- **Saw**

4.10.2. Test Procedure

Use this procedure to verify the length, width, and thickness of structural plywood and wood-based structural panels.

1. **Follow Section 2.3.1. "Define the Inspection Lot." Use a "Category A" sampling plan in the inspection. Select a random sample.**

2. **Identify the Performance Category and actual size of each piece (e.g., 1.2 m × 2.4 m) (4 ft × 8 ft) from the latest version of Voluntary Product Standards PS 1-09, "Structural Plywood" or PS 2-18, "Performance Standard for Wood-Based Structural-Use-Panels".**

3. **Conduct a visual inspection of each piece to ensure there are no signs of water or other damage. Remove any pieces (e.g., top, sides) that have damage or have been exposed to the elements (e.g., weather, rain, moisture, sun) from the lot.**

Note: Overlapping (e.g., shipped siding) or interlocking panels (e.g., tongue and groove floor panels) shall be measured according to the exposed face. Measurements are taken on the surface that will be exposed after installation and shall not include the overlap tab.

This publication is available free of charge from: https://doi.org/10.6028/NIST.SP.1253

4. Determining Length

- **For sheet lengths up to 3 m (10 ft), take at least two measurements along the sheet's length about one-quarter of the distance from the center line to each edge of the sheet (See Figure 4. Determining Length). Average the results to obtain the Average Length.**

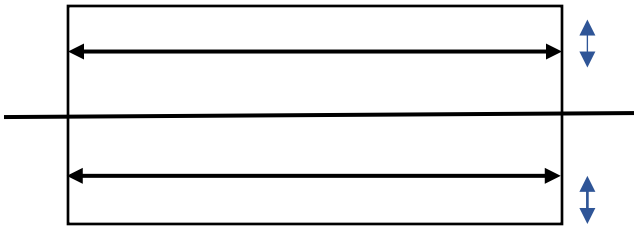

Figure 4. Determining Length
Take measurements at least 152 mm (6 in) in from each edge.

Note: Measurements should not be made across the ends of the board or where there is a knot or surface defect that may affect the measurement. Measurements should not be taken within 150 mm (6 in) from the edges of the sheet.

5. Determining Width

- **For sheet lengths up to 3 m (10 ft), take at least two measurements across the sheet's width about one-quarter of the distance from each end of the sheet (See Figure 5. Determining Width). Average the results to obtain the Average Width.**

Note: Measurements should not be made anywhere across the sheet where there is a knot or surface defect that may affect the measurement. Measurements should not be taken within 150 mm (6 in) from the ends of the sheet.

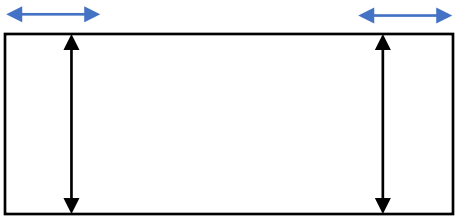

Figure 5. Determining Width - Take measurement at least 152 mm (6 in) in from each edge.

6. Determining Thickness

- **Verify the accuracy of the micrometer, caliper, or dial gauge using the gage blocks. Use the micrometer, caliper, or dial gauge 25 mm to 50 mm (1 in to 2 in); 19.1 mm (3/4 in) anvils to measure thickness and record the actual dimensions on the "Worksheet for Plywood Sheets." For "tongue and groove" (e.g., floor panels) and "shiplap" (e.g., exterior siding panels) a micrometer with a 152 mm (6 in) throat; 19.1 mm (3/4 in) anvils may be necessary.**
- **Panel thickness shall be measured with a micrometer having 19.1 mm (3/4 in) (minus 0, plus 1.3 mm [0.050 in]) diameter anvils.**

- **Measurements shall be taken at an applied anvil pressure of not less than 34 kPa (5 psi) or more than 69 kPa (10 psi) with the anvil center at 19 mm to 25 mm (3/4 in to 1 in) from the panel edge.**
- **The location of the measurements shall be representative of general panel thickness at approximate mid-length, ± 50 mm (2 in) along each edge of the panel and the average of the four measurements shall be taken as the thickness of that panel (see Figure 6. Determining Thickness). If a measurement point contains a permissible grade characteristic that affects panel thickness, then the measurement point shall be shifted from that point.**

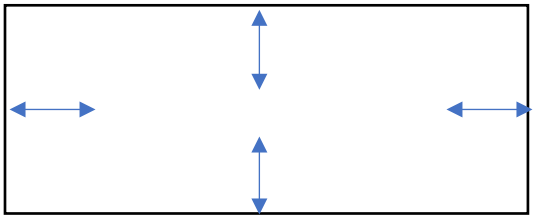

Figure 6. Determining Thickness - Take measurements at least 50 mm (2 in) in from each edge.

4.10.2.1. Labeling and Other Requirements for Structural Plywood and Wood-Based Structural Panels

a. Structural Plywood Sheets

1. **Shall be labeled in accordance with the latest version of Voluntary Product Standard PS 1-09 "Structural Plywood."**
2. **Includes grade, performance category (abbreviations: PERF CAT, CAT or Category are permitted), thickness, and mill number.**
3. **Panel sizes are typically 1.2 m (4 ft) × 2.4 m (8 ft), or 2.7 m (9 ft) or 3 m (10 ft) on a nominal basis.**
4. **Panel length and width information may be included on the label, tag, or printed directly on the unit.**
5. **Panels shall comply with the thickness tolerances for the performance category in the latest version of Voluntary Product Standard PS 1-09, "Structural Plywood" Table 10, "Plywood Thickness Requirements."**
6. **Panels shall bear the stamp of a qualified inspection and testing agency in accordance with the latest version of Voluntary Product Standard PS 1-09, "Structural Plywood" Section 7.1. Certification.**

b. Structural Panels

1. **Shall be labeled according to the latest version of Voluntary Product Standard, PS 2-10 "Performance Standard for Wood-Based Structural-Use Panels" for grade, span rating, performance category (abbreviations: PERF CAT, CAT or Category are permitted), thickness, and mill number.**
2. **Performance category, such as 23/32 PERF CAT, means the sheet shall comply with the thickness tolerances for 23/32 PERF CAT in the latest version of Voluntary Product**

This publication is available free of charge from: https://doi.org/10.6028/NIST.SP.1253

This publication is available free of charge from: https://doi.org/10.6028/NIST.SP.1253

Standard PS2-18, "Performance Standard for Wood-Based Structural-Use Panels." Table 1 "Panel Thickness Requirements."

3. **Panels shall bear the stamp of a qualified inspection and testing agency in accordance with the latest version of Voluntary Product Standard PS 2-10, "Performance Standard for Wood-Based Structural-Use Panels", Section 8.1. Certification.**

Notes:

1) **When structural plywood sheets or structural panels are tested in retail stores, it is recommended that they be sorted by mill and then panel type (grade, thickness).**

2) **If a lot consists of mixed sheets or panels from different production runs and/or productions lots, be sure to record the codes for all sheets in the sample so the inspector and other interested parties can follow up on the information.**

3) **Record or attach a photograph of the information located on the grade stamp including the manufacturer, grade, standard (i.e., PS 1), mill number, and agency.**

4.10.2.2. Moisture Shrinkage Allowance for Structural Plywood and Wood-Based Structural Panels

Structural Plywood and Oriented Strand Board (OSB) shrink and swell with changes in moisture content. The standardized moisture content for Structural Plywood is 9 % (PS 1-09, "Structural Plywood," Section 5.10., "Dimensional Tolerances and Squareness of Panels)". The equivalent standardized moisture content of OSB is 8 %.

1. **If the average error is a minus value, determine the moisture content on each piece using the latest version of ASTM D4442, "Standard Test Methods for Direct Moisture Content Measurement of Wood and Wood-Based Materials," Method B. "Secondary Oven-Drying Method".**

   Note: The inspection lot shall be put on hold (i.e., "inspection hold," not permitted to be moved, sold, or otherwise distributed pending testing completion) while a determination is being made.

2. **Using a saw, cut a 15.24 cm × 15.24 cm (6 in × 6 in) piece from each sample at least 50 mm (2 in) from any edge.**

3. **Tightly wrap each piece in aluminum foil and place each sample in a plastic bag to preserve moisture content during transport to the laboratory.**

   a. **Moisture Shrinkage Allowance – Thickness for Structural Plywood and OSB**

1. **For structural plywood: 0.35 % adjustment per 1 % moisture content below 9 %. (see Table 4-1. "Determining Moisture Shrinkage Allowance for Structural Plywood")**

2. **For OSB: 1.0 % adjustment per 1 % moisture content below 8 % (see Table 4-1. "Determining Moisture Shrinkage Allowance for OSB".)**

   b. **Moisture Shrinkage Allowance – Length and Width for Structural Plywood and OSB**

1. **For Structural plywood: 0.04 % adjustment per 1 % moisture content below 9 %. (See Table 4-1. "Determining Moisture Shrinkage Allowance for Structural Plywood".)**

This publication is available free of charge from: https://doi.org/10.6028/NIST.SP.1253

2. For OSB: 0.04 % adjustment per 1 % moisture content below 8 % (see Table 4-2. Determining Moisture Shrinkage Allowance for Oriented Strand Board (OSB).

Table 4-1. Determining Moisture Shrinkage Allowance for Structural Plywood		
If the Moisture Content is:	**Allow the Following Moisture Shrinkage Allowance for Thickness:**	**Allow the Following Moisture Shrinkage Allowance for Length and Width:**
8.00 % - 8.99 %	0.35 %	0.04 %
7.00 % - 7.99 %	0.70 %	0.08 %
6.00 % - 6.99 %	1.05 %	0.12 %
5.00 % - 5.99 %	1.40 %	0.16 %
4.00 % - 4.99 %	1.75 %	0.20 %
3.00 % - 3.99 %	2.10 %	0.24 %
2.00 % - 2.99 %	2.45 %	0.28 %
1.00 %- 1.99 %	2.80 %	0.32 %
0.00 %- 0.99 %	3.15 %	0.36 %

Table 4-2. Determining Moisture Shrinkage Allowance for Oriented Strand Board (OSB)		
If the Moisture Content is:	**Allow the Following Moisture Shrinkage Allowance for Thickness:**	**Allow the Following Moisture Shrinkage Allowance for Length and Width:**
7.00 % - 7.99 %	1.00 %	0.04 %
6.00 % - 6.99 %	2.00 %	0.08 %
5.00 % - 5.99 %	3.00 %	0.12 %
4.00 % - 4.99 %	4.00 %	0.16 %
3.00 % - 3.99 %	5.00 %	0.20 %
2.00 % - 2.99 %	6.00 %	0.24 %
1.00 % - 1.99 %	7.00 %	0.28 %
0.00 % - 0.99 %	8.00 %	0.32 %

***It is recommended that the inspector notify APA – The Engineered Wood Association, if any lots fail compliance.**

APA
7011 S. 19th Street
Tacoma, WA 98466
Main Phone: (253) 565-6600
URL: www.apawood.org

This publication is available free of charge from: https://doi.org/10.6028/NIST.SP.1253

4.10.3. Evaluation of Results

1. **To determine lot conformance, return to Section 2.3.7. "Evaluate for Compliance."**

2. **Compliance with the Average Requirement and with the MAV in Table 2-8 "MAVs for Packages Labeled by Length, Width, or Area" is based on the average of multiple measurements on each sheet in the sample.**

   - **Length – two measurements**
   - **Width – two measurements**
   - **Thickness – four measurements**

3. **If the sample from the lot fails the Average Requirement, a statistical test is applied to a negative average error prior to determining if the sample passes or fails.**

(Added 2019)

This publication is available free of charge from: https://doi.org/10.6028/NIST.SP.1253

Structural Plywood Sheets and Wood-Based Structural Panels Worksheet

Product:	**Mill Number and Agency:**	
Labeled Dimensions:	**Address:**	**City/State/Zip:**
Length:		
Width:	**Brand/Grade/Surface:**	**Testing Location:**
Thickness:		

Piece Number	Average Length	Average Width	Average Thickness		Piece Number	Average Length	Average Width	Average Thickness
1.					7.			
Error:					Error:			
2.					8.			
Error:					Error:			
3.					9.			
Error:					Error:			
4.					10.			
Error:					Error:			
5.					11.			
Error:					Error:			
6.					12.			
Error:					Error:			
Total Average:								
Average Error:								

This publication is available free of charge from: https://doi.org/10.6028/NIST.SP.1253

Worksheet for Structural Plywood Sheets and Wood-Based Structural Panels

MAV for Packages Labeled by Length, Width, or Area (Table 2-8)

(Note: Structural Plywood Sheets or Wood-Based Structural Panels of a predetermined dimension is considered a "package" as defined by NIST Handbook 130, "Uniform Packaging and Labeling Regulations).

- **1 m (1 yd) or less in 3 % of labeled quantity.**
- **More than 1 m (1 yd) to 43 m (48 yd) is 1.5 % of labeled quantity.**

Section 1. Compliance with Maximum Allowable Variation

1. Calculate the MAV for labeled thickness = _____. Do any of the minus errors for thickness exceed the MAV?

a. If yes, go to Section 5.

b. If no, go to Section 2.

2. Calculate the MAV for length = _____. Do any of the minus errors for width exceed the MAV?

a.If yes, go to Section 5.

b.If no, go to Section 3.

3. Calculate the MAV for labeled width = _____. Do any of the minus errors for length exceed the MAV?

a. If yes, go to Section 5.

b. If no, go to Section 4.

Section 2. Compliance with the Average Requirement – Thickness

4. Calculate the Average Error for labeled thickness _____. The sample passes this requirement if the Average Error is zero or a positive number. Go to Section 3. If the Average Error is a negative number, go to Step 5.

5. Calculate the Sample Standard Deviation (*s*) and multiply (*s*) by the Sample Correction Factor (*SCF*) for the sample size to obtain the Sample Error Limit (*SEL*). Go to Step 6.

(s) _____ × (*SCF*) _____ = *SEL* _____

6. Disregarding the signs, is the *SEL* in Step 5 larger than the Average Error in Step 4? If yes, the lot passes on thickness. If no, go to Section 3.

Section 3. Compliance with the Average Requirement – Length

7. Calculate the Average Error for labeled length _____. The sample passes this requirement if the Average Error is zero or a positive number. Go to Section 4. If the Average Error is a negative number, go to Step 8.

8. Calculate the Sample Standard Deviation (*s*) and multiply (*s*) by the Sample Correction Factor (*SCF*) for the sample size to obtain the Sample Error Limit (*SEL*). Go to Step 9.

(s) _____ × (*SCF*) _____ = *SEL* _____

9. Disregarding the signs, is the *SEL* in Step 8 larger than the Average Error in Step 7? If yes, the lot passes on length. If no, go to Section 4.

This publication is available free of charge from: https://doi.org/10.6028/NIST.SP.1253

Worksheet for Structural Plywood Sheets and Wood-Based Structural Panels

Section 4. Compliance with the Average Requirement – Width

10. Calculate the Average Error for labeled width _____. The sample passes this requirement if the Average Error is zero or a positive number. Go to Section 6. If the Average Error is a negative number, go to Step 11.

11. Calculate the Sample Standard Deviation (*s*) and multiply (*s*) by the Sample Correction Factor (*SCF*) for the sample size to obtain the Sample Error Limit (*SEL*). Go to Step 12.

***(s)*_____ × (*SCF*) _____ = *SEL* _____**

12. Disregarding the signs, is the *SEL* in Step 11 larger than the Average Error in Step 10? If yes, approve the lot. If no, go to Section 5.

Section 5. Determine Moisture Shrinkage Allowance

If the average error for any dimension (thickness, length, width) is a minus value, or if the MAV is exceeded for any piece, perform a moisture test on each piece to determine if a shrinkage allowance should be applied. Apply the appropriate allowance to each piece, then re-calculate the average error and re-determine compliance with the MAV.

Piece Number	Moisture Content	Moisture Shrinkage Allowance		Piece Number	Moisture Content	Moisture Shrinkage Allowance
1.				7.		
2.				8.		
3.				9.		
4.				10.		
5.				11.		
6.				12.		

Section 6. Action Taken: □ **Lot Rejected** □ **Lot Approved**

Comments:	**Official Name/Signature:**
	Date:

Random Numbers: Enter the numbers as you select them in the top row and reorder them in the bottom row.

(Rev. XX/XX)

This publication is available free of charge from: https://doi.org/10.6028/NIST.SP.1253

Background/Discussion:
Currently there is no test procedure for plywood and wood-based structural panels in NIST HB133. This procedure follows good measuring practices for products sold by linear measure. Over the past several years' states have requested guidance for a test procedure that determines the accuracy of plywood and wood-based structural panels. This procedure was developed with the input from Mr. Steve Zylkowski, (Director, Quality Services Division, Engineered Wood Association [APA]) (APA previously known as the American Plywood Association). When APA changed their name, it was decided to leave the acronym APA because it was so well established.

At the 2018 NCWM Interim Meeting, comments were received from regulators and industry supporting this item as Informational. Mr. Steve Zylkowski (APA) recommended this item remain Informational to await PS1 and PS2 standards that are currently being reviewed. Based on the comments received the L&R Committee recommends this item as Developing to allow NIST to review additional information received from the PS1 and PS2 voluntary standards update.

At the 2018 NCWM Annual Meeting, the Committee reviewed the modified language submitted by NIST OWM on June 26, 2018. In addition Mr. Zylkowski (APA) supports this proposal and provided the Committee with research and supporting documents.

At the 2019 NCWM Interim Meeting several industry representatives stated their support for this item being moved to voting status. No comments were heard from regulators. The Committee feels this item is fully developed and recommends this be a Voting item.

At the 2019 NCWM Annual Meeting it was noted that the PS 2-10 standard should read 2-18 since it was recently updated. NIST received editorial privileges to update PS1-09 if it is updated prior to the 2020 NIST Handbook 133 going to print. If it is not updated, NIST will update it in next year's handbook edition.

Regional Association Comments:
At the WWMA 2018 Annual Meeting, Mr. David Kretschmann (ALSC) and Mr. Steve Zylkowski (APA) gave a presentation and answered technical questions. Ms. Lisa Warfield (NIST OWM) commented that this item is fully developed and ready for vote. Mr. Kurt Floren (Los Angeles County, California) supports the proposal but noted a typographical error in Section 4.XX.2.2 where it noted "Structural Plywood and Oriental Strand Board" should be "Structural Plywood and Oriented Strand Board," which was corrected by the submitter. The Committee believes this item is fully developed and recommends this as a Voting Item with the typographical change noted.

At the 2018 NEWMA Interim Meeting, Mr. Mike Sikula (New York) stated that he still has concerns that these requirements are too onerous from a standards perspective and are not appropriate. He would support the item if the equipment requirements are more reasonable. A calibrated steel linear measure should be an alternative to precision gage blocks and a caliper. As a result, the Committee recommends the item remain as Developing. At the 2019 Annual Meeting there were no comments heard and the Committee recommends this item as a Vote.

At the 2018 SWMA Annual Meeting, Ms. Lisa Warfield (NIST OWM) remarked that there is an editorial change that needs to be made:

> **4.XX.2.2. Moisture Shrinkage Allowance for Structural Plywood and Wood-Based Structural Panels Structural plywood and oriented strand board (OSB) shrink and swell with changes in moisture content. The standardized moisture content for Structural Plywood is 9 % (PS 1-09, "Structural Plywood." Section 5.10, "Dimensional Tolerances and Squareness of Panels)". The equivalent standardized moisture content of OSB is 8 %.**

Mr. Steve Zylkowski (APA) remarked that he has worked closely with NIST to get this item fully developed. He concurred that this item is ready for a Vote. Ms. Christy Cordova (Georgia Pacific) stated this aligns with the manufacturing standard and she also supports this as a voting item.

This publication is available free of charge from: https://doi.org/10.6028/NIST.SP.1253

At the CWMA 2018 Interim Meeting, Mr. Doug Musick (Kansas) commented that he attended the Southern regional meeting, and there were spokespeople there who supported this item, as well as NET-7. The Committee did not have the understanding necessary to recommend a status.

At the 2019 CWMA Annual Meeting, there were not comments heard and the Committee believes this item is fully developed and ready for Voting status.

Additional letters, presentations, and data may have been part of the Committee's consideration and were posted on the NCWM website during the time this item was on the Committee's agenda. To the extent possible, comments and positions from such documents have been summarized in the committee's report along with comments heard during the Committee's hearings.

NET-9 D Recognize the Use of Digital Density Meters

Source:
Missouri (2016)

Purpose:
Allow the use of digital density meters for package checking testing of viscous fluids such as motor oils, diesel exhaust fluid (DEF), and antifreeze.

Item Under Consideration:
Amend NIST Handbook 133 as follows:

> Develop specific test procedures for NIST Handbook 133, "Chapter 3. Test Procedures – For Packages Labeled by Volume" that would recognize the use of digital density meters in lieu of volumetric flasks and thermometers when testing certain viscous fluids such as motor oil, DEF, antifreeze, syrups, etc.

Background/Discussion:
Current test procedures are slow and awkward due to the need of using borosilicate glassware for package checking. Digital density meters are fast, use small samples size (2 ml) and have built in thermometers.

Digital density meters are fast and accurate in comparison with recognized NIST Handbook 133 test procedures for viscous fluids. Using digital density meters equipped with built-in API density tables will not require the cooling samples to 60 °F. There is no need to "wet down" volumetric flasks before each measurement. Most non-food products may be recovered without contamination. Only a small sample size (2 ml) of the product is needed for testing. There is no need for a partial immersion thermometer or volumetric flasks. The current method in "Section 3.4. Volumetric Test Procedures for Viscous Fluids – Headspace" does not work for plastic oblong bottles often used for motor oil. This new test procedure would eliminate the entrapment of air in testing viscous fluids (i.e. motor oil, DEF, antifreeze, syrups, etc.) Well established ASTM and other international standard test methods are available with precision statements.

At the 2016 NCWM Interim Meeting, Mr. Ron Hayes (Missouri) spoke in regard to his submittal of this proposal. The Committee believes this item has merit and requested that the submitter form a focus group to further develop. Mr. Hayes agreed that this item needs have additional data gathered to support the use and accuracy of the digital density meters. The American Petroleum Institute (API) remarked that they would like to assist the task group on this project. The Committee is making this a Developing Item.

At the 2017 NCWM Interim Meeting the submitter Mr. Hayes asked for the states to participate in a round robin to compare the current handbook test procedures with the density meter. The Committee encouraged the submitter to develop a proposal by Fall 2017.

At the 2018 NCWM Interim Meeting, Mr. Ron Hayes (Missouri) gave a presentation regarding this item. Mr. Lou Sakin (Massachusetts) recommended this item be assigned with a specific timetable for development. No other

comments were heard on this developing item. The L&R Committee recommends this item as Developing to allow the submitter to finish developing test procedures and review with NIST/OWM staff.

At the 2018 NCWM Annual Meeting, Mr. Hayes (Missouri) provided an update that he has been doing testing and getting repeatability with his results. Mr. Hayes remarked that when NIST OWM was teaching a NIST Handbook 133- Basic course in Missouri he had an opportunity to use the density meter on some of the test procedures.

At the 2019 NCWM Interim Meeting the submitter of this item stated he is close to having an updated proposal posted to the NCWM website. A Michigan regulator stated his desire to see this item remain developing. The Committee recommends this item remain Developing with the stipulation, that if new language is not provided by the 2019 NCWM Annual Meeting, the item will be withdrawn.

At the 2019 NCWM Annual Meeting Mr. Ron Hayes commented that he has a draft of his proposal on the NCWM L&R supporting document website. Mr. Hayes continues to work with states who use the density meters to develop an item under consideration. He also continues to work on the alpha correction.

Regional Association Comments:
WWMA 2018 Annual Meeting, Ms. Lisa Warfield (NIST OWM) commented that NIST has evidence presented in a paper from 2006 which demonstrates that this equipment does not work in all applications and recommends this be Developing. This paper is on the NCWM website. The Committee recommends this item remain as a Developing Item; however, if a proposal is not submitted by the 2019 Interim Meeting, we recommend the item be Withdrawn.

CWMA 2018 Interim Meeting, Mr. Ronald Hayes (Missouri and submitter) commented that NIST had contacted him regarding earlier testing of digital density meters, and there was some problem with them. He is trying to get the report NIST prepared, and the appendix of the report is missing. That appendix has more information about what items were tested and what the results were. Mr. Hayes commented that the language for the proposal will be fully developed by the January 2019 NCWM Interim Meeting, and ready for consideration by the Committee. He asked the group for input as to how he should write out the proposal – using ASTM method numbers or notating the steps, so there would be no charge for acquiring the ASTM methods. One person recommended writing out the steps. Mr. Craig VanBuren (Michigan) commented that he believes that digital density meters are a great alternative to having glass in the field. He supports seeing proposed language and subsequently moving this item forward. Mr. Charles Stutesman (Kansas) commented that he wants to see steps written out rather than listing ASTM standard methods. Consequently, the Committee recommends the item remain as a Developing item.

At the CWMA 2019 Annual Meeting, Mr. Ron Hayes (Missouri) and submitter of the item presented a draft of the new test procedure for viscous and non-viscous liquids by portable digital density meter. Mr. Hayes hopes to get feedback on this draft to further discuss during the fall regional meetings. Ms. Lisa Warfield (NIST Technical Advisor) asked if Mr. Hayes used a specific digital density meter or if he used different ones. He responded that he used a single meter. Also, is the alpha value table inclusive, or is the intent to add items? Mr. Hayes responded that he wants to add to the alpha value table and cite the reference. Mr. Warfield asked that some products that are very viscous might be problematic. Mr. Chris Guay (Procter and Gamble) commented that he believes there are certain product categories with a lot of variations - shampoo for instance. He believes may be difficult to determine what products you can and cannot use the digital density meter to measure. He further stated that it CANNOT be used for conditioner. Mr. Hayes believes he is nearing completion of building the specification but wants to continue to develop the alpha value table and hopes to have the item ready to consider for Voting. The Committee supports Mr. Hayes efforts.

At the 2019 NEWMA Annual Meeting, Lisa Warfield (NIST Technical Advisor) commented that the developer has submitted a draft proposal and supporting data and is asking for feedback from members. The Committee will consider the details of the proposal at a future NEWMA meeting and it should remain a Developing Item.

At the 2018 SWMA Annual Meeting, Ms. Lisa Warfield (NIST OWM) commented they have tested various products with the digital density meters (soda, viscous products) and there are some issues with testing. A NIST document is available under the NCWM L&R supporting documents that is a comparison document that NIST developed using the density meters in package testing. The density meter works well products that are non-viscous and non-carbonated but does do well with other products. Craig VanBuren (Michigan) remarked that a description of products needs to

This publication is available free of charge from: https://doi.org/10.6028/NIST.SP.1253

be developed as to what works with the density meter. The Committee notes in the Appendix A. that the developer has been given prior deadlines to submit an item. At this time no proposal has been submitted and the Committee is recommending the item be Withdrawn.

Additional letters, presentations, and data may have been part of the Committee's consideration and were posted on the NCWM website during the time this item was on the Committee's agenda. To the extent possible, comments and positions from such documents have been summarized in the committee's report along with comments heard during the Committee's hearings.

This publication is available free of charge from: https://doi.org/10.6028/NIST.SP.1253

OTH – OTHER ITEMS

OTH-1 D Fuels and Lubricants Subcommittee

Source:
NCWM Fuels and Lubricants Subcommittee (2007)

Purpose:
Update NIST Handbook 130, Uniform Fuels and Automotive Lubricants Regulation including major revisions to fuel ethanol specifications. Another task will be to update the Basic Engine and Fuels, Petroleum Products, and Lubricants Laboratory Publication.

Item Under Consideration:
This item is to provide a report on the activities of the Fuels and Lubricants Subcommittee which reports and provides recommendations to the Laws and Regulations Committee. For more information or to provide comment, please contact:

Mr. Bill Striejewske, Chairman of the Fuels and Lubricants Subcommittee
Nevada Department of Agriculture/Bureau of Petroleum Technology
(775) 353-3792, **wstriejewske@agri.state.nv.us**

Background/Discussion:
The Subcommittee met on Sunday, January 13, 2019, at the NCWM Interim Meeting in Charleston, South Carolina to review the agenda items related to fuel and automotive fluid standards appearing before the L&R Committee. There was discussion of the three blocks and two FLR items on the L&R agenda. The meeting also included a very brief update from one focus group working within FALS. A summary of the focus group discussion and some additional information are detailed below.

Renewable Diesel Focus Group: I (Chair Striejewske) stated that this group had been dormant for some time but wanted to withhold a decision to dissolve until CRC had published a report on Renewable Diesel Fuel soon after the National Meeting last July. However, there was nothing in the report that could help the FG move its work forward. I spoke with FG Chair Allan Morrison and he agreed that it was best at the present time to dissolve the group.

Fuel Quality Council Update: Ms. Paige Anderson provided a brief update of their activities. To summarize the Fuel Quality Council is an initiative run by the Fuels Institute to better understand and hopefully improve the relationship between diesel fuel quality and the modern high-pressure common rail diesel engine. The Fuel Quality Council is made up of a diverse group of stakeholders in the industry from OEMs to refiners to additive companies, pipeline and terminal operators down to retailers and fleets. Among the Council's current projects currently underway are (1) an Engine-fuel performance analysis linked to fuel quality; (2) Stakeholder interviews on whether diesel fuel specifications should be changed and the implications of doing so; (3) a best practices guide for maintaining fuel quality throughout the distribution chain; and (4) collecting existing fuel sample data for analysis – and eventually designing our own fuel sampling study. Ms. Anderson also mentioned a Diesel Fuel Quality Workshop to be held February 19-20th in Washington, DC, an event for stakeholders to share the challenges and opportunities regarding

This publication is available free of charge from: https://doi.org/10.6028/NIST.SP.1253

diesel fuel quality facing each sector of the market. More information can be found at their website (www.fuelsinstitute.org) under the "Fuel Quality Council" tab.

Regional Association Comments:
At the WWMA 2018 Annual Meeting the Committee appreciates the efforts of FALS and recommends this item remain as a Developing Item.

At the 2018 CWMA Interim Meeting, Mr. Ron Hayes (FALS Vice-chair) commented that FALS will next convene at the ASTM meeting on Monday, Dec. 10, 2018 at 4 pm in Atlanta, Georgia. If FALS members are not in attendance, they may join the meeting via teleconference. At the CWMA 2019 Annual Meeting there were no comments were heard.

Additional letters, presentations, and data may have been part of the Committee's consideration and were posted on the NCWM website during the time this item was on the Committee's agenda. To the extent possible, comments and positions from such documents have been summarized in the committee's report along with comments heard during the Committee's hearings.

OTH-2 D Packaging and Labeling Subcommittee

Source:
NCWM Packaging and Labeling Subcommittee (2011)

Purpose:
Provide an update of the activities of this Subcommittee which reports to the L&R Committee. The mission of PALS is to assist the L&R Committee in the development of agenda item, NCWM positions and new standards related to packaging and labeling. The Subcommittee will also be called upon to provide important and much needed guidance to the regulatory and consumer packaging communities on difficult questions. PALS will report to NCWM L&R Committee. The Subcommittee is comprised of a Chairperson, eight voting members, and anyone interested in packaging and labeling standards.

Item Under Consideration:
This item is to provide a report on the activities of the Packaging and Labeling Subcommittee which reports and provides recommendations to the Laws and Regulations Committee. For more information or to provide comment, please contact:

> Mr. Chris Guay, Chairman of the Packaging and Labeling Subcommittee
> Procter and Gamble Co.
> (513) 983-0530, **guay.cb@pg.com**

Background/Discussion:
The Package and Labeling Subcommittee (PALS) is comprised of four voting regulatory officials (one from each region) and four voting members from industry (retailers and manufacturers) in addition to its Chairman and NIST Technical Advisor. Mr. Guay, (PALS Chair) reported that work is currently being progressed through monthly webinar meetings and at the NCWM meetings. Members of NCWM can participate in the PALS meetings by contacting Mr. Guay. PALS members are responsible for providing updates at their Regional Meetings. Mr. Guay added PALS will be developing proposals and providing guidance and recommendations on existing proposals as assigned by the NCWM L&R Committee. He stressed the importance of having key federal agencies (FDA, FTC, and USDA) participating.

Mr. Guay reported that PALS is working on a "Recommended Best Practice" document for quantity expressions appearing on the principal display panel (PDP) in addition to the required statement of net quantity has begun development of proposed requirements for packages/products sold exclusively through e-commerce sites, and has and will be submitting comments on behalf of the NCWM to the Federal Register proposals that are related to quantity declarations by federal agencies. In addition, PALS is considering further development of the following items:

This publication is available free of charge from: https://doi.org/10.6028/NIST.SP.1253

- **Additional Net Content Declarations on the Principal Display Panel to Meet U.S. and International Requirements** - Package net contents are most commonly determined by the product form, for example – solid products are labeled by weight and liquid products are labeled by volume. Semi-solid products such as pastes, creams and viscous liquids are required to be labeled by weight in the United States and by volume in Canada.
- **Icons in Lieu of Words in Packages labeled by Count** – Can a clear and non-misleading icon take the place of the word "count" or "item name" in a net content statement? While existing Federal regulation requires regulatory label information to be in "English," the increasing presence of multilingual labels and the growing diversity of the U.S. population suggest more consumers are served with a clear and non-misleading icon.
- **Multipacks and Bundle Packages** - The net content statements for multipacks and bundled packages of individually labeled products can be different based on the approach used to calculate them. The difference is the result of the degree of rounding for dual U.S. customary units and metric declarations. Using two apparently valid but different methods can yield two different results; one net content statement result that provides closer accuracy between the declared metric and U.S. customary declaration, or a different net content result which is more intuitive but less accurate.

At the 2018 Interim Meeting, Mr. Guay reported that the PALS was making good progress on a "Recommended Best Practice" document for quality related statements appearing on the package net contents statement outside of the required statement of net quantity. A completed first draft is expected in late 2018. A "Recommended Best Practice" document is expected to bring uniformity and consistency by providing a reference for these types of label expressions. This document will either be a stand-alone document on the NCWM website or an NCWM publication.

At the 2018 Annual Meeting, Mr. Guay reported that the PALS was expecting to complete the first draft of a "Recommended Best Practice" document in 2018 and would begin to do vetting amongst a group of NCWM volunteers. Once input is received and incorporated, the PALS plans to reach out to FDA to review the content of the document with their compliance organization for further input. In addition, the PALS began discussing the need for clarity of packaging and labeling requirements for products which are sold solely in e-commerce distribution. These products may be modified in design and labeling compared to packages intended for retail shelf sale.

At the 2019 Interim Meeting, Mr. Guay reported that the text of "Recommended Best Practice" was complete except for the inclusion of a few paragraphs. Work is continuing on the illustrative appendix, with graphics support being provided by the NCWM Office. PALS is also starting to define e-commerce product net content labeling requirements beginning with standard packages. PALS would then proceed to discuss random weight and bulk products.

At the 2019 Annual Meeting, Mr. Guay reported that the PALS submitted comments on behalf of NCWM regarding an FSIS proposal to revise its declaration-of-net-quantity regulations. These comments encouraged FSIS to make its requirements aligned with the requirements of the Fair Packaging and Labeling Act. PALS will also be submitting NCWM comments in response to three proposals from Alcohol and Tobacco Tax and Trade Bureau pertaining to net quantity declarations at the end of August 2019. PALS also discussed the content for comments to the Alcohol and Tobacco Tax and Trade Bureau and they will be drafted by mid-August 2019 and submitted at the end of the month

PALS also discussed e-commerce transactions as part of its development of a proposal to cover standard, random, and bulk packages sold on-line for shipment or delivery to the purchaser. PALS plans to draft a proposed regulation covering requirements for the on-line sites which sell these types of products and for products that are received at home by the purchaser. When this proposal has been developed, it will be forwarded to the Laws and Regulations Committee for consideration on its agenda

Regional Association Comments

At the WWMA 2018 Annual Meeting, the Committee appreciates the efforts of PALS and recommends this item remain as a Developing Item.

At the CWMA 2019 Annual Meeting, Mr. Guay (PALS Chair) commented that PALS is working on a number of projects, including labeling requirements for products sold specifically through e-commerce.

NEWMA 2019 Annual Meeting, Mr. Guay (PALS Chair) commented that PALS is currently working on two major projects: 1) statements related to quantity in addition to the net quantity declaration; 2) products sold exclusively through e-commerce and how those should be labeled.

Additional letters, presentations, and data may have been part of the Committee's consideration and were posted on the NCWM website during the time this item was on the Committee's agenda. To the extent possible, comments and positions from such documents have been summarized in the committee's report along with comments heard during the Committee's hearings.

Ms. Michelle Wilson, Arizona | Committee Chair
Mr. Ethan Bogren, Westchester County, New York | Member
Mr. Joel Maddux, Virginia | Member
Mr. John McGuire, New Jersey | Member
Mr. Doug Rathbun, Illinois | Member

Mr. Prentiss Searles, American Petroleum Institute | AMC Representative
Mr. Lance Robertson, Measurement Canada | Canadian Technical Advisor

Ms. Lisa Warfield, NIST OWM | Technical Advisor
Mr. David Sefcik, NIST OWM | Technical Advisor

Laws and Regulations Committee

This publication is available free of charge from: https://doi.org/10.6028/NIST.SP.1253

Appendix A

FLR – 7 Premium Diesel Definition Presentation
Informal Focus Group Report to FALS

Members

Randy Jennings	TN Dept. of Agriculture
Manuch Nikanjam	Chevron
Hind Abi-Akar	Caterpillar
Joan Axelrod	ExxonMobil
Paul Biggerstaff	Baker Hughes
Shawn Broughton	Marathon Petroleum
Jim Bush	Lubrizol
Rick Chapman	Innospec
Jennifer Draper	Motiva
Scott Fenwick`	NBB
Roger Gault	The EMA
Barbara Goodrich	John Deere
Garry Gunter	Phillips 66
Ron Hayes	Missouri Dept. of Agriculture
Dennis Hess	Infineum
Cal Hodge	A2O, Inc. on behalf of Neste
Stuart Johnson	Volkswagon
Alex Kulinowski	Afton Chemical
Tom Livingston	Bosch
Shailesh Lopes	GM
Chuck Richardson	Ford
Prasad Tumati	J Haltermann

Desired Outcome

- Update FALS members
- Address comments from our May 15, 2018 call
- Define path forward

This publication is available free of charge from: https://doi.org/10.6028/NIST.SP.1253

This publication is available free of charge from: https://doi.org/10.6028/NIST.SP.1253

Objective

- Update the NCWM Premium Diesel Definition to align fuels with current requirements of the engines and injection equipment

Background

- The National Conference on Weights and Measures (NCWM) Objective Was to Develop Meaningful Model Language for Laws and Regulations Concerning “Regular” and “Premium” Diesel Fuel So That These Fuels Can Be Accurately and Clearly Identified Through Dispenser Labeling and Other Means

This publication is available free of charge from: https://doi.org/10.6028/NIST.SP.1253

Application

NIST Handbook 130

- "2.2.1. **Premium Diesel Fuel**. - All diesel fuel identified on retail dispensers, bills of lading, invoices, shipping papers, or other documentations with terms such as premium, super, supreme, plus, or premier must conform to the following requirements."

Current Definition

- Cetane Number: 47 Minimum
- Lubricity: 520 Micron
- Low Temperature Operability: Requiring the ASTM Guideline Using the Tougher LTFT Method
- Stability: 80% Reflectance, 180-Minute Test

This publication is available free of charge from: https://doi.org/10.6028/NIST.SP.1253

Categories Considered

Leaders Identified

- Aromatics
- Cetane Number
- Cleanliness
- Corrosion
- Energy Content
- Filter Blocking Tendency
- Injector Deposit
- Low Temperature Operability
- Lubricity
- Metals
- Stability

Criteria and Process

- Properties must have
  - A functional benefit (with supporting technical data)
  - A standard test method (ASTM or other)
  - Statistically significant difference, if a minimum ASTM specification exists, at least the reproducibility of the test method
- Decisions are made by consensus
- This group makes a recommendation only, states make the final decision

Proposed Properties

- Cetane Number, ASTM D613: 47 minimum
  - *ASTM D613 is the referee method; however, the following methods may be used to determine cetane number:*
    - *D6890 (IQT)*
    - *D7170*
    - *D7668*
- Corrosion, NACE TM0172-2015: B+ rating minimum
  - *NACE TM0172 is the referee method; however, ASTM D7548 may be used.*
- Filter Blocking Tendency, ASTM D2068, procedure B: 2.2 maximum
- Injector Deposit, CEC DW-10 B: 2 % maximum power loss
- Low Temperature Operability, Cloud Point, LTFT, or a restricted CFPP: ASTM D975 Guideline
  - *CFPP should be limited to a maximum of 6 C below the cloud point of the fuel.*
- Lubricity Wear Scar Diameter, ASTM D6079: 460-micron maximum

  ASTM D6079 is the referee method; however, ASTM D7688 may be used.

Proposed Application

NST Handbook 130

- 2.2.1. Premium Diesel Fuel. -- All diesel fuels identified on retail dispensers~~, bills of lading, invoices, shipping papers, or other documentation~~ with ~~terms such as premium, super, supreme, plus, or premier~~ **an additional term incorporated directly in the product or grade name that differentiates the fuel and implies the fuel provides properties that exceed minimum specification limits or performance properties** must conform to the following **minimum** requirements.
- ***EXCEPTION NOTE: It is permissible to include a clearly-defined fuel property that has a functional benefit, established test method, and a level, if stated as such. Example is winterized diesel which provides an operability benefit and is discussed in detail in ASTM D975 as a recommended guideline.***

This publication is available free of charge from: https://doi.org/10.6028/NIST.SP.1253

This publication is available free of charge from: https://doi.org/10.6028/NIST.SP.1253

Cetane Number

Shawn Broughton

- Benefits were demonstrated previously and is part of the current definition.
- Methods
  - D613 (referee)
  - D6890 (IQT)
  - D7170
  - D7668
- Keep the existing requirement (47)
- New test methods have been added.

Corrosion

Rick Chapman

- OEM's continue to experience corrosion in their diesel fuel systems and report it to be one of their top concerns
- OEM's generally believe that the NACE TM-0172 test suits their needs at a B+ or better rating
- Fuel steel corrosion should be a part of the revised NCWM Premium Diesel Specification
- NACE TM0172-2015, "Determining Corrosive Properties of Cargoes in Petroleum Product Pipelines" is the de facto petroleum industry test and the method preferred by most OEM's
- Premium diesel results in nearly no corrosion.

Injector Deposit

Joan Axelrod

- Benefits
  - Helps maintain or restore lost power and combustion efficiency
  - Reduces deterioration in exhaust gas and particulate emissions
  - Helps prevents premature hardware failure & drivability issues
- Test method to determine additive effectiveness: CEC DW-10B
- Level: <2% power loss in keep-clean mode
- Premium keeps injectors clean
- Additive use can be used as enforcement

Low Temperature Operability

Dennis Hess

- Continue requirement of Cloud Point, LTFT fuel test properties
  - **Add 'restricted CFPP'**
  - (CP-CFPP) ≤ 6°C
  - Limiting CFPP to a maximum of 6°C below diesel fuel cloud point aligns LTO protection of HDDs with LTFT
- As for CP or LTFT, 'restricted CFPP' must meet ASTM 10th percentile temperature for the geographic location

  Example: Tennessee in January
- Supporting Data
  - Team Report
  - ASTM Recommendation

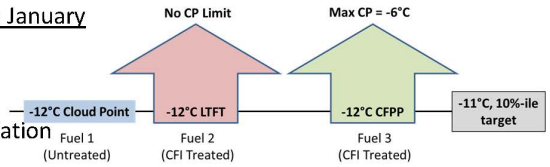

This publication is available free of charge from: https://doi.org/10.6028/NIST.SP.1253

This publication is available free of charge from: https://doi.org/10.6028/NIST.SP.1253

Filter Blocking Tendency

Hind Abi-Akar

- Benefits
  - Reduce the occurrence of premature filter plugging on vehicles
  - Support injectors performance and durability
  - Potentially reduce frequent dispensing filter changes at the final dispensing point
- ASTM D2068, procedure B
- Proposed limit ≤2.2

Lubricity

Paul Biggerstaff

- Now in D975
- Injection equipment is the same for regular and for premium
- Choices
  - Drop
  - Keep the same as ASTM but with limit of 550 (average of two tests of the same sample) independent of r and R
  - **Change to 460 (513 limit)**

This publication is available free of charge from: https://doi.org/10.6028/NIST.SP.1253

Minority Report

- Corrosion; Garry Gunter
- Filter Blocking Tendency; Garry Gunter
- Injector Deposit; Garry Gunter
- Low Temperature Operability; Garry Gunter
- Lubricity; Manuch Nikanjam, Joan Axelrod, Garry Gunter

Stability

Scott Fenwick

- Benefits
  Longer storage
  Prevents formation of insoluble and Polymers
- Current requirements and method are outdated.
- Proposed Methods and limits
  S15 without biodiesel
  - 60-min min. by D7545 for S15 without biodiesel

  Biodiesel Containing Diesel
  - 8-hr min. induction by EN 15751 for B100 blend stock
    - or
  - 24-hr min. induction by EN 15751 for up to B5
  - 20-hr min. induction by EN 15751 for B6 to B20
- **Do not pursue (Supporting Data?)**

This publication is available free of charge from: https://doi.org/10.6028/NIST.SP.1253

Aromatics

Hind Abi-Akar

- Affects
  - White Smoke
  - Energy Content
  - Emissions
  - Elastomers
- Fungible fuel, no additive or other ways to adjust
- Cannot be adjusted at the terminal or dispenser
- **DO NOT PURSUE** at this time

Cleanliness

Roger Gault

- Water and particulate levels are important
- Should apply to all diesel fuel
- Methods are available
- Many suggest that 10-micron dispenser filters should be required
- **DO NOT PURSUE** *(Supporting data does not exist to set levels)*

This publication is available free of charge from: https://doi.org/10.6028/NIST.SP.1253

Energy Content

Joan Axelrod

- Cannot be adjusted at the terminal or dispenser
- Biodiesel, renewable diesel, GTL, etc. introduce complication
- **DO NOT PURSUE** at this time

Metals

Shailesh Lopes

- Benefits
  - Protect the catalyst
  - Injector deposit
- After treatment systems are designed anticipating certain efficiency loss due to low levels of metal exposure. Fuel with metal levels below detectable limits **will not translate to customer benefit**.
- Any metal limits if require by the OEMs should be part of the ASTM specifications.
- **DO NOT PURSUE** at this time

This publication is available free of charge from: https://doi.org/10.6028/NIST.SP.1253

Group's Report

- A complete and separate Word file containing reports from each category team is available.

Summary Comments
Beverly Michels, BP

- Recommendations are not data based.
- < 1.6 for Filter Blocking Tendency is not supported by data. Limit should be < 2.2 or higher.

Summary Comments
Philip Guillemette, Flint Hills Resources

- Alternative corrosion test should be allowed.
  - ASTM D7548 (Accelerated Iron Corrosion Test)
- Alternative lubricity test should be allowed.
  - ASTM D7688
- The Filter Blocking Tendency test procedure (ASTM D2068) may indicate failures unrelated to fuel manufacturing.
  - Since most low flow retail dispensers have 10 micron filters and high flow dispensers have 30 microns filters, the selection of ASTM D2068 following procedure B with a 1.6 micron maximum may indicate failures downstream of fuel manufacturing and distribution that are not detected/prevented by retail fuel dispenser filters.

This publication is available free of charge from: https://doi.org/10.6028/NIST.SP.1253

This publication is available free of charge from: https://doi.org/10.6028/NIST.SP.1253

THIS PAGE INTENTIONALLY LEFT BLANK

Report of the Specifications and Tolerances (S&T) Committee

Ms. Rachelle Miller, Committee Chair
Wisconsin

This publication is available free of charge from: https://doi.org/10.6028/NIST.SP.1253

INTRODUCTION

This is the final report of the Committee on Specifications and Tolerances (S&T) (hereinafter referred to as the "Committee") for the 104th Annual Meeting of the National Conference on Weights and Measures (NCWM). The report is based on the Interim Report offered in the NCWM Publication 16, "Committee Reports," testimony at public hearings, comments received from the regional weights and measures associations and other parties, the addendum sheets issued at the Annual Meeting, and actions taken by the membership at the voting session of the Annual Meeting.

Table A identifies the agenda and appendix items. The agenda items are identified in the report by Reference Key Number, Item Title, and Page Number. The item numbers are those assigned in the Interim Meeting agenda. Voting items are indicated with a "**V**," or if the item was part of the Voting Consent calendar by the suffix "**VC**" after the item number. Items marked with an "**I**" after the Reference Key Numbers are Information items. Items marked with an "**A**" after the Key Numbers are Assigned items. The Assigned designation indicates the Committee's intention to have the item assigned to an NCWM TG for further development. Items marked with a "**D**" after the Key Numbers are Developing items. The Developing designation indicates that an item, while it has merit, may not be adequately developed for action at the national level. Items marked "**W**" have been withdrawn from consideration. Items marked with a "**W**" will generally be referred to the regional weights and measures associations because they either need additional development, analysis, and input or did not have sufficient Committee support to bring them before the NCWM. Table B identifies the acronyms for organizations and technical terms used throughout the report, and Table C provides a summary of the results of the voting on the Committee's items and the report in its entirety.

This report contains recommendations to amend the National Institute of Standards and Technology (NIST) Handbook 44, 2019 Edition, "Specifications, Tolerances, and Other Technical Requirements for Weighing and Measuring Devices." Proposed revisions to the handbook are shown in **bold face print** by ~~**striking out**~~ information to be deleted and **<u>underlining</u>** information to be added. New items proposed for the handbook are designated as such and shown in **bold face print**.

Note: The policy of NIST and NCWM is to use metric units of measurement in all of their publications; however, recommendations received by NCWM technical committees and regional weights and measures associations have been printed in this publication as submitted. Therefore, the report may contain references to inch-pound units.

Subject Series List

This publication is available free of charge from: https://doi.org/10.6028/NIST.SP.1253

This publication is available free of charge from: https://doi.org/10.6028/NIST.SP.1253

Table A
Table of Contents

This publication is available free of charge from: https://doi.org/10.6028/NIST.SP.1253

This publication is available free of charge from: https://doi.org/10.6028/NIST.SP.1253

This publication is available free of charge from: https://doi.org/10.6028/NIST.SP.1253

Table A
Glossary of Acronyms and Terms

Acronym	Term	Acronym	Term
ABWS	Automatic Bulk Weighing System	NEWMA	Northeastern Weights and Measures Association
AAR	Association of American Railroads	NIST	National Institute of Standards and Technology
API	American Petroleum Institute	NTEP	National Type Evaluation Program
CNG	Compressed Natural Gas	OIML	International Organization of Legal Metrology
CIM	Coupled-in-Motion	OWM	Office of Weights and Measures
CWMA	Central Weights and Measures Association	RMFD	Retail Motor Fuel Dispenser
EPO	Examination Procedure Outline	S&T	Specifications and Tolerances
GMM	Grain Moisture Meter	SD	Secure Digital
GPS	Global Positioning System	SI	International System of Units
HB 44	NIST Handbook 44	SMA	Scale Manufacturers Association
HB 130	NIST Handbook 130	SWMA	Southern Weights and Measures Association
LMD	Liquid Measuring Devices	TC	Technical Committee
LNG	Liquefied Natural Gas	TG	Task Group
LPG	Liquefied Petroleum Gas	USNWG	U.S. National Work Group
MMA	Meter Manufacturers Association	VTM	Vehicle Tank Meter
MDMD	Multiple Dimension Measuring Device	WIM	Weigh-in-Motion
NCWM	National Conference on Weights and Measures	WWMA	Western Weights and Measures Association

Table B
Summary of Voting Results

Reference Key Number	*House of State Representatives*		*House of Delegates*		*Results*
	Yeas	*Nays*	*Yeas*	*Nays*	
Consent Calendar: AWS-3. BLK-3, BLK-4, BLK-5, LMD-3, LPG-2, MFM-2, MFM-4, EVF-4, TXI-1, GMA-2	39	0	71	0	Adopted
SCL-1	38	0	77	0	Adopted
BCS-1	37	1	66	1	Adopted
LMD-5	38	1	68	1	Adopted
HGM-6	36	0	67	1	Adopted
VTM-1	16	22	34	36	Returned to Committee
OTH-5	25	14	42	27	Returned to Committee
To Accept the Report	Voice Vote				Adopted

This publication is available free of charge from: https://doi.org/10.6028/NIST.SP.1253

This publication is available free of charge from: https://doi.org/10.6028/NIST.SP.1253

THIS PAGE INTENTIONALLY LEFT BLANK

This publication is available free of charge from: https://doi.org/10.6028/NIST.SP.1253

GEN – GENERAL CODE

GEN-1 I G-A.1. Commercial and Law-Enforcement Equipment. and G-S.2. Facilitation of Fraud.

Source:
Arizona, Florida, Maine, Michigan and Cambridge, Massachusetts (2018); Skimmer TG (2019)

Purpose:
To prevent access and tampering by unauthorized persons to any area of the device where electronic financial transactions occur, credit card information is obtained, and or personal information is stored or transmitted.

Item Under Consideration:
Amend NIST Handbook 44 Liquid Measuring Device Code by adding the following new paragraph:

UR.4.2. Security for Retail Motor-Fuel Devices (RMFD). Any retail motor fuel device capable of conducting customer initiated electronic financial transactions must be secured to substantially restrict the ability of unauthorized persons to manipulate it to obtain payment information that could be used to commit fraud. The following is a non-exhaustive list of ways that restriction of such manipulation may be accomplished:

(a) A physical lock, locking device, or a physical securing device that will restrict access to the electronic financial transaction compartment of the RMFD. A lock, locking device or securing device shall not be manipulated with commonly available tools. A lock shall not allow the use of a universal key. A universal key is a key that is readily available in the market or can be easily purchased in a hardware or common retail store. A single non-universal key for all of the like devices at a retail facility or for all of the like devices at a chain of retail facilities is acceptable or;

(b) Electronic alarming or disabling of the equipment if unauthorized access is attempted or;

(c) Advanced payment acceptance technologies that increase protections against the theft of payment information itself or do not allow access to such information in a form that may be used to commit fraud or;

(d) Another security solution that has been approved by the local or state weights and measures jurisdiction with authority.

(Added 20XX)

Background/Discussion:
Additional information can be found in the **2018 NCWM Annual Meeting Report**.

A significant potential financial impact to consumers and credit-issuing companies has been recognized by weights and measures jurisdictions and prompts the need to offer more protection to both buyer and seller in these transactions. The current design of these devices offers little to no barrier to fraud through theft of credit information. A general belief is that the current design of retail motor-fuel dispensers (RMFDs), in most cases, already violates paragraph G.S.2. by facilitating easy access to allow installation of these fraudulent card reading devices. Therefore, some NCWM members are advocating stronger means to be implemented to decrease the potential for fraudulent activity with these devices.

The Florida Department of Agriculture and Consumer Services estimates that, on average, each skimmer results in 100 counterfeit cards, each of which are used to make $1,000 in fraudulent purchases. In other words, a single skimmer typically leads to $100,000 in theft. This is recognized as a nationwide problem that causes millions of dollars in fraudulent charges to consumers, device owners, and banking institutions each year. One approach to mitigate the

This publication is available free of charge from: https://doi.org/10.6028/NIST.SP.1253

detrimental effect on consumers is to implement upgraded security measures on the weighing and measuring devices that fall within the guidelines of NIST HB 44.

One possible opposing argument to this proposal is that these preventative measures should be developed as user requirements instead of in specifications, but this is intended to be a long-term solution. The State of Florida has enacted legislation to require device users to add security measures. They have found that most owner/operators have chosen to use security seals or non-standard locks on the dispensers and that 85 % of the skimming equipment being found is in devices with user-applied security measures. User-applied security measures are not as effective as electronic security and/or unique, tamper proof locks.

Manufacturers of these devices may argue that the cost to make the necessary upgrades will be prohibitive. This item is not intended to be retroactive and the cost of the additional security measures will be universal and not place any manufacturer at a competitive disadvantage. Several manufacturers of electronic security systems designed for retail motor-fuel dispensers have products available and at least three new manufacturers of low-cost systems have recently come into the marketplace (at least one of them is working with OEM manufacturers and the security systems are being integrated into newly manufactured dispensers).

During the 2018 NCWM Interim Meeting, the Committee heard testimony regarding the installation of fraudulent credit card reading devices on retail motor-fuel dispensers and the resulting millions of dollars in fraudulent charges to consumers, device owners, and banking institutions each year. In general, testimony provided to the Committee acknowledged the problem presented by the illegal use of "skimmers"; however, there was no consensus as to whether or not this is an issue to be addressed by weights and measures officials.

The Committee agreed to make this an "Assigned" item and is requesting the formation of a TG to address this issue. The Committee identified stakeholders as likely members of such a TG as individuals from convenience store associations, meter manufacturers, retailers, petroleum marketers' association, weights and measures regulators (one from each region), and the NIST OWM.

At the 2018 NCWM Annual Meeting, the Committee received an update on this item from the Chairman of the NCWM Skimmer TG, Mr. Hal Prince (Florida). Mr. Prince reported work is ongoing on this item and much of the TG discussion has revolved around two key questions:

1. Is this a weights and measures issue that NCWM should take on?

2. If so, does weights and measures have the authority to require manufacturers and users of commercial weighing and measuring equipment to take whatever steps needed to ensure such equipment prevents unauthorized access to non-metrological changes to the equipment?

Mr. Prince further reported that members of the TG were recently surveyed and asked these questions, but results are not yet available. It was hoped more information would be available to report at the 2019 NCWM Interim Meeting.

During the 2019 NCWM Interim Meeting, the Skimmer TG presented the Committee a revised proposal developed to address issues of fraud due to skimmer technology. The Skimmer TG's revised proposal would add a new User Requirement paragraph, UR.4.2., to the Liquid-Measuring Devices Code in NIST HB 44 and eliminate the original proposed paragraphs G-A.1. and G-S.2. in the General Code.

The Committee was also informed that this item is not intended to be retroactive and the cost of the additional security measures will be universal and would not place any manufacturer at a competitive disadvantage. Several manufacturers of electronic security systems designed for retail motor-fuel dispensers have products available and at least three new manufacturers of low-cost systems have recently come into the marketplace. At least one of these electronic security systems manufacturers is known to be working with OEM manufacturers of RMFDs to integrate the security systems into newly manufactured dispensers.

This publication is available free of charge from: https://doi.org/10.6028/NIST.SP.1253

During the 2019 Interim Meeting open hearings, the Committee heard comments to Agenda Item GEN-1 and the Skimmer TG provided an update of their activities and actions. The comments heard during the open hearing and Skimmer TG updates are summarized below:

The Skimmer TG polled its members and determined that the issue was within weights and measures purview by a vote of 11-2. Acting on these results, the TG drafted new language during their work meetings to replace the original proposal that made changes to the General Code in NIST Handbook 44 with a new proposal to add the new paragraph, UR 4.2. Security for RFMDs to the Liquid-Measuring Devices Code in NIST HB 44 as the Item Under Consideration.

Questions were raised whether this revised proposal was intended to be retroactive or nonretroactive. The TG Chair, Mr. Prince stated that a determination has not been made but it would be a decision to be made by the TG. During the Committee's work session, the committee members agreed that this item should be given an Informational status to allow for full vetting of the new proposal by the NCWM membership.

At the 2019 NCWM Annual Meeting, the Committee received comments on the item from Mr. Prince. Mr. Prince stated that the Skimmer TG met routinely and developed the proposal to its fullest before handing it over to the Committee. The original proposal was revised by deleting the initial proposed changes to General Code and to only include changes to the LMD Code. Mr. Prince requested that the Committee maintain Informational status for another cycle so that additional vetting and input could be made. The TG would like to continue work as it believes information should be distributed as an outreach effort to the community.

The Committee heard comments in opposition to the item. Mr. Charlie Stutsman (Kansas) and Mr. Jim Willis (New York) questioned whether the proposal falls under the scope of weights and measures. Mr. Constantine Cotsoradis (Flint Hills Resources) and Mr. Kurt Floren (Los Angeles County, California) commented that they were concerned with the original General Code proposal, although both were supportive of the new alternative LMD code User Requirement proposal. Mr. Russ Vires (Mettler Toledo LLC) speaking on behalf of the SMA opposes the item but stated that when the SMA last met they reviewed the original General Code proposal. Mr. Vires stated that the alternative Liquid-Measuring Devices code proposal carrying through another NCWM cycle will allow for the addition of clarity to this proposal.

The Committee agreed to maintain Informational status for this item.

Regional Association Comments:
At the WWMA 2018 Annual Meeting, Mr. Lou Straub (Fairbanks Scales) speaking on behalf of SMA, commented that SMA opposes this item and recommends it be withdrawn. Speaking on behalf of Fairbanks, he noted that Fairbanks understands the problem and the desire for weights and measures officials to get involved but is not sure NIST Handbook 44 is the right place to address this.

The WWMA also heard comments from Mr. Brent Price (Gilbarco, Inc.), who expressed concerns about proposed paragraph G-S.2.part (b). There are references to the use of "universal key", "master key", etc.; however, it is not clear to what these terms refer to. NCWM Chairman, Mr. Brett Gurney (Utah) stated the TG assigned to the development of this item is working on this issue and will continue to develop the item prior to bringing back recommendations for the membership to consider.

The WWMA S&T Committee reviewed the proposed language in the Item Under Consideration during its work session and offered the following suggestions for the TG to consider as it further develops this item:

- The WWMA S&T Committee is concerned that the new language proposed for inclusion in G-S.2. Facilitation of Fraud may dilute the core paragraph. They suggest that, should the TG proceed with recommending this language for inclusion in NIST Handbook 44, the TG should consider an alternative, possibly moving the new language into a separate paragraph, perhaps in a new sub-paragraph G-S.2.1. or a separate paragraph altogether.
- The WWMA S&T Committee also believes the additional language proposed under G-A.1. Commercial and Law-Enforcement Equipment part (b) should be moved into a separate subsection of G-A.1., perhaps a G-A.1.(d).

This publication is available free of charge from: https://doi.org/10.6028/NIST.SP.1253

WWMA recommended the item be maintained on the NCWM S&T Committee agenda as an "Assigned" item to allow the TG to further develop it.

At the NEWMA 2018 Interim Meeting, Mr. Mike Sikula (New York) reported during the Committee's open hearing, he supports weights and measures field officials looking for, and then informing law enforcement on the presence of skimmers as part of their normal routine inspections. However, he does not believe this item belongs in NIST Handbook 44. Mr. Sikula also reported that without a complete technical understanding of the ever-changing methods used in skimming, we may inadvertently make changes that could actually facilitate fraud. Mr. Walt Remmert (Pennsylvania) supported Mr. Sikula's comments and believes the responsibility for detection and mitigation of this illegal practice should fall on the device owner.

Mr. Jimmy Cassidy (Massachusetts) reported he acknowledges that the skimmer problem is significant across the country. Mr. Cassidy noted that this item is currently assigned to the task group that is working together with industry and recommended that this item remain an assigned item. Mr. Eric Golden (SMA) reported that their position is on record as being opposed to this item and recommends the proposal's withdrawal. NEWMA believes it would be remiss to withdraw this item while the task group is working on it and recommends this Item remain with an Assigned status on the NCWM S&T Committee agenda.

At the NEWMA 2019 Annual Meeting, Mr. Sikula reported during the Committee's open hearings he does not believe this item belongs in NIST HB 44. Mr. Vires (Mettler Toledo LLC) speaking on behalf of the SMA commented that the SMA opposes the item and does not believe it is within the scope of weights and measures and that the SMA recommends this item be withdrawn. NEWMA recommended this as an information item.

At the SWMA 2018 Annual Meeting, the S&T Committee heard from the Scale Manufacturers Association (SMA) that they had previously opposed the item before it was an assigned item. Mettler Toledo LLC commented they were encouraged to see it designated as Assigned. A representative of Arkansas asked for an update from the TG. A representative of Florida and leader of the TG commented that the members of the TG had been divided and that the latest effort was to look at three options:

1. continue to develop the item;
2. continue education; or
3. withdraw the item.

SWMA agreed with maintaining the "Assigned" status of the item and is looking forward to recommendations from the TG.

At the CWMA 2018 Interim Meeting, Mr. Craig Van Buren (Michigan), a member of the task group, provided an update and asked for input during the Committee's open hearings. Several comments were heard that this item may be more appropriate as a User Requirement and should possibly be moved to the LMD code. Concerns were raised that this is not a weights and measures issue. CWMA agrees with maintaining the "Assigned" status and looks forward to the Task Group's continued work on this item.

At the CWMA 2019 Annual Meeting, Mr. Vires, speaking on behalf of the SMA during the Committee's open hearings, reported opposition to this item and recommended it be withdrawn. The rationale being that it is not a weights and measures issue. Ms. Diane Lee (NIST OWM) recommended that the states review their own statutes.

Additional letters, presentations, and data may have been part of the Committee's consideration and were posted on the NCWM website during the time this item was on the Committee's agenda. To the extent possible, comments and positions from such documents have been summarized in the Committee's report along with comments heard during the Committee's hearings.

This publication is available free of charge from: https://doi.org/10.6028/NIST.SP.1253

SCL – SCALE

SCL-1 V S.1.1.1. Digital Indicating Elements. and UR.2.10. Primary Indicating Elements Provided by the User.

(This Item was adopted)

Source:
City of Cambridge, and Towns of Wellesley, Sharon, Massachusetts (2019)

Purpose:
Harmonize with OIML R-76 by providing a minimum height of measurement units, regardless of the size of the indicating screen.

Item Under Consideration:
Amend the NIST HB 44 Scales Code as follows:

S.1.1.1. Digital Indicating Elements

(a)…

(b)…

(c) For electronic cash registers (ECRs) and point of sale systems (POS systems) the display of measurement units shall be a minimum of 9.5 mm (3/8 in.) in height.

[Nonretroactive as of January 1, 2021]

(Added 2019)

(Amended 1992, 2008, and 2019)

And

UR.2.10. Primary Indicating Elements Provided by the User. – Video display terminals and other user provided indicating elements on scales interfaced with a cash register in a POS system shall comply with the minimum height requirements specified in part (c) of paragraph S.1.1.1. Digital Indicating Elements.

[Nonretroactive as of January 1, 2021]

(Added 2019)

Background/Discussion:
Some point-of-sale systems in use have 7" inch (177.8 mm) customer display indicators with a weight display that is 6.90 mm in height, making it difficult for the consumer to read. The height of the weight display must conform to a regulation regardless of the size of the indicating screen to enable the consumer to view the weight display on the indicator.

Scale manufacturers noted that the operator may elect to supply the weighing system with an LCD having scalable characters that do not comply with the proposed size requirements. This user requirement is necessary in addition to the proposed specification requirement to ensure that scale operators do not make incorrect modifications to weighing systems or use non-compliant equipment.

During the 2019 NCWM Interim Meeting, the Committee heard opposing comments from the SMA concerning the proposal. The SMA provided the Committee a revised version of the proposal and recommended it replace the one that had been submitted. The SMA's recommended version of part "c" of paragraph S.1.1.1. included a nonretroactive effective date of January 1, 2021. The SMA requested its proposal as shown below be given a Voting status.

This publication is available free of charge from: https://doi.org/10.6028/NIST.SP.1253

S.1.1.1. Digital Indicating Elements

(a)…

(b)…

~~***(c) Except for electronic cash registers (ECRs) and point of sale systems (POS systems) on direct sale digital devices that display primary indications the numerical figures of the primary indications on the customer side must be at least 9.5 mm(0.4in.) in height. These indications must be NON-SCALABLE in font size.***~~
~~***[retroactive as of January 1, 20XX]***~~

~~***(d)***~~***(c) For electronic cash registers (ECRs) and point of sale systems (POS systems) the display of measurement units shall be*** ~~***at least***~~ ***a minimum of 9.5 mm (0.4in.) in height.*** ~~***These indications must be NON-SCALABLE in font size.***~~
[Nonretroactive as of January 1, 20~~XX~~21]

And

UR.2.10. Primary Indicating Elements Provided by the User. – Electronic cash registers (ECRs) and point of sales systems (POS systems) where the primary ~~***Primary***~~ ***indicating elements*** ~~***that***~~ ***are not the same as the primary indicating elements provided by the original equipment manufacturer (e.g. video display monitors) shall comply with the following:***

(a) On digital devices that display measurement units ~~***primary indications***~~ ***during direct sales to the customer, the numerical figures displayed to the customer shall be a minimum of 9.5 mm (0.4 in) in height.***

The Committee heard support for the SMA changes from other manufacturers and regulators. Additional comments included:

- a reference to a lack of character height specification in the American Disabilities Act;
- a suggestion that other device codes specifications should be reviewed for consistency; and
- a recommendation that the item should be given separate nonretroactive effective dates - for software and hardware with the software date relativity short and the hardware date extended.

In written comments and recommendations provided to the Committee in advance of the Interim Meeting, NIST OWM provided the following with respect to this item:

> OWM concurs with comments heard at the 2018 Fall Regional Weights and Measures Association Meetings pertaining to a question regarding the retroactive or nonretroactive nature of bullet points (c) and (d). These proposed additions to S.1.1.1. are presented in italicized font yet they are identified as "retroactive". This formatting is confusing and raises questions about the intent of the submitter. If these proposed new requirements are to be adopted, NIST OWM suggests they be nonretroactive to provide manufacturers with sufficient time to accommodate the necessary changes to the design of their devices.
>
> The proposed new subparts; (c) and (d) of paragraph S.1.1.1. address a minimum size of displayed indications, whereas existing paragraph S.1.1.1.a and b currently addresses a different topic: requirements for digital zero displays and what the zero display represents in terms of scale divisions. Since the new proposed additions to S.1.1.1. address a topic not directly related to the existing requirement, NIST OWM questions whether the proposed new subparts would be more appropriately located elsewhere in the Scales Code.
>
> NIST OWM believes the language used in the proposed new subparts "c" and "d" is unclear and possibly confusing. NIST OWM's interpretation for the intent of what is being proposed is that all values displayed on

This publication is available free of charge from: https://doi.org/10.6028/NIST.SP.1253

the primary indicating element(s) in ECRs and POS systems must be a minimum height of 9.5 mm. In addition, the proposal requires that the display of indications on the customer's side of the scale on all other types of weighing devices must meet the same minimum height of 9.5 mm. OWM also notes that as currently stated in the proposal, the size of the indicated values would not be permitted to be "scaleable" and therefore could not be smaller than 9.5 mm regardless of the size of the display area. This requirement as stated in the proposal could be interpreted that these indications could not be enlarged beyond the stated 9.5 mm.

OWM also noted that the proposed new User Requirement "UR.2.10." refers to "Primary indicating elements that are not the same as the primary indicating elements provided by the original equipment manufacturer" and states that those indicating elements shall comply with the displayed indications minimum size requirement. OWM believes the language used in this proposed new user requirement to be confusing. OWM's interpretation of the intent of the proposal is that all primary indications are to comply with minimum size requirements. In an attempt to make clear the different indicating elements in which the requirement was intended to apply, OWM developed an amended version of paragraph U.R. 2.10. and provided it to the Committee for consideration.

A final concern identified by OWM is that specific NIST HB 44 device code requirements supersede General Code requirements. OWM therefore believes there is a potential risk that owners/users of weighing equipment used in direct sale applications may try to use this new requirement for minimum size of displayed indications to support a claim that indicating elements no longer have to comply with paragraph G-UR.3.3. Position of Equipment. We believe there is a need to clarify that the proposed minimum height of 9.5 mm is not intended to affect the application of G-UR.3.3. and that both requirements need to be met.

During open hearings, the Committee heard support for the item from a member representing the item's submitter, the SMA, and the State of Arkansas. A comment was made by NIST OWM voicing the need for additional wording to the UR to provide clarification that the requirement applies to all primary indications in a system. NIST OWM also pointed out that since the proposed user requirement is shown in italics, a nonretroactive effective date needs to be added.

During its work session, the Committee agreed to replace proposed U.R.2.10. with the version developed by OWM and include the nonretroactive date of January 1, 2021. The Committee also agreed:

1. to replace proposed subpart (c) of paragraph S.1.1.1. with the version developed and provided to the Committee by the SMA:

2. change the U.S. measurement equivalent of 9.5 mm from 0.4 inches to 3/8 inches; and

3. assign a nonretroactive date of January 1, 2021 to subpart (c) of paragraph S.1.1.1.

All changes agreed to by the Committee are reflected in the proposal shown in the Item Under Consideration. The Committee also assigned the item a Voting status.

Regional Association Comments:
At the WWMA 2018 fall Annual Meeting, the S&T Committee heard no comments on this item during its open hearings. In its work sessions, a few points were identified for the submitter to consider as the item is further developed:

- Terms such as "NON SCALABLE" need additional clarification.
- In determining an appropriate retroactive date, the importance was recognized for fully vetting this item and ensuring that those affected by the proposal have adequate time to modify their equipment.
- The submitter may want to consider making this a nonretroactive requirement, noting that systems already in use must comply with general requirements for clarity and visibility.
- Discussions during the work session indicate that some in the audience misread the proposal as a "nonretroactive" proposal because of the italicized type.

The WWMA understands the submitter is continuing to develop this item. The WWMA agrees the item has merit and recommended this be included as a Developing Item on the NCWM S&T Committee's agenda.

At the NEWMA 2018 fall Interim Meeting, Mr. Cassidy (Massachusetts, Submitter) reported during the Committee's open hearings the changes proposed are intended to require a scale's displayed indications to comply with an "absolute" font size, even when the display area dimensions are decreased. This would translate that the displayed weight indications would maintain a minimum size regardless of the dimension of the display area on the indicator. NEWMA members from Massachusetts, New York, and New Jersey voiced their support for this item.

Mr. Eric Golden (Cardinal Scales) reported that if this is intended to be a retroactive proposal, some older devices may not be able to comply. Mr. Cassidy stated that he feels a software update will allow devices to conform.

NEWMA believes this item is fully developed and recommended this be a Voting item on the NCWM S&T Committee agenda.

At the NEWMA 2019 spring Annual Meeting, Mr. John Barton (NIST OWM) raised a question regarding the submitter's intent for the new User's Requirement proposed in this item and the lack of any effective date for that requirement. There is a question whether the submitter intended the User Requirement have a nonretroactive effective date listed under the requirement since that language is shown in italicized font. The NEWMA recommends this item remain with "Voting" status on the NCWM S&T Committee agenda and recommends a review of the retroactive/nonretroactive status of the proposed new User Requirement and desired effective dates. NEWMA also recommends appropriate (editorial) changes be completed by the NCWM S&T Committee to address these issues as necessary.

At the SWMA 2018 fall Annual Meeting, the SWMA heard from Arkansas and Florida, both of which supported the item. NIST OWM commented they had not had an opportunity to fully review the item but that the User Requirement mentions non-OEM and it is not clear how it would apply to not built-for-purpose devices (i.e., a generic monitor or video screen). The SMA has not reviewed the item. Fairbanks Scales questioned the definition of non-scalable used in the item. A representative of the National Cash Register Company (NCR) responded and explained this is related to the proportions of font size and display area and that in some instances, font size cannot be adjusted in response to any change in the display area.

The SWMA agrees with the item and recommends it as a Voting item.

At the CWMA 2018 fall Interim Meeting, CWMA members were not sure what was meant by "direct sale digital devices" and that there may be a potential conflict between (c) and (d) and requiring indications to be non-scalable may create unforeseen issues. The CWMA believes the language needs further clarification, and this item should be developing.

At the CWMA 2019 spring Annual Meeting, Mr. Vires (Mettler Toledo LLC) speaking on behalf of the SMA, voiced support for this item and stated the SMA appreciates the language changes incorporated by the NCWM S&T Committee.

Additional letters, presentations, and data may have been part of the Committee's consideration and were posted on the NCWM website during the time this item was on the Committee's agenda. To the extent possible, comments and positions from such documents have been summarized in the Committee's report along with comments heard during the Committee's hearings.

This publication is available free of charge from: https://doi.org/10.6028/NIST.SP.1253

This publication is available free of charge from: https://doi.org/10.6028/NIST.SP.1253

SCL-2 I S.1.8.5. Recorded Representations, Point of Sale Systems

Source:
Kansas and Minnesota (2017)

Purpose:
Provide consumers the same opportunity to be able to easily verify whether or not tare is taken on items weighed at a checkout stand using a POS system, as is currently afforded them when witnessing items being weighed and priced in their presence using other scales in the store.

Item Under Consideration:

[Note: At the 2019 NCWM Annual Meeting, the Committee agreed with the assigned TG to change the status of this proposal from Assigned to Informational. The TG presented the Committee with two versions for revising the original proposal. Both versions are shown below. The Committee accepted both versions with the intent of soliciting feedback from the 2019 Fall Regional Weights and Measures meetings on which version is preferable.]

Amend NIST Handbook 44, Scales Code as follows:

RETROACTIVE VERSION:

S.1.8.5. Recorded Representations, Point-of-Sale Systems. – The sales information recorded by cash registers when interfaced with a weighing element shall contain the following information for items weighed at the checkout stand:~~.~~[1]

(a) the net weight;~~[1]~~

(b) the unit price; ~~[1]~~[2]

(c) the total price; and

(d) the product class or, in a system equipped with price look-up capability, the product name or code number.

In addition, the tare weight shall be recorded by all cash registers interfaced with a weighing element for items weighed at the checkout stand as of January 1, 20XX.

(Amended 20XX)

NONRETROACTIVE VERSION:

S.1.8.5. Recorded Representations, Point-of-Sale Systems. – The sales information recorded by cash registers when interfaced with a weighing element shall contain the following information for items weighed at the checkout stand[1]:

(a) the net weight;~~[1]~~

(b) the unit price; ~~[1]~~[2]

(c) the total price; ~~and~~

(d) the product class or, in a system equipped with price look-up capability, the product name or code number~~.~~**; and**

(e) the tare weight.
[Non-retroactive as of January 1, 20XX]

(Amended 20XX)

FOOTNOTES 1 AND 2 FOR EITHER VERSION (RETROACTIVE OR NONRETROACTIVE):

[1]Weight values shall be **adequately defined as gross, tare, and/or net upon any two or more of these values appearing on the receipt. Acceptable abbreviations include, but are not limited to, G & GR (gross), T & TA (tare), and N & NT (net). The unit of weight shall be** identified ~~by~~ **as** kilograms, kg, grams, g, ounces, oz, pounds, or lb. ~~*The "#" symbol is not acceptable.*~~
~~*[Nonretroactive as of January 1, 2006]*~~

[2]For devices interfaced with scales indicating in metric units, the unit price may be expressed in price per 100 grams.

(Amended 1995**,** ~~and~~ 2005, **and 20XX**)

*THE FOLLOWING TEXT CAN BE INSERTED AS REPLACEMENT TO THE ABOVE ONCE THE PRINTING OF THE TARE WEIGHT INFORMATION BECOMES ENFORCEABLE:

[1]Weight values shall be **adequately defined as gross, tare, and/or net. Acceptable abbreviations include, but are not limited to, G & GR (gross), T & TA (tare), and N & NT (net). The unit of weight shall be identified** ~~by~~ **as** kilograms, kg, grams, g, ounces, oz, pounds, or lb. ~~*The "#" symbol is not acceptable.*~~
~~*[Nonretroactive as of January 1, 2006]*~~

[2]For devices interfaced with scales indicating in metric units, the unit price may be expressed in price per 100 grams.

(Amended 1995**,** ~~and~~ 2005, **and 20XX**)

Background/Discussion:
The submitters of this proposal state that it will benefit consumers by enabling them to see at a glance that tare is being taken on the commodities they purchase. It would also educate the public about tare and make them better and more aware consumers. Additionally, it is purported that retailers would benefit because this proposal would aid their quality control efforts behind the counter and at the cash register. Retailers would be able to see that their employees are taking tare on packages, and that the tare employees take is the appropriate tare. Finally, this proposal would aid weights and measures officials investigating complaints about net contents of item by creating written proof of how much tare was taken on a given package or transaction.

Scale manufacturers will need to modify software and label and receipt designs before the effective date. Retailers with point of sale systems and packaging scales may feel pressured to update software or purchase new devices in response to consumer demand for tare information on labels and receipts. The amount of paper needed to print customer receipts may increase depending on the formatting of the information and the size of the paper being used. Some retailers may not want consumers to have this information as it will allow consumers and weights and measures officials to hold them accountable and would be written proof tare was not taken when, and if, that happens.

During the 2018 NCWM Interim Meeting, the Committee heard from Mr. Loren Minnich (Kansas) who commented that the item will benefit consumers and asked the Committee to move the item forward as a voting item. Many comments both in support of and in opposition to the proposal were heard. The Committee also received a written recommendation asking the Committee to consider modifying the proposal to: (1) require the tare weight and/or the gross weight be printed on the receipt; (2) clarify printed weight values must be clearly and definitely identified as gross, tare, and/or net weights (as required by the General Code); and (3) move text currently in a footnote to the paragraph into the body of the paragraph for ease of reference.

This publication is available free of charge from: https://doi.org/10.6028/NIST.SP.1253

This publication is available free of charge from: https://doi.org/10.6028/NIST.SP.1253

During the Committee's work session, the committee members reviewed all information received and agreed to move the item forward as a "Voting" item without change.

During the 2018 NCWM Annual Meeting, the Committee agreed to assign the further development of this item to an NCWM TG and established that the goal of this TG should be to determine how to provide consumers (and operators) with the information necessary, whether on a receipt or displayed on the POS system itself, to verify that charges for items weighed at checkout are based on net weight, similar to the opportunity provided them by retail-computing scales used in direct sale applications.

The Committee also received several comments in opposition, including a comment from Mr. Russ Vires (Mettler-Toledo, LLC), speaking on behalf of the SMA, stating that the SMA opposes the agenda item and feels it would be too costly to implement with little benefit. Additionally, the Committee received written comments, including those from Ms. Elizabeth K. Tansing, on behalf of the Food Marketing Institute (FMI), opposing the item and requesting that the Committee withdraw the proposal. During the Committee's work session, the proposal was amended to only include changes to paragraph S.1.8.5. and to include a nonretroactive enforcement date of January 1, 2020.

The Committee received numerous comments on this item suggesting additional work is needed to further develop the proposal and recommending a new TG made up of regulatory officials, food marketing representatives, POS software programmers, NIST, and others. Two of the original submitters of the item, Ms. Julie Quinn (Minnesota) and Mr. Minnich spoke in favor of assigning the item to a work group; one noting that the complexities of packaging are more involved today than first realized, indicating the need for this proposal to be looked at more in depth.

The Committee also received numerous written letters from the grocery store industry opposing the item and requesting that the Committee withdraw it to include: the North Carolina Retail Merchants Association, Florida Retail Federation, South Carolina Retail Association, (FMI), and others. In consideration of the number of comments received on this item in support of its further development by a work group, the Committee agreed to recommend this item be assigned to an NCWM TG.

At the 2019 NCWM Interim Meeting, the Chairman of the NCWM POS Tare TG, Mr. Minnich, provided an update of the TG's activities since it first formed following the 2018 NCWM Annual Meeting. He reported the main topics of discussion thus far have been:

- whether the addition of proposed part (e) to paragraph S.1.8.5., which adds "tare weight" to the list of required information printed on a receipt should remain nonretroactive, as submitted, or be changed, per NIST OWM's suggestion, to retroactive with an effective date ten years from the date of adoption; and
- which value should be added to the receipt, "tare" or "gross" weight.

Mr. Minnich recommended this item remain in an Assigned status given members of TG have been unable to reach a consensus on these issues. Cost of compliance is a concern. The Committee, in consideration of the comments received on this item, agreed with the recommendation of the POS Tare TG Chairman to maintain the Assigned status of the item to allow the TG more time for further discussion and development.

During the 2019 NCWM Annual Meeting, the POS Tare TG Chairman provided the Committee with an update on the TG's progress and presented two amended versions of S.1.8.5. and associated footnotes for the Committee to consider. Those two versions are shown under the Item Under Consideration.

The Chair of the assigned TG reported that members of the TG believe both versions of the amended S.1.8.5. are fully developed, but they were unable to agree on which version should be presented for final consideration. Both versions are being offered so that feedback can be solicited from the fall regional weights and measures associations. It is hoped this feedback will help the Committee to decide on the most favorable version.

Regional Association Comments:
At the WWMA 2018 fall Annual Meeting, an update was provided by NCWM Chairman Mr. Brett Gurney (Utah) who reported the NCWM has established a TG, chaired by Mr. Minnich, to address this item. In its open hearings, the WWMA S&T Committee heard from Mr. Lou Straub (Fairbanks), speaking on behalf of the Scale Manufacturers

This publication is available free of charge from: https://doi.org/10.6028/NIST.SP.1253

Association (SMA), who stated the SMA opposes this item since regulators verify the tare values in POS systems are accurate. The SMA feels the proposal would provide little or no benefit to the consumer. The SMA will review the item at its November meeting and will reevaluate its position after the work group makes its recommendations. The WWMA recommended the item be maintained on the NCWM S&T Committee agenda as an Assigned item to allow the TG to further develop it.

At the NEWMA 2018 fall Interim Meeting, Mr. Mike Sikula (New York) reported during the Committee's open hearings opposition of this item. Mr. Sikula stated that he does not see any benefit and believes that just because there is a tare on the receipt, it does not mean that the tare is correct. He also stated that he feels it will lead to consumer confusion. Mr. John McGuire (New Jersey) reported his opposition to this item.

At the NEWMA 2019 spring Annual Meeting, Mr. Sikula reported during the Committee's open hearings opposition to this item. Mr. Sikula believes this will place an all-around burden on inspectors with no benefit. Mr. Vires (speaking on behalf of the SMA), commented that the SMA opposes this item and believes inspectors are already sufficiently regulating tare. NEWMA recommended this item continue to be developed as an assigned item.

At the SWMA 2018 fall Annual Meeting, the SWMA heard from Mr. Doug Musick (Kansas) that this was an Assigned item. The NCWM Chairman remarked that the TG just recently started meeting to discuss this item. The Scale Manufacturers Association opposes the item at this time. SWMA concurred with the Assigned status and looks forward to future proposals from the TG.

At the CWMA 2018 fall Interim Meeting, a representative from Kansas reported during the Committee's open hearings that this was an Assigned item. The NCWM Chairman remarked that the task group just recently started meeting to discuss this item. The SMA reported that they oppose the item at this time. The CWMA looks forward to future proposals from the task group and recommended this as an assigned item.

At the 2019 spring CWMA Annual Meeting, Mr. Minnich, Chair of the NCWM POS TG, recommended the item remain as "assigned" and indicated the TG will give an update at the 2019 NCWM Annual Meeting.

Mr. Musick commented about scale operators using these devices by sliding items across the scale at a speed that does not allow the weight to display long enough for consumers to fully observe the weighing operation. Mr. Vires, speaking on behalf of the SMA, opposes the item because tare is routinely verified by regulators.

Additional letters, presentations, and data may have been part of the Committee's consideration and were posted on the NCWM website during the time this item was on the Committee's agenda. To the extent possible, comments and positions from such documents have been summarized in the Committee's report along with comments heard during the Committee's hearings.

SCL-3 A Sections Throughout the Code to Include Provisions for Commercial Weigh-in-Motion Vehicle Scale Systems

Source:
Rinstrum, Inc. and Right Weigh Innovations (2016)

Purpose:
Recognize commercial Weigh-in-Motion vehicle scale systems in NIST HB 44.

Item Under Consideration:
Amend NIST Handbook 44 Scales Code as follows:

S.1. Design of Indicating and Recording Elements and of Recorded Representations.

…

This publication is available free of charge from: https://doi.org/10.6028/NIST.SP.1253

S.1.1.1. Digital Indicating Elements

(a) A digital zero indication shall represent a balance condition that is within ± ½ the value of the scale division.

(b) A digital indicating device shall either automatically maintain a "center-of-zero" condition to ± ¼ scale division or less, or have an auxiliary or supplemental "center-of-zero" indicator that defines a zero-balance condition to ± ¼ of a scale division or less. A "center-of-zero" indication may operate when zero is indicated for gross and/or net mode(s).

[Nonretroactive as of January 1, 1993]

Weigh-in-Motion Vehicle Scales Zero or Ready Indication.

Amend NIST Handbook 44 Automatic Bulk Weighing Systems Code as follows:

A. Application

A.1. General. – This code applies to ~~**automatic bulk**~~ weighing systems, ~~**that is, weighing systems**~~ **capable of** ~~**adapted to the automatic**~~ **automatically** weighing ~~**of a commodity in**~~ successive drafts of **a bulk commodity without human intervention.** ~~**predetermined amounts automatically recording the no-load and loaded weight values and accumulating the net weight of each draft.**~~
(Amended 1987 **and 20XX**)

S. Specifications

S.1. Design of Indicating and Recording Elements and Recorded Representations.

S.1.1. Zero Indication. ~~**Provisions**~~ **An Automatic Bulk Weighing System (ABWS)** shall ~~**be made to**~~ indicate and record a no-load reference value and, if the no-load reference value is a zero value indication, to indicate and record an out-of-balance condition on both sides of zero.

(Amended 20XX)

…

…

…

S.1.5. Recording Sequence. – ~~**Provision**~~ **An automatic bulk weighing system** shall ~~**be made so that**~~ **indicate** all weight values ~~**are indicated**~~ until ~~**the completion of the**~~ recording of the indicated value **is completed**.

(Amended 20XX)

S.1.6. Provision for Sealing Adjustable Components on Electronic Devices. – Provision shall be made for applying a security seal in a manner that requires the security seal to be broken before an adjustment can be made to any component affecting the performance of the device.

S.1.7. No Load Reference Values – An automatic bulk weighing system shall indicate and record weight values with no load in the load-receiving element. No load reference values must be recorded at a point in time when there is no product flow into or out of the load receiving element. Systems may be designed to stop operating if a no load reference value falls outside of user designated parameters. If this feature is designed into the system then the no load reference value indicated when the system

This publication is available free of charge from: https://doi.org/10.6028/NIST.SP.1253

is stopped must be recorded, an alarm must activate, weighing must be inhibited, and some type of human intervention must be required to restart the system after it is stopped.

(Added 20XX)

S.1.8. Loaded Weight Values – An automatic bulk weighing system shall indicate and record loaded weight values for each weighment.

(Added 20XX)

S.1.9. Net Weight Values – An automatic bulk weighing system shall calculate and record net weight for each weighment.

(Added 20XX)

S.1.10. Net Weight Accumulation – An automatic bulk weighing system shall accumulate and record the sum of all net weight values for all weighments performed during a weighing process.

(Added 20XX)

S.3. Interlocks and ~~Gate Control~~Product Flow Control.

S.3.1. ~~Gate Position~~Product Flow Control. ~~Provision~~ **An automatic bulk weighing system** shall ~~be made to~~ clearly indicate to the operator **product flow status** ~~the position of the gates leading directly~~ to and from the ~~weigh hopper~~**load receiving element. Many types of equipment can be used to control the flow of product into and out of a load receiving element automatically including but not limited to gates, conveyors, augers, robots, pipes, tubes, elevators, buckets, etc.**

(Amended 20XX)

S.3.2. Interlocks. – Each automatic bulk weighing system shall have operating interlocks to provide for the following:

(a) Product cannot be cycled and weighed if the weight recording element is disconnected or subjected to a power loss.

(b) **can only** ~~cannot print~~ **record** a weight if ~~either of the gates~~ **equipment controlling product flow to or from the load-receiving element is in a condition which prevents product entering or leaving the load receiving element**~~. leading directly to or from the weigh hopper is open~~**.**

(c) A "low paper" sensor, when provided, is activated.

(d) The system will operate only in the proper sequence in all modes of operation.

(e) When an overfill alarm is activated, the system shall indicate and record an overfill condition.

(Amended 1993 **and 20XX**)

S.3.3. Overfill ~~Sensor~~And Interference Detection.

(a) An automatic bulk weighing system must have a means to detect when ~~The~~ **the**~~ weigh hopper~~ **load-receiving element** ~~shall be equipped with an~~ **is** overfill**ed. When an overfill condition exists** ~~sensor which will cause the feed~~ **product flow to the load receiving element must be stopped,** ~~gate to close~~ **an alarm must activate**, ~~activate an alarm, and inhibit~~ weighing **must be inhibited** until the overfill condition has been corrected**, and some type of operator intervention must be required to restart the system**. **An alarm could be many things including a flashing light, siren, horn, flashing computer screen, etc. The intent of an alarm is to make the operator aware there is a problem which needs corrected.**

(Added 1993) **(Amended 20XX)**

This publication is available free of charge from: https://doi.org/10.6028/NIST.SP.1253

(b) ~~**If the system is equipped with a**~~ **Downstream storage devices and other equipment, permanent or temporary,** ~~**lower garner or surge bin, that garner shall also**~~ **which have the potential to interfere with weighment when overfilled or not functioning properly must have a means to prevent interference. When interference exist the system must stop, an alarm must activate, product flow must stop, weighing must be inhibited until the interference has been corrected, and some type of operator intervention is required to restart the system.** ~~**be equipped with an overfill sensor which will cause the gate of the weigh hopper to remain open, activate an alarm, and inhibit weighing until the overfill condition has been corrected.**~~

[Nonretroactive as of January 1, 1998]

(Amended 1997 **and 20XX**)

N. Notes

N.1. Testing Procedures.

N.1.1. Test Weights. – The increasing load test shall be conducted using test weights equal to at least 10 % of the capacity of the system:

(a) on automatic ~~**grain**~~ bulk-weighing systems installed after January 1, 1984 **used to weigh grain**; and

(b) on other automatic bulk-weighing systems installed after January 1, 1986.

(Amended 1987**, and 20XX)**

UR. User Requirements

UR.4. System Modification. – **Components of** ~~**T**~~**t**he **automatic bulk** weighing system, shall not be modified except when the modification has been approved by a competent engineering authority, preferably that of the engineering department of the manufacturer of the scale, and the official with statutory authority having jurisdiction over the scale.

(Amended 1991 **and 20XX**)

And amend NIST Handbook 44 Appendix D – Definitions as follows:

automatic bulk weighing system. – A weighing system **capable of** ~~**adapted to the automatic**~~ **automatically** weighing ~~**of bulk commodities in**~~ successive drafts of **a commodity without operator intervention.** ~~**predetermined amounts, automatically recording the no-load and loaded weight values and accumulating the net weight of each draft.**~~ **[2.22]**

Background/Discussion:
Note: The most recent updated version provided in 2018 is that which is shown in Item under Consideration for this item. To view previous versions of the proposal, refer to the Committee's 2016 and 2017 Final Reports.

The following rationale was offered by the submitter of this item for proposing changes to the NIST HB 44 ABWS Code:

- There are many systems in use that don't meet the definition for a "scale" or an "ABWS" or anything else in NIST Handbook 44. These changes will make it easier for regulators/inspectors to determine if a system should be evaluated as an "ABWS".
- The wording "automatic bulk weighing systems" should not be used in the definition of the same.
- The "no-load" and "loaded weight" recordings are important, but they are specifications and should not be included in the application code.

This publication is available free of charge from: https://doi.org/10.6028/NIST.SP.1253

- The current code does not clearly define at what level of automation a system would be considered an ABWS versus a scale with some accessory equipment (hopper, tank, etc.). This is an attempt to more clearly distinguish which systems should be considered ABWSs.
- Human intervention could be many things. Some examples include, but are not limited to, pushing a reset button, turning power off then back on, typing a password, or entering a statement into a system log. The intent with including the term "human intervention" is to not include all systems which have a high degree of automation, only the ones that cycle repeatedly and can potentially operate without anyone present to observe weighing malfunctions.
- There are many types of load receiving elements that will work with an ABWS to include, but are not limited to, tanks and hoppers; so the previous language referring to hoppers was removed and replaced with the generic but accurate term "load receiving element".
- The old language implied separate sensors (e.g., indicators) were required. Newer systems have already bypassed the use of separate sensors and utilize the weight indications to identify an overfilled condition, similar to how the indications are used to regulate product flow into the load receiving element for some devices. Concerns for this approach have been raised for situations when an indicator is not functioning properly. That is a legitimate concern, but my reply then is: What is the backup for an indicator not indicating properly on any other type of device? This is something we know happens with other devices and commonly may not be detected until a device inspection and test is completed. Thus, one reason routine inspections and testing are required.
- Many types of equipment can be used to control the flow of product into and out of a load receiving element automatically, including, but not limited to, gates, conveyors, augers, robots, pipes, tubes, elevators, and buckets. Examples would be a conveyer delivering product; in such a case, the recording element should not record if the conveyer is still moving, or in the case of a pneumatic transfer tube, the recording element should not record if the blower forcing air through the tube is still operating. Therefore, the old language referring to gates was removed and replaced with more generic terminology which can be applied to any equipment used to control product flow, not just gates.
- Many types of equipment can be used for downstream commodity storage including, but not limited to, hoppers, tanks, bins, flat storage, trucks, totes, rail cars, and pits. The language referring to "lower garner", "surge bin", etc., has been removed and replaced with more descriptive terms, such as "downstream storage devices" to allow for all potential types of product handling equipment.
- A downstream storage device itself may not interfere with the weighing process directly, but it also cannot create a situation in which an overfill condition or some other malfunction of the equipment interferes with the weighing process. An example would be a grain storage hopper located under a weigh hopper in a position which, when grain is mounded up above the storage hopper, the grain touches the bottom of the weigh hopper and interferes with the weighing process. For this example, if the storage hopper can be lowered far enough below the weigh hopper so that the mounded grain cannot touch the weigh hopper when it reaches its' maximum potential height then it would not need the capability to detect an overfill condition. The same scenario would apply to a truck parked under the load receiving element or a conveyer under the load-receiving element. Wording was added to ensure interference does not occur and if it does that the system activates controls to prevent weighing errors.

The Committee received updates on this item by its submitter, Mr. Doug Musick (Kansas) at the NCWM Interim and Annual Meetings of 2016 and 2017. The Committee agreed at each of these meetings to maintain the Developing status of the item to provide Mr. Musick the opportunity to fully develop the proposal.

At the 2018 NCWM Interim Meeting, the Committee received comments from Mr. Musick, submitter of the item. Mr. Musick asked the Committee to keep the item in a Developing status, as there are changes being made to the item based on comments and feedback received from recent regional meetings. During the Committee's work session, it was agreed to keep the item Developing as requested by the submitter.

This publication is available free of charge from: https://doi.org/10.6028/NIST.SP.1253

The Committee did not take comments during open hearings on Developing items at the 2018 NCWM Annual Meeting except to grant the submitter of a Developing item an opportunity to provide an update on the progress made to further develop the item(s) since the 2018 NCWM Interim Meeting. Mr. Loren Minnich (Kansas) gave an update on the Developing item to the Committee. Mr. Minnich stated that he or Mr. Musick plan on giving presentations at 2018 regional meetings to provide more detail on the item. Kansas hopes to have this item fully developed so it can be presented for vote next year.

NIST OWM provided written recommendations and comments regarding this item as feedback to the submitter and as part of its analysis of the S&T Committee's 2018 agenda items.

Additional information can be found in the 2018 S&T Committee Final Report.

The Committee agreed to carryover this item on its 2019 agenda in a Developing status and looks forward to being able to consider a final completed version.

In written comments and recommendations provided to the Committee in advance of the 2019 NCWM Interim Meeting, NIST OWM provided the Committee the following points concerning this item:

- OWM views the changes proposed to paragraph A.1. as expanding the scope of the current Automatic Bulk Weighing Systems Code to encompass types of systems not previously considered an ABWS.

- While OWM agrees with the concept of updating the current code to pave the way for its application to newer automated weighing systems, OWM believes the current draft proposal is not sufficiently developed enough to be considered for adoption.

- Critical parts of the NIST Handbook 44, Appendix D definition of "automatic bulk weighing system" and paragraph A.1. of the ABWS Code that are proposed for deletion provide the unique and distinguishing operational features of these systems and are, therefore, very significant in identifying ABWS and are imperative for determining the application of the correct NIST HB 44 code.

- "Loaded weight value" (paragraph S.1.8.), "weighing process" (paragraph S.10.), and "weighment" (paragraphs S.1.8., S.1.9., and S.1.10) in this proposal are ambiguous terms that need to be clearly defined.

The changes proposed to paragraph S.3.3.(a) and (b) need additional work. For example, it is important to specify in (a) that product flow to the load-receiving element must automatically stop rather than be stopped. Also, the terminology "other equipment" needs better clarification in the first sentence proposed for sub-paragraph (b). Additional language is needed to clarify the proper application of these two subparagraphs.

At the 2019 NCWM Interim Meeting, Mr. Musick (submitter of the item) requested the Committee designate this item either "Developing" or "Informational" given the written comments the Committee received from CompuWeigh Company and NIST OWM in advance of the 2019 Interim Meeting. Mr. Musick reported he believes this item has merit. Automatic bulk weighing systems can provide greater accuracy in weighing bulk commodities that don't flow well when fed into or discharged from a hopper. The number of automatic weighing systems in the commercial marketplace is increasing and some of the more current systems don't seem to fit the application section of any particular NIST HB 44 code. This "newer" equipment needs to be addressed somewhere in NIST HB 44. Designating this item as "developing" or "informational" will provide time needed to address the concerns noted in the comments provided by CompuWeigh Company and NIST OWM.

At the 2019 NCWM Annual Meeting, the Committee was told by the submitter that there was no new information to update; although, Mr. Minnich would be working to further develop this item for the state of Kansas. The Committee agreed to maintain this proposal as a Developing Item.

Regional Association Comments:
At the WWMA 2018 fall Annual Meeting open hearings, a presentation from Mr. Minnich (submitter) was provided on the proposal. After clarifying with Mr. Minnich that there have been changes to the proposal, Mrs. Tina Butcher

(NIST OWM) noted OWM has not yet had the opportunity to review and analyze the proposal but looks forward to doing so.

WWMA acknowledged that additional review by OWM, SMA, and others will be taking place on the revised proposal. However, having no specific suggestions for areas that need work, didn't feel it appropriate to designate it as Developing. Consequently, WWMA recommends the item be designated as a voting item on the NCWM S&T Committee's agenda. WWMA asks that Mr. Minnich's presentation be included with the WWMA's report on the WWMA's website.

At the NEWMA 2018 fall Interim Meeting, during the Committee's open hearings, no comments were heard. Hearing no opposition or discussion on this item, NEWMA believes this item is fully developed and recommended this as a Voting item.

At the NEWMA 2019 spring Annual Meeting. Mr. Russ Vires (Mettler Toledo LLC) speaking on behalf of the SMA, reported the SMA takes no position on this item. Mr. John Barton (NIST OWM) commented that ABWS devices are unique and have specific characteristics identified in the Application section of the ABWS Code and that, in this proposal, these characteristics have been taken out of the Applications section of the ABWS Code. He believes that these changes may permit the ABWS Code to be applied to other devices/systems not intended to be evaluated under this HB 44 Code. NEWMA recommended that the item remain Developing on the NCWM S&T Committee agenda.

At the SWMA 2018 fall Annual Meeting, the SWMA received a presentation and comments from the submitter explaining that he was trying to modernize the code with systems being found in service. Mr. Richard Suiter (Richard Suiter Consulting) commended Mr. Doug Musick (submitter) on his work. The SMA commented that it had not reviewed the proposal but will do so at its next meeting. NIST OWM commented that this NIST HB 44 Code was written for a certain type of device and that the changes being recommended in this proposal would circumvent the reason that this Code was originally developed to address these unique devices and how they operate. NIST OWM also commented that the concerns of the submitters could be addressed through amendments to the NIST Handbook 44 Scale Code or perhaps through the development of a new separate Code. A representative of Growth Energy commented that the item would be reviewed by the National Feed and Grain Association.

The SWMA recommended the submitter work through the comments and continue to develop the language and address all concerns.

At the CWMA 2018 fall Interim Meeting, Mr. Minnich gave a presentation to CWMA describing the proposed changes to the ABWS Code. Mr. Suiter suggested an editorial change to the first sentence of S.1.7. to read as follows:

> "No Load Reference Values – An automatic bulk weighing system shall indicate and record weight values**, other than zero,** with no load in the load-receiving element.

The submitter agreed with the suggested editorial change. The CWMA believes this item is fully developed and ready for voting.

At the CWMA 2019 spring Annual Meeting, Mr. Vires (speaking on behalf of the SMA), reported during the Committee's open hearings, SMA took no position on this item. Ms. Diane Lee (NIST OWM) stated the changes proposed to paragraph A.1. are seen as expanding the scope of the current NIST HB 44 ABWS Code to encompass types of systems not previously considered as ABWS. While OWM agrees with the concept of updating the current Code to pave the way for its application to newer automated weighing systems. OWM believes the current proposal, as drafted, is not sufficiently developed enough to be considered for adoption. The CWMA recommended this as an Information item because the item has merit. The submitter (Kansas) reported there are no plans to develop it further.

Additional letters, presentations, and data may have been part of the Committee's consideration and were posted on the NCWM website during the time this item was on the Committee's agenda. To the extent possible, comments and positions from such documents have been summarized in the Committee's report along with comments heard during the Committee's hearings.

This publication is available free of charge from: https://doi.org/10.6028/NIST.SP.1253

This publication is available free of charge from: https://doi.org/10.6028/NIST.SP.1253

AWS – AUTOMATIC WEIGHING SYSTEMS

AWS-3 V S.3.2. Load Cell Verification Interval Value.

(This item was adopted)

Source:
NTEP Weighing Sector (2019)

Purpose:
Correct inconsistency between device codes dealing with compliance of the v_{min} to "d" relationship formula when a complete scale undergoes NTEP temperature testing.

Item Under Consideration:
Amend NIST Handbook 44 Automatic Weighing Systems Code as follows:

S.3.2. Load Cell Verification Interval Value. – The relationship of the value for the load cell verification scale interval, v_{min}, to the scale division d for a specific scale installation shall be:

$$v_{\min} \leq \frac{d}{\sqrt{N}}$$, where N is the number of load cells in the scale.

Note: When the value of the scale division d differs from the verification scale division e for the scale, the value of e must be used in the formula above.

This requirement does not apply to complete weighing/load-receiving elements or scales which satisfy all the following criteria:

- ***the complete weighing/load-receiving element or scale has been evaluated for compliance with T.7.1. Temperature under the National Type Evaluation Program (NTEP);***
- ***the complete weighing/load-receiving element or scale has received an NTEP Certificate of Conformance; and***
- ***the complete weighing/load-receiving element or scale is equipped with an automatic zero-tracking mechanism which cannot be made inoperative in the normal weighing mode. (A test mode which permits the disabling of the automatic zero-tracking mechanism is permissible, provided the scale cannot function normally while in this mode.)***

[Nonretroactive as of 2020

(Amended 2019)

Background/Discussion:
NTEP received an inquiry from a manufacturer of an Automatic Weighing System (AWS) regarding the requirement of satisfying the v_{min} relationship formula when the complete instrument was evaluated to the full temperature range -10 °C to 40 °C (14 °F to 104 °F). The manufacturer questioned why there was an exception to comply with the formula in the Scales Code and not in the Automatic Weighing Systems Code.

To respond to this inquiry, Mr. Darrell Flocken (NTEP Administrator) researched the history leading to the adoption of this formula in NIST HB 44 and determined the following points:

This publication is available free of charge from: https://doi.org/10.6028/NIST.SP.1253

- The v_{min} relationship formula was adopted and added to the Scales Code in NIST HB 44 based on the adoption of S&T Agenda Item 320-3 during the 1993 NCWM Annual Meeting.
- At the time of the adoption, the three criteria providing an exemption to the requirement were not part of the original adopted recommendation.
- During the 1996 NCWM Annual Meeting, the S&T Committee's agenda included a voting item (i.e., Item 320-6) to amend Scales Code paragraph S.5.4. to exempt complete scales and weighing elements from having to comply with the v_{min} formula providing three conditions are met.
- The item was adopted, and the following text, identifying the three conditions, was added to Scales code paragraph S.5.4. in 1997 and remains today as part of the paragraph.

  This requirement does not apply to complete scales and weighing elements which satisfy the following criteria:

  1. The complete weighing/load-receiving element or scale has been evaluated for compliance with T.N.8.1. Temperature under the National Type Evaluation Program (NTEP);
  2. The complete weighing/load-receiving element or scale has received an NTEP Certificate of Conformance; and
  3. The complete weighing/load-receiving element or scale must be equipped with an automatic zero-setting mechanism which cannot be made inoperative in the normal weighing mode. (A test mode which permits the disabling of the automatic zero-setting mechanism is permissible, provided the scale cannot function normally while in this mode.)

A discussion of this issue by members of the Weighing Sector in 2018 failed to identify any technical reason for the exemption criteria not being added to the AWS Code. It is believed its omission from the AWS Code was a simple oversight.

Based on its discussion about this item, the Weighing Sector recommended the exemptions appearing in paragraph S.5.4. of the Scales Code be added to paragraph *S.3.2. Load Cell Verification Interval Value* of the AWS Code.

During the January 2019 NCWM Interim Meeting, Mr. Russ Vires (Mettler Toledo LLC) speaking on behalf of the SMA, expressed that group's support for the proposal. In written comments and recommendations provided to the Committee in advance of the Interim Meeting, NIST OWM provided the following with respect to this item:

> OWM concurs with the rationale provided by the NTEP Weighing Sector for the recommended changes in this proposal and agrees that those changes are reasonable. OWM believes the changes proposed will align the NIST Handbook 44 Automatic Weighing Systems Code with the Scales Code and that the omission of criteria providing an exception to the requirement regarding the relationship of minimum load cell verification interval value to the scale division was likely an oversight in the initial drafting of the AWS Code.

At the 2019 NCWM Interim Meeting, the S&T Committee, after hearing comments offered during open hearings session and after deliberation during its work session, decided this item has merit and should be assigned a Voting status.

During the 2019 NCWM Annual Meeting, the Committee noted that the proposed language is intended to be nonretroactive; however, the language appearing in the proposal is not formatted in italicized font. The Committee agreed to present the item for vote after first amending the language to italic font as shown in the Item Under Consideration.

Regional Association Comments:
At the WWMA 2018 fall Annual Meeting, the WWMA heard comments from Mrs. Tina Butcher (NIST OWM) who noted this item was developed and submitted by the NTEP Weighing Sector, and she believes the item is ready for a vote. WWMA heard no comments in opposition to the item and recommended the item be designated as a Voting item on the NCWM S&T Committee's agenda.

This publication is available free of charge from: https://doi.org/10.6028/NIST.SP.1253

At the NEWMA 2018 fall Interim Meeting during the Committee's open hearings, no comments were heard. Hearing no opposition or discussion on this item, NEWMA believes this item is fully developed and recommended this as a Voting item.

At the NEWMA 2019 spring Annual Meeting, Mr. Vires commented that the SMA supports this item. NEWMA recommended this as a Voting item on the NCWM S&T Committee agenda.

At the SWMA 2018 fall Annual Meeting, no comments were heard on this item. SWMA recognizes the work of the NTEP Weighing Sector and recognizes their expertise. SWMA recommends moving this forward as a Voting item.

At the CWMA 2018 fall Interim Meeting, during the Committee's open hearings, no comments were heard. CWMA agrees this is a necessary addition to harmonize the AWS Code with other Codes and recommended this as a Voting item.

At the CWMA's 2019 spring Annual Meeting, Mr. Vires (Mettler Toledo LLC) speaking on behalf of the SMA, voiced support for this item.

Additional letters, presentations, and data may have been part of the Committee's consideration and were posted on the NCWM website during the time this item was on the Committee's agenda. To the extent possible, comments and positions from such documents have been summarized in the Committee's report along with comments heard during the Committee's hearings.

WIM – WEIGH-IN-MOTION SYSTEMS USED FOR VEHICLE ENFORCEMENT SCREENING TENTATIVE CODE

WIM-1 D Title of Tentative Code, S.1.7.1. Values to be Recorded., S.4.1. Designation of Accuracy., N.1. Test Procedures, T.2. Tolerance Values for Accuracy ~~Class A~~ Classes., UR.1.1. General, Table 1. Typical Class or Type of Device for Weighing Applications.

Source:
Intercomp Company (2019)

Purpose:
Provide for certification of non-legal for trade weigh-in-motion scales for vehicles.

Item Under Consideration:
Amend NIST Handbook 44 Weigh-in-Motion Systems used for Vehicle Enforcement Screening Code as follows:

Section 2.25. Weigh-In-Motion Systems

Used for Vehicle ~~Enforcement~~ Weight Screening – Tentative Code

...

S.1.7.1. Values to be Recorded. – At a minimum, the following values shall be printed and/or stored electronically for each vehicle weighment:

...

(j) violations **if applicable,** as identified in paragraph S.2.1. Violation Parameters, which occurred during the weighing of the vehicle; and

This publication is available free of charge from: https://doi.org/10.6028/NIST.SP.1253

...

S.2.1. Violation Parameters (if applicable,). – The instrument shall be capable of accepting user-entered violation parameters

...

S.4.1. Designation of Accuracy. – Weigh-in-motion systems meeting the requirements **in Table T.2.2. Tolerances for Accuracy Classes** of this code shall be designated **with appropriate accuracy class.** ~~**as accuracy Class A.**~~

...

N.1. Test Procedures

...

N.1.4. Test Speeds. – All dynamic tests shall be conducted **up to the intended speed limit of the WIM system or** within 20 % below or at the posted speed limit**, whichever is lower.**

N.1.5. Test Procedures.

N.1.5.1. Dynamic Load Test. – The dynamic test shall be conducted using the test vehicles defined in N.1.1. Selection of Test Vehicles. The test shall consist of a minimum of 20 runs for each test vehicle at the speed as stated in N.1.4. Test Speeds.

At the conclusion of the dynamic test there will be a minimum of 20 weight readings for each single axle, axle group, and gross vehicle weight of the test vehicle. The tolerance for each weight reading shall be based on the percentage values specified in Table T.2.2. ~~**Tolerances for Accuracy Class A.**~~

...

T.2. Tolerance Values for Accuracy Classes ~~**Class A.**~~

T.2.2. Tolerance Values for Dynamic Load Test. – The tolerance values applicable during dynamic load testing are as specified in Table T.2.2.

~~**Table T.2.2. Tolerances for Accuracy Class A**~~	
~~**Load Description***~~	~~**Tolerance as a Percentage of Applied Test Load**~~
~~**Axle Load**~~	~~**± 20 %**~~
~~**Axle Group Load**~~	~~**± 15 %**~~
~~**Gross Vehicle Weight**~~	~~**± 10 %**~~
~~*** No more than 5 % of the weighments in each of the load description subgroups shown in this table shall exceed the applicable tolerance.**~~	

This publication is available free of charge from: https://doi.org/10.6028/NIST.SP.1253

Table T.2.2. Tolerances for Accuracy Classes				
	Tolerance as a Percentage of Applied Test Load			
Load Description*	**D**	**C**	**B**	**A**
Axle Load	**± 5 %**	**± 10 %**	**± 15 %**	**± 20 %**
Axle Group Load	**± 3 %**	**± 7 %**	**± 10 %**	**± 15 %**
Gross Vehicle Weight	**± 1 %**	**± 2 %**	**± 5 %**	**± 10 %**
***No more than 5 % of the weighments in each of the load description subgroups shown in this table shall exceed the applicable tolerance**				

...

UR.1.1. General. – The typical class or type of device for particular weighing applications is shown in Table 1. Typical Class or Type of Device for Weighing Applications.

Table 1. Typical Class or Type of Device for Weighing Applications	
Class	**Weighing Application**
A	Screening and sorting of vehicles based on axle, axle group, and gross vehicle weight.
B	**Industrial Screening, GVW axle, and axle group checkweighing**
C	**TBD**
D	**TBD**
Note: A WIM system with a higher accuracy class than that specified as "typical" may be used.	

Background/Discussion:
Vehicle and axle weight screening has both safety and enforcement ramifications. Certified WIM systems for vehicle enforcement screening decreases the amount of vehicles in line and subsequent back-ups at static weigh stations with cost and efficiency benefits. Certified WIM systems provide reason for ensuing static weighing of potential overweight commercial vehicles. Further, OSHA requires certified systems for establishing weights (vehicle and cargo) prior to lifting cargo from vehicles, and WIM systems are capable of providing weights at non-legal for trade tolerances, but currently are not capable of being certified. The application of the NIST HB 44 Weigh-In-Motion Systems Used for Vehicle Enforcement Screening (Tentative) Code is for screening and sorting vehicles to determine if a static weighment is necessary.

The proposed changes widens the scope of use and suggests additional accuracy classes as was originally planned. Modifying Section 2.25 is more efficient than suggesting adding an entirely new Section (2.26) having significant overlap with Section 2.25.

During the 2019 Interim Meeting open hearings, the Committee heard comments from Mr. Russ Vires (Mettler Toledo LLC) speaking on behalf of the SMA. Mr. Vires stated that the SMA has no position on this item but looks forward to analysis. The submitter of the item, Mr. John Arnold (Intercomp) stated that the item should be developing. Intercomp plans on adding more data. During the Committee work session, the members agreed that this item should be assigned a Developing status.

This publication is available free of charge from: https://doi.org/10.6028/NIST.SP.1253

NIST OWM staff were unable to attend the 2019 NCWM Interim Meeting because the Department of Commerce was part of the Federal Government closed as part of the partial government shutdown in early 2019 due to a lack of appropriations. In written analysis shared with the Committee in advance of the Interim Meeting, OWM provided the following with respect to this item:

- OWM points out that the changes being recommended in this proposal, if adopted, would set a precedent where the scope of NIST Handbook 44 (as described in the Introduction – sections A. and F. and in the General Code, paragraph G-A.1.) would expand to also apply to many devices that are used in non-commercial applications. If it is the intent of the submitter to create a means by which NIST Handbook 44 could be applied to a specific category of devices or specific application of a device, OWM encourages the submitter to identify that objective in detail as part of this proposal.

- OWM recognizes that many industry officials (and others) wanting to establish a quality assurance program for weighing or measuring devices used for inventory or production control, collection of operational data, or other non-commercial purposes will often use the requirements and procedures outlined in NIST HB 44 to establish guidelines; however, the intended application is for those devices used in commercial transactions, law enforcement, or collection of statistical information by government agencies.

- OWM believes that to expand the application of NIST HB 44 to devices used in applications other than those listed above will lead to confusion and place an even greater burden on weights and measures officials, many of which are severely challenged to fulfill their current obligations for the regulation of commercially-used devices. OWM believes that the principal reason for regulation of commercial devices is to ensure correct and fair measurement/weighment and thereby protect buyers and sellers of commodities.

OWM believes this item should be returned to the submitter for additional development and clarification.

During the 2019 NCWM Annual Meeting, the Committee did not take comments during open hearings on Developing items and agreed to allow only the submitter of a Developing item (or block of Developing items) to provide an update on the progress made to further develop the item(s). There was no update provided by the submitter of this item. During their work session, the Committee agreed to carry over this item on its 2020 agenda, providing the submitter additional time to develop the item.

Regional Association Comments:
At the WWMA 2018 fall Annual Meeting, during open hearings, WWMA S&T Committee heard comments from Mrs. Tina Butcher (NIST OWM) who pointed out that the scope of NIST HB 44 as specified in the General Code does not include "not-legal-for-trade" devices. NIST HB 44 addresses commercial weighing and measuring equipment, statistical data collection, and law enforcement purposes. NIST HB 44 is commonly used by companies and individuals for not-legal-for-trade applications as a source of guidelines for their weighing or measuring applications. Those companies and individuals are free to use those portions of the Handbook that are appropriate for their specific application. It isn't necessary to modify NIST HB 44 in order to use the Handbook criteria for this purpose. If the submitter is looking for standardized guidelines to apply to a given category of not-legal-for-trade applications, perhaps they might collaborate with an industry association or other organization who might have an interest in such a document.

Mr. Eric Golden (Cardinal Scale) had questioned the inclusion of different accuracy classes, particularly those designated as "TBD". Mrs. Butcher noted OWM had recommended the tolerance table be structured with accuracy classes during the development of the original WIM code to allow for future expansion of the code to include different tolerances for different WIM applications, however, had not intended a "not-legal-for-trade" category to be included in this table.

In its work session, the Committee found no merit in the proposal and noted that not forwarding the proposal does not preclude the use of the code in not legal-for-trade applications. Consequently, the WWMA recommended this item not be forwarded to the NCWM S&T Committee and that the item be withdrawn from the WWMA S&T Committee Agenda.

This publication is available free of charge from: https://doi.org/10.6028/NIST.SP.1253

At the NEWMA 2018 fall Interim Meeting, Mr. Golden reported during the Committee's open hearings that there are many questions concerning this item, and he recommended getting more information in regard to the source of their tolerance numbers.

NEWMA believes this item requires further development by the submitter and recommended this as a Developing item.

At the NEWMA 2019 spring Annual Meeting, Mr. Vires, (Mettler Toledo LLC) speaking on behalf of the SMA, reported during the Committee's open hearings that the SMA has taken no position on this item and looks forward to additional analysis. NEWMA recommended this as a Developing item.

At the SWMA 2018 fall Annual Meeting, the SWMA heard from NIST OWM that the changes in this proposal to the Tentative Code would make this the only code in NIST HB 44 that would expressly be applied to non-commercial devices and would set a precedent that will drastically change the scope of NIST HB 44. The SWMA agreed with the comments and recommended the item be Withdrawn.

At the CWMA 2018 fall Interim Meeting, Mr. Arnold of Intercomp Company (submitter) provided a presentation during the CWMA meeting. Based on a comment referencing G-A.1. (c), this proposal may have a place in NIST Handbook 44. The CWMA recommended this as a Developing item to allow for additional stakeholder input.

At the CWMA 2019 spring Annual Meeting, Mr. Vires, speaking on behalf of the SMA, reported that the SMA takes no position. Ms. Diane Lee, NIST OWM, pointed out that the changes being recommended in this proposal, if adopted, would set a precedent where the scope of NIST HB 44 (as described in the Introduction - Sections A. and F. and in the General Code, paragraph G-A.1.) would expand to also apply to many devices that are used in non-commercial applications. The CWMA recommended this item be withdrawn because it is not clear why OSHA needs NIST HB 44 to certify these devices.

Additional letters, presentations, and data may have been part of the Committee's consideration and were posted on the NCWM website during the time this item was on the Committee's agenda. To the extent possible, comments and positions from such documents have been summarized in the Committee's report along with comments heard during the Committee's hearings.

BLOCK 1 ITEMS (B1) NEW A TERMINOLOGY FOR TESTING STANDARDS (VERIFICATION STANDARDS, FIELD STANDARDS, TRANSFER STANDARDS, FIELD REFERENCE STANDARDS, ETC.,) TOLERANCES ON TESTS WHEN TRANSFER STANDARDS ARE USED, MINIMUM QUANTITY FOR FIELD REFERENCE STANDARD METER TESTS

Background/Discussion:
At the 2019 NCWM Interim Meeting, the S&T Committee decided to combine items on its agenda relating to the issue of transfer standards (including items already in blocks) into one block. (NEW) Block 1 of the 2019 Interim Meeting report (NCWM Publication 16) now includes the following items from the Committee's 2019 Interim Meeting Agenda: Gen-3, Block 1; Block 2; LPG-3; and MFM-5. These items are still listed as individual listings in this report providing the Item Under Consideration, Source, Purpose, and Background. There is also a note added to each individual item referring the reader to the New Block 1 items. All individual items under this New B1 have retained the same numbering for ease in referring to the discussion on each item.

Mr. Brett Gurney, NCWM Chair, assigned a field standards TG to work on the New Block 1 items. The TG includes the original submitters of the items, representatives from each region, and a NIST representative. The TG members are:

- Chairman & SWMA representative – Mr. Jason Glass Kentucky
- NEWMA representative – Mr. Brad Bachelder – Maine
- WWMA representative -Mr. Josh Nelson – Oregon
- CWMA representative – Mr. Greg Vanderplatts – Minnesota
- Seraphin – Mr. Bob Murnane
- Endress + Hauser Flowtec AG USA – Mr. Michael Keilty
- NIST representative – Mr. Val Miller

At the 2019 NCWM Annual Meeting, Mr. Brett Gurney (NCWM Chair) informed the Committee there has been a TG formed to address all items now included under (New) Block 1. Mr. Gurney also stated that the efforts of the TG should focus on providing a definition for different types of testing standards (transfer, field, reference, etc.) and identifying criteria for those standards. The TG is charged with completion of these efforts by July 2021. During the work session, the Committee concurred with the formation of the TG and to also maintain an Assigned status for this block of items.

Following the NCWM's 2019 Annual Meeting, there was discussion of adding one representative from the Grain Moisture and Measuring Sectors to the Field Standards TG. Mr. Randy Burns (Grain Moisture Meter Sector) agreed to participate, and an additional person may be added from the Measuring Sector.

See additional comments to New Block 1 items that are addressed in each item included in New Block 1 (Gen-3, B1, B2, LPG-3, and MFM-5)

The following is a listing of all items now considered under Block 1.

B1N: GEN-3 A G-T.5. Tolerances on Tests When Transfer Standards are Used., Appendix D – Definitions: <u>standards, field.</u>, ~~transfer standard.~~ and <u>standard, transfer.</u>

Source:
Seraphin Test Measure Company (2019)

Purpose:

(a) Add a definition for field standard that identifies the critical characteristics for field standards to comply with the Fundamental Considerations of NIST Handbook 44 (specifically, a standard that has long-term stability and meets the one-third requirement for accuracy and uncertainty over the range of environmental and operational variables in which commercial measuring devices are used); and

(b) To add a generalized definition for transfer standards in NIST Handbook 44 to clearly include the transfer standards already referenced in various codes; and

(c) To specify that when a transfer standard is used, the basic tolerances specified in NIST Handbook 44 be increased the amount of the estimated uncertainty associated with the transfer standard.

Item Under Consideration:
Amend NIST Handbook 44 General Code as follows**:**

<u>G-T.5. Tolerances on Tests When Transfer Standards Are Used. – To the basic tolerance values that would otherwise be applied, there shall be added an amount equal to two times the standard deviation of the applicable transfer standard when compared to a basic reference standard.</u>

<u>The codes 5.56.(a) Grain Moisture Meters, 5.56.(b) Grain Moisture Meters, and 5.57. Near-Infrared Grain Analyzers are exempt from this requirement, because NIST Handbook 159 has requirements for monitoring and retesting grain samples to ensure adequate stability and the tolerances for the devices under test already incorporate the uncertainty associated with the use of grain samples as transfer standards. The code 2.21.</u>

This publication is available free of charge from: https://doi.org/10.6028/NIST.SP.1253

This publication is available free of charge from: https://doi.org/10.6028/NIST.SP.1253

Belt-Conveyor Scale Systems is also exempt, because relative and absolute tolerances are included in the code.

And amend NIST Handbook 44 Appendix D – Definitions as follows:

Standard, Field. – A physical standard that (a) is stable (accurate and repeatable) over an extended period of time (typically one year) and (b) meets the specifications and tolerances in NIST Handbook 105- series standards (or other suitable and designated standards) over the range of environmental and operational parameters in which the commercial measuring devices are used and is traceable to the reference or working standards through comparisons, using acceptable laboratory procedures, and used in conjunction with commercial weighing and measuring equipment. "Other suitable and designated standards" must show that the field standards have been tested over the range of environmental and operational parameters in which the commercial measuring devices under test are used and prove that the performance of the field standard meets the requirements of the fundamental considerations.

~~**transfer standard. – A measurement system designed for use in proving and testing cryogenic liquid measuring devices. [3.38]**~~

Standard, Transfer. – A physical artifact, static or dynamic measurement device or a reference material that is stable (accurate and repeatable) for a short time period under the limited environmental and operational conditions during which the transfer standard is used. A transfer standard may be used as a temporary measurement reference to check the accuracy of a commercial measuring instrument, but the transfer standard does not satisfy the NIST Handbook 44 Fundamental Consideration that its correction and uncertainty are less than one-third of the smallest tolerance applied to the commercial measuring instrument under test, either over a long time period or a wide range of environmental or operating parameters. Transfer standards are called by different terms in different Handbook 44 codes and include terms such as master meter, fifth wheel, material, reference weight [railroad] cars, test vehicles and reference vehicle.

Background/Discussion:
This new item was submitted for the 2019 NCWM S&T Interim agenda. The proposal is a recommendation to add a definition for "field standard" and "transfer standard" and add a paragraph to the general code that there be an increase in tolerance when "transfer standards" are used. This proposal along with other proposals in agenda items Block 1 and Block 2 that are also recommended definitions for standards will have an impact on terms used in agenda items that are also included in Block 1, LPG-3 and MFM-5.

Over the last several years, there have been, and still are, proposals to recognize some types of meters as either transfer standards or as field standards. NIST Handbook 44 already recognizes the use of many different types of master meters, other reference materials, or devices as transfer standards. This proposal is based upon the existing recognition and permitted use of transfer standards that are already in NIST Handbook 44.

However, there is no common understanding among industry and weights and measures officials as to what distinguishes a field standard from a transfer standard. Consequently, definitions are proposed for field standards and transfer standards to highlight the critical differences between these two types of standards. Any artifact, reference material, or measuring device that meets the requirements of accuracy and repeatability as specified in Section 3.2. of the NIST Handbook 44 Fundamental Considerations qualifies as a field standard. However, what has not been clearly understood is that **the field standard must meet Section 3.2. over the environmental and operational parameters in which the commercial measuring devices under test are used.** The ranges for these environmental and operational parameters may be very large. These parameters may include flow rates for meters under test, ambient and product temperatures, system operating pressures, and different products being measured.

A range of environmental and operational parameters over which a transfer standard must meet the accuracy and repeatability requirements are more limited; that is, a transfer standard need only be accurate and repeatable over the conditions that exist for the "short" time that the transfer standard is used. Transfer standards may be tested before and after use to verify a commercial measuring device, so the range of conditions in which accuracy and repeatability

This publication is available free of charge from: https://doi.org/10.6028/NIST.SP.1253

may be relatively small. The transfer standard is only required to be accurate and repeatable during the time it is in use, which might be to test only one commercial device.

A critical issue that has not been adequately addressed and defined is, "How long must a field standard remain valid (i.e., accurate and repeatable)?" Common sense dictates that the field standard must remain valid over an extended period of time. It isn't clear that a common minimum time period for field standards or for transfer standards can be established. In any situation, field standards must be valid and stable over long time periods and wide ranges of environmental and operational parameters as compared to transfer standards.

Additionally, transfer standards do not have to meet the one-third requirement for the uncertainty associated with its performance. Consequently, NIST Handbook 44 typically specifies that the basic tolerances to be applied to the device under test be increased by two times the standard deviation of the transfer standard. This presumes that the transfer standard has been adjusted to have "zero error" or corrections are used to address any significant systematic errors in the transfer standard. This also applies when field standards are used. "The reason for this requirement is to give the device being tested as nearly as practicable the full benefit of its own tolerance."[1]

There are some Codes in NIST HB 44 that specify, when transfer standards are used, the basic tolerances to be applied to the devices under test are to be increased by the uncertainty of the transfer standard (i.e., two times the standard deviation of the transfer standard). Consequently, a General Code paragraph under tolerances is proposed to be added to address those codes where these increases in the basic tolerances have not been included.

During the 2019 NCWM Interim Meeting, the Committee heard comments voicing opposition to this item from individuals and organizations, including the SMA and MMA. NIST OWM provided written comments to the Committee prior to the Interim Meeting that included a recommendation to include GEN-3 with Block 1, Block 2, LPG-3, and MFM-5 in a single block noting the relationship of these different items.

During the NCWM Annual Meeting, the S&T Committee considered the comments during the opening hearing and recommended that GEN-3 be combined with B1, B2, LPG-3 and MFM-5 agenda items and gave these items an Assigned status.

At the NCWM 2019 Annual Meeting, GEN-3 was combined with Block 1, Block 2, LPG-3, and MFM-5 to be considered together as a single item. See (NEW) Block 1 for status and additional details on these (B1) combined items.

NIST OWM provides the following comments:

> **Agenda Items LPG-3 N.3. Test Drafts and MFM-5 N.3. Test Drafts** were originally submitted in 2015 and were at that time identified as items 332-2 and 337-3. The purpose for these agenda items are to allow the use of what is termed "transfer standards" in the original proposal and that are also referred to as "master meters." These agenda items were then revised to change the term "Transfer Standard" to "Field Reference Standard." There are key issues to consider before using standards to test legal for trade devices:
>
> - Evaluations of any proposed standards are needed to include; collecting data over a wide range of environmental conditions; demonstration of its reliability and repeatability; and determination that its design is suitable.
>
> - Components should be in place at multiple levels of the weights and measures infrastructure to ensure adequate laboratory testing of the standard prior to use and periodically throughout the use of the standard and appropriate training for field staff.

[1] NIST Handbook 44, Fundamental Considerations, Section 3.2.

This publication is available free of charge from: https://doi.org/10.6028/NIST.SP.1253

- NIST OWM recognizes the need to assess the appropriateness of the use of master meters as field standards. As such, NIST purchased six Coriolis meters to test refined fuels and LPG and plans to purchase one ½-inch meter to test CNG dispensers and these are listed below:

    1. Two ½-inch Coriolis meters (one to be used to test LPG, the other for refined fuels)

    2. One 1-inch Coriolis meter (for refined fuels)

    3. Two 1½-inch Coriolis meters (one to be used to test LPG, the other for refined fuels)

    4. One 3-inch Coriolis meter (for refined fuels), and

    5. One ½-inch meter specifically designed as a master meter to test CNG

NIST OWM's next steps in the process are to:

    6. Verify functionality of the meters

    7. Return the meters to venders for additional environmental testing

    8. Identify and procure adapters needed for testing field meters and configure cases and carts needed for transport and use. (We are currently looking to equip the meters with inlet and outlet valves and connections, and then mounting them on supporting structures for ease in moving the meters.)

    9. Identify locations for data collection and partners to collect data.

- Four States have volunteered to work with NIST to collect data for CNG testing.

- These efforts are seen as necessary since data is needed to ensure that the one minute of flow specified for the test draft size for a minimum test is appropriate since refueling (especially the topping off) of the tank on a consumer's vehicle is completed in far less time than a minute.

- Appropriate terms and definitions for transfer standards, field reference standards are needed for the language in LPG-3 and MFM-5, and these are being considered in Block 1, Block 2 and Gen-3.

Agenda Items Block 1, Block 2 and Gen-3 Block 1 and Block 2 items were originally submitted in 2017 and were previously Block 4 and 5. Gen-3 is a new item submitted for the 2019 S&T agenda.

- Block 1 is a recommendation to remove the term "Transfer Standard" and other terms used in NIST HB 44 to describe a standard used to test legal for trade devices and replace it with the term "Field Standard".

- Block 2 is a recommendation to add a definition for "Field Reference Standard" to some sections in NIST HB 44 and delete references to "Transfer Standard."

- Gen-3 is a recommendation to add a definition for "field standard" and "transfer standard" and add a paragraph to the general code that there be an increase in tolerance when "transfer standards" are used.

All three items are proposals for terminology that will affect the proposal in LPG-3 and MFM-5. NIST OWM continues to review these items and believes that additional consideration of the new proposal, Gen-3, along with Block 1 and Block 2 items is needed to finalize the terms and definitions for standards use to test legal-for-trade device.

NIST OWM recognizes that one of the issues concerning the use of the term "field standard" and having the term apply to all standards is that all standards may not be able to meet the requirements for field standards addressed

This publication is available free of charge from: https://doi.org/10.6028/NIST.SP.1253

in Section 3.2 of the Fundamental Considerations in NIST HB 44. There is also an issue of who has the authority to accept a standard for use. To address these and other concerns, NIST OWM believes a possible approach would be as follows:

1. Add a statement to Section 3.2 in NIST HB 44 Fundamental Considerations to address another option for standard accuracy during testing, elaborate on traceability and how it is achieved, and language concerning regulatory responsibility similar to what is included in NIST HB 130.

2. Find and examine different terminology used in NIST HB 44 for standards used in testing commercial devices and select an appropriate term for these standards.

3. Make appropriate changes in NIST HB 44, NIST HB 130 and other documents as appropriate.

4. Collect data using NIST-purchased Coriolis meters to demonstrate that master meters are a viable option for use in testing devices.

5. Develop a guidance document with clear processes to describe how standards are validated and values are assigned.

Over the past several years, NIST OWM has provided comments regarding the necessary items needed for verification of a standard used to test legal for trade devices and has shared some steps that NIST OWM is taking to collect some of this verification data. Additional comments are included in Appendix A.

In addition, information was provided that a single point test of the meter may be used to prove whether or not current meter calibration data is valid. This will likely minimize calibration cost for these meters.

Regional Association Comments:
At the WWMA 2018 fall Annual Meeting they recommended this item be addressed together with the items in Block 1 and 2; LPG-3; and MFM-5 and designate the status as Developing.

At the NEWMA 2018 fall Interim Meeting they recommended this as a Developing Item and part of a group (with Block 1, Block 2, LPG-3, and MFM-5).

At the NEWMA 2019 spring Annual Meeting, Mr. Russ Vires (Mettler Toledo LLC) speaking on behalf of the SMA, reported during the Committee's open hearings, the SMA opposes GEN 3 as written. Mr. Vires stated the SMA does not believe that the item has been fully developed and that a proposal is put forth for the definition of a field standard that applies to measuring devices but omits other devices such as weighing equipment. Mr. Vires also commented that the SMA does support proposed changes for these items also found in the new Block 1: SCL 4; ABW 1: and AWS 1 and looks forward to further development. Mr. Mike Sikula (New York) commented that it is important to consider that requirements found in NIST HB 44 Appendix A, Section 3.2. "Tolerances for Standards" (less than one-third the value of the minimum tolerance applied) cannot always be met but the use of alternative standards may be the only way to get the job done or the only way to do a job safely. Mr. Bob Murnane (Seraphin) commented that he would like to have clear, simple definitions for "transfer standard" and "field standard.". He also thinks it may be best to start fresh and focus on the intent of the item. NEWMA recommended that the development of this item continue as an Assigned item.

At the SWMA 2018 Fall Annual Meeting during open hearings, SWMA heard from NIST OWM that these items are similar and related to the items in Block 1, Block 2, LPG-3, MFM-5 and that OWM recommends the proposals be combined into one block so that items may be developed as a single item. SWMA received written comments from Seraphin that the items mentioned above were similar to other items on the agenda (Blocks 1 and 2, LPG-3, and MFM-5) but that the terminology was different. The SWMA heard from the Scale Manufacturers Association (SMA) that they look forward to the further development of the item. SWMA received written comment from Seraphin that this item does address the possible need to increase the tolerance when a transfer standard is used, but Seraphin recognizes that tolerances applied to devices when transfer standards are used is already addressed in some NIST Handbook 44 device codes.

This publication is available free of charge from: https://doi.org/10.6028/NIST.SP.1253

SWMA does recognize that GEN-4, LPG-3 and MFM-5 are different in that they add further considerations to their respective items in addition to what is being discussed in Block 1 and Block 2. The SWMA recommends this item to be a Developing status and that the submitters of these items should work on the differences in terminology before moving the items forward.

At the CWMA 2018 fall Interim Meeting, the Committee heard no comments during open hearings. CWMA questions the need for G-T.5. and believes the terms included in the Transfer Standard definition are already defined throughout NIST Handbook 44. CWMA recommended this as a Developing item.

At the CWMA 2019 spring Annual Meeting, Mr. Vires (Mettler Toledo LLC) speaking on behalf of the SMA, reported during the Committee's open hearings, support for Block 1 but also stated that GEN-3 needs development because the definition should include all device types if it is to be added to NIST HB 44. Ms. Diane Lee (NIST OWM) commented they have purchased Coriolis meters to begin data collection. Mr. Richard Suiter wants a balanced work group with old and new ways of testing, to include petroleum marketers, scale manufacturers, large prover manufacturers, and device users. Kansas W&M commented NIST HB 105 will need to be developed and to proceed cautiously with data collection.

Additional letters, presentations, and data may have been part of the Committee's consideration and were posted on the NCWM website during the time this item was on the Committee's agenda. To the extent possible, comments and positions from such documents have been summarized in the Committee's report along with comments heard during the Committee's hearings.

BLOCK 1 ITEMS (B1) A TERMINOLOGY FOR TESTING STANDARDS

(Original items and title for Item Block 1 that were included on the 2019 NCWM S&T Interim Meeting agenda.)

[These items have been combined with GEN-3, B2, LPG-3, and MFM-5 as part of NEW Block 1]

B1: SCL-4	A	N.2. Verification (Testing) Standards
B1: ABW-1	A	N.2. Verification (Testing) Standards
B1: AWS-1	A	N.1.3. Verification (Testing) Standards, N.3.1. Official Tests, UR.4. Testing Standards
B1: CLM-1	A	N.3.2. Transfer Standard Test and T.3. On Tests Using Transfer Standards
B1: CDL-1	A	N.3.2. Transfer Standard Test, T.3. On Tests Using Transfer Standards
B1: HGM-1	A	N.4.1. Master Meter (Transfer) Standard Test, T.4. Tolerance Application on Test Using Transfer Standard Test Method
B1: GMM-1	A	5.56(a): N.1.1. Air Oven Reference Method Transfer Standards, N.1.3. Meter to Like-Type Meter Method Transfer Standards and 5.56(b): N.1.1. Transfer Standards, T. Tolerances1
B1: LVS-1	A	N.2. Testing Standards
B1: OTH-1	A	Appendix A: Fundamental Considerations, 3.2. Tolerances for Standards, 3.3. Accuracy of Standards
B1: OTH-2	A	Appendix D: Definitions: fifth-wheel, official grain samples, transfer standard and Standard, Field

Source:
NIST OWM (2018)

Purpose:
To remove the current limited definition and use of the term "Transfer Standard" and eliminate terms "Testing Standards", "Verification (Testing) Standards", and instead use the term Field Standard, consistent with its reference in NIST Handbook 44, Appendix A, Fundamental Considerations and its use in several sections of NIST Handbook 44. To correct the broad use of the term Transfer Standard and instead replace its use with the term Field Standard. To update all use of the term "standard" to use the term "Field Standard". To remove the current limited definition of Transfer Standard and instead use the term Field Standard.

This publication is available free of charge from: https://doi.org/10.6028/NIST.SP.1253

B1: SCL-4 A N.2. Verification (Testing) Standards

Item Under Consideration:
Amend NIST Handbook 44, Scales Code as follows:

N.2. ~~Verification (Testing)~~ Field Standards. – Field standard weights used in verifying weighing devices shall comply with requirements of NIST Handbook 105-Series standards (or other suitable and designated standards) or the tolerances expressed in Fundamental Considerations, paragraph 3.2. (i.e., one-third of the smallest tolerance applied).
(Amended 1986 **and 20XX**)

B1: ABW-1 A N.2. Verification (Testing) Standards

Item Under Consideration:
Amend NIST Handbook 44, Automatic Bulk Weighing Systems Code as follows:

N.2. ~~Verification (Testing)~~ Field Standards. – **Field ~~S~~s**tandard weights and masses used in verifying weighing devices shall comply with requirements of NIST Handbook 105-1 (Class F) or the tolerances expressed in Appendix A, Fundamental Considerations, paragraph 3.2. (i.e., one-third of the smallest tolerance applied).
(Amended 20XX)

B1: AWS-1 A N.1.3. Verification (Testing) Standards, N.3.1. Official Tests, UR.4. Testing Standards

Item Under Consideration:
Amend NIST Handbook 44, Automatic Weighing Systems Code as follows:

N.1.3. ~~Verification (Testing)~~ Field Standards. – Field standard weights shall comply with requirements of NIST Handbook 105-1, "Specifications and Tolerances for Field Standard Weights (Class F)" or the tolerances expressed in Fundamental Considerations, paragraph 3.2. (i.e., one-third of the smallest tolerance applied).
(Amended 20XX)

N.3.1. Official Tests. – Officials are encouraged to periodically witness the required "in house" verification of accuracy. Officials may also conduct official tests using the on-site **~~testing~~ field** standards or other appropriate standards belonging to the jurisdiction with statutory authority over the device or system.
(Amended 20XX)

UR.4. ~~Testing~~ Field Standards. – The user of a commercial device shall make available to the official with statutory authority over the device **~~testing~~ field** standards that meet the tolerance expressed in Fundamental Considerations, paragraph 3.2. Tolerances for Standards (i.e., one-third of the smallest tolerance applied). The accuracy of the **~~testing~~ field** standards shall be verified annually or on a frequency as required by the official with statutory authority and shall be traceable to the appropriate SI standard.
(Amended 20XX)

B1: CLM-1 A N.3.2. Transfer Standard Test and T.3. On Tests Using Transfer Standards

Item Under Consideration:
Amend NIST Handbook 44, Cryogenic Liquid-Measuring Devices Code as follows:

N.3.2. ~~Transfer~~ Field Standard Test. – When comparing a meter with a calibrated ~~**transfer**~~ **field** standard, the test draft shall be equal to at least the amount delivered by the device in two minutes at its maximum discharge rate and shall in no case be less than 180 L (50 gal) or equivalent thereof. When testing uncompensated volumetric meters in a continuous recycle mode, appropriate corrections shall be applied if product conditions are abnormally affected by this test mode.

(Amended 1976 **and 20XX**)

~~**T.3. On Tests Using Transfer Standards. – To the basic tolerance values that would otherwise be applied, there shall be added an amount equal to two times the standard deviation of the applicable transfer standard when compared to a basic reference standard. (Added 1976)**~~

B1: CDL-1 A N.3.2. Transfer Standard Test, T.3. On Tests Using Transfer Standards

Item Under Consideration:

Amend NIST Handbook 44, Carbon Dioxide Liquid-Measuring Devices Code as follows:

N.3.2. ~~Transfer~~ Field Standard Test. – When comparing a meter with a calibrated ~~**transfer**~~ **field** standard, the test draft shall be equal to at least the amount delivered by the device in two minutes at its maximum discharge rate.

(Amended 20XX)

~~**T.3. On Tests Using Transfer Standards. – To the basic tolerance values that would otherwise be applied, there shall be added an amount equal to two times the standard deviation of the applicable transfer standard when compared to a basic reference standard.**~~

B1: HGM-1 A N.4.1. Master Meter (Transfer) Standard Test, T.4. Tolerance Application on Test Using Transfer Standard Test Method

Item Under Consideration:

Amend NIST Handbook 44, Hydrogen Gas-Measuring Devices Tentative Code as follows:

N.4.1. Master Meter ~~(Transfer)~~ Field Standard Test. – When comparing a measuring system with a calibrated ~~**transfer**~~ **field** standard, the minimum test shall be one test draft at the declared minimum measured quantity and one test draft at approximately ten times the minimum measured quantity or 1 kg, whichever is greater. More tests may be performed over the range of normal quantities dispensed.

(Amended 20XX)

~~**T.4. Tolerance Application on Test Using Transfer Standard Test Method. – To the basic tolerance values that would otherwise be applied, there shall be added an amount equal to two times the standard deviation of the applicable transfer standard when compared to a basic reference standard.**~~

B1: GMM-1 A 5.56(a): N.1.1. Air Oven Reference Method Transfer Standards, N.1.3. Meter to Like-Type Meter Method Transfer Standards and 5.56(b): N.1.1. Transfer Standards, T. Tolerances[1]

Item Under Consideration:

Amend NIST Handbook 44, Grain Moisture Meters Code as follows:

This publication is available free of charge from: https://doi.org/10.6028/NIST.SP.1253

This publication is available free of charge from: https://doi.org/10.6028/NIST.SP.1253

5.56.(a) Grain Moisture Meters

N.1.1. Air Oven Reference Method ~~Transfer~~ Field Standards. – Official grain samples shall be used as the official ~~transfer~~ **field** standards with moisture content and test weight per bushel values assigned by the reference methods. The reference methods for moisture shall be the oven drying methods as specified by the USDA GIPSA. The test weight per bushel value assigned to a test weight transfer standard shall be the average of 10 test weight per bushel determinations using the quart kettle test weight per bushel apparatus as specified by the USDA GIPSA. Tolerances shall be applied to the average of at least three measurements on each official grain sample. Official grain samples shall be clean and naturally moist, but not tempered (i.e., water not added).

(Amended 1992, 2001, ~~and~~ 2003**, and 20XX**)

N.1.3. Meter to Like-Type Meter Method Transfer Standards. – Properly standardized reference meters using National Type Evaluation Program approved calibrations shall be used as ~~transfer~~ **field** standards. A reference meter shall be of the same type as the meter under test. Tests shall be conducted side-by-side using, as a comparison medium, grain samples that are clean and naturally moist, but not tempered (i.e., water not added).

(Added 2001) **(Amended 20XX)**

5.56.(b) Grain Moisture Meters

N.1.1. ~~Transfer~~ Field Standards. – Official grain samples shall be used as the official ~~transfer~~ **field** standards with moisture content values assigned by the reference methods. The reference methods shall be the oven drying methods as specified by the USDA GIPSA. Tolerances shall be applied to the average of at least three measurements on each official grain sample. Official grain samples shall be clean and naturally moist, but not tempered (i.e., water not added).

(Amended 1992 **and 20XX**)

T. Tolerances[1]

[1]These tolerances do not apply to tests in which grain moisture meters are the ~~transfer~~ **field** standards.

(Amended 20XX)

B1: LVS-1 A N.2. Testing Standards

Item Under Consideration:

Amend NIST Handbook 44, Electronic Livestock, Meat and Poultry Evaluation Systems and/or Devices Code as follows:

N.2. ~~Testing~~ Field Standards. – ASTM Standard F2343 requires device or system users to maintain accurate ~~reference~~ **field** standards that meet the tolerance expressed in NIST Handbook 44 Fundamental Considerations, paragraph 3.2. Tolerances for Standards (i.e., one-third of the smallest tolerance applied).

(Amended 20XX)

B1: OTH-1 A Appendix A: Fundamental Considerations, 3.2. Tolerances for Standards, 3.3. Accuracy of Standards

Item Under Consideration:

Amend NIST Handbook 44, Appendix A: Fundamental Considerations as follows:

This publication is available free of charge from: https://doi.org/10.6028/NIST.SP.1253

3.2. Tolerances for Field Standards. – Except for work of relatively high precision, it is recommended that the accuracy of standards used in testing commercial weighing and measuring equipment be established and maintained so that the use of corrections is not necessary. When the standard is used without correction, its combined error and uncertainty must be less than one-third of the applicable device tolerance.

Device testing is complicated to some degree when corrections to standards are applied. When using a correction for a standard, the uncertainty associated with the corrected value must be less than one-third of the applicable device tolerance. The reason for this requirement is to give the device being tested as nearly as practicable the full benefit of its own tolerance.

(Amended 20XX)

3.3. Accuracy of Field Standards. – Prior to the official use of testing apparatus, its accuracy should invariably be verified. Field standards should be calibrated as often as circumstances require. By their nature, metal volumetric field standards are more susceptible to damage in handling than are standards of some other types. A field standard should be calibrated whenever damage is known or suspected to have occurred or significant repairs have been made. In addition, field standards, particularly volumetric standards, should be calibrated with sufficient frequency to affirm their continued accuracy, so that the official may always be in an unassailable position with respect to the accuracy of his testing apparatus. Secondary field standards, such as special fabric testing tapes, should be verified much more frequently than such basic standards as steel tapes or volumetric provers to demonstrate their constancy of value or performance.

Accurate and dependable results cannot be obtained with faulty or inadequate field standards. If either the service person or official is poorly equipped, their results cannot be expected to check consistently. Disagreements can be avoided and the servicing of commercial equipment can be expedited and improved if service persons and officials give equal attention to the adequacy and maintenance of their testing apparatus.

(Amended 20XX)

B1: OTH-2 A Appendix D – Definitions: fifth-wheel, official grain samples~~, transfer standard~~ and Standard, Field

Item Under Consideration:
Amend NIST Handbook 44, Appendix A: Fundamental Considerations as follows:

fifth wheel. – A commercially-available distance-measuring device which, after calibration, is recommended for use as a field ~~transfer~~ standard for testing the accuracy of taximeters and odometers on rented vehicles. [5.53, 5.54]

(Amended 20XX)

official grain samples. – Grain or seed used by the official as the official ~~transfer~~ **field** standard from the reference standard method to test the accuracy and precision of grain moisture meters. [5.56(a), 5.56(b)]

(Amended 20XX)

~~**transfer standard. – A measurement system designed for use in proving and testing cryogenic liquid-measuring devices. [3.38]**~~

Standard, Field. – A physical standard that meets specifications and tolerances in NIST Handbook 105-series standards (or other suitable and designated standards) and is traceable to the reference or working standards through comparisons, using acceptable laboratory procedures, and used in conjunction with commercial weighing and measuring equipment.

(Added 20XX)

This publication is available free of charge from: https://doi.org/10.6028/NIST.SP.1253

Background/Discussion:

The term "transfer standard" is currently defined in NIST HB 44 as only being applicable to the Cryogenic Liquid-Measuring Devices Code. This definition should be removed as it is very limited in scope and the terminology a "transfer standard" is, in fact, a robust working measurement standard used in field conditions, better termed and shortened to Field Standard. All instruments/devices used as a field standard in the testing of Weighing and Measuring Devices, regardless of nomenclature, must comply with the requirements of NIST HB 44, Appendix A, Fundamental Considerations, paragraph 3.2 Testing Apparatus, Adequacy.

The recommended changes to NIST HB 44 will align that document with the NIST HB 130, removing ambiguity and adding clarity to the use of field standards for device testing. NIST HB 130 does NOT contain the term transfer standard in any location and already contains the definition and appropriate use of the term field standard.

During the 2018 NCWM Interim Meeting, the Committee received comments from the MMA in support of the proposal. Other comments recommended further development, and some questioned the interpretation and application of the parameters found in NIST HB 44 Appendix A, Fundamental Considerations. During their work session, the Committee agreed to recommend the block of items be given a Developing status.

At the 2018 NCWM Annual Meeting, the Committee received an update from the submitter (NIST OWM). The update included details regarding the discussions taking place at the regional weights and measures associations on this item and that OWM has purchased six Coriolis meters for collecting and analyzing data obtained from field testing "master meters". The Committee agreed to carryover this block of items on its 2019 agenda to allow for further discussion and development of these proposals.

During the 2019 NCWM Interim Meeting, the Committee heard comments on Agenda Items Block 1, Block 2, LPG-3, and MFM-5 together. Mr. Michael Keilty (Endress + Hauser Flowtec AG USA) recommended the adoption of agenda item Block 1 to remove the term "transfer standard" in NIST HB 44 and replace it with the term "field standard". Other comments supported this. Mr. Bob Murnane (Seraphin Test Measure Co.) voiced opposition to the adoption of Item Block 1, stating that transfer standards cannot be eliminated. Other comments were offered stating both opposition and support of the adoption of Block 1.

NIST OWM submitted comments to the Committee prior to the Interim Meeting explaining several points that must be considered prior to using standards to test legal for trade devices. These considerations included:

- the need to demonstrate the standards reliability and repeatability over various environmental conditions;
- ensure that standards are adequately certified in the laboratory; and
- adequate training for users of standards on appropriate use.

OWM is partnering with several states in testing various standards for the purpose of data collection.

The SMA supports the proposal as it applies to the items SCL-4, ABW-1, and AWS-1 items, and looks forward to further development by the TG. It is important to be consistent in our use of terms across multiple sections of NIST Handbook 44.

The Committee considered the comments during the opening hearing and recommended that Block 1, Block 2, LPG-3 and MFM-5 agenda items be combined with GEN-3. The Committee also agreed to give these items an Assigned status.

Additional information can be found in the 2018 NCWM Annual Report and the 2019 NCWM S&T Annual Meeting Report, NCWM Publication 16.

NIST OWM: See comments under the first item (GEN-3) included under the NEW Block 1.

This publication is available free of charge from: https://doi.org/10.6028/NIST.SP.1253

Regional Association Comments:
At the WWMA 2018 fall Annual Meeting, they believe the items in Blocks 1 and 2; Gen-4; LPG-3; and MFM-5 are related and recommends the NCWM S&T Committee combine them into a single block for the purposes of further development rather than present them in a piecemeal fashion as is currently the case with these multiple items. The commonalities in all these items is the need to ensure that terminology for testing equipment and the underlying principles align across all codes and that the criteria in the Fundamental Considerations in Appendix A of NIST Handbook 44 are considered.

Mr. Murnane indicated he would like to see Block 1 items (i.e., the 2018 version of) remain Developing. He noted Seraphin has submitted written comments on these items (and these were made available to the WWMA). Mr. Keilty commented that the LPG-3 and MFM-5 have been on the agenda since 2014, and he believes they need to be made voting items. He doesn't know what more work is needed. He presented the items in Block 2 to attempt to clean up the language.

Mrs. Tina Butcher (NIST OWM) referenced OWM's past analysis, which is available on the NCWM website and shared information about a project to research the use of master meters to assist states and industry and is looking for assistance from the community. Mr. Mahesh Albuquerque (Colorado) and Mr. Brett Gurney (Utah) offered to assist in the gathering of data and noted they really want to see progress on this issue.

The WWMA also recommends the submitters define the function and capabilities of the test equipment that will be used, specify the criteria it will need to meet, and then name the equipment using appropriate terminology. Definitions for any terminology not currently found in NIST HB 44 should be included in the final recommendation (such as is done in Gen-4). The WWMA recommends this block be given Developing status.

At the NEWMA 2018 fall Interim Meeting, the NEWMA recommended this as a Developing Item and part of a group (with Block 1, Block 2, LPG-3, and MFM-5).

At the NEWMA 2019 spring Annual Meeting, Mr. Russ Vires (Mettler Toledo LLC) speaking on behalf of the SMA, reported during the Committee's open hearings, the SMA opposes GEN 3 as written. Mr. Vires stated the SMA does not believe that the item has been fully developed and that a proposal is put forth for the definition of a field standard that applies to measuring devices but omits other devices such as weighing equipment. Mr. Vires also commented that the SMA does support proposed changes for these items also found in the new Block 1: SCL 4; ABW 1: and AWS 1 and looks forward to further development. Mr. Mike Sikula (New York) commented that it is important to consider that requirements found in NIST HB 44 Appendix A, Section 3.2. "Tolerances for Standards" (less than one-third the value of the minimum tolerance applied) cannot always be met but the use of alternative standards may be the only way to get the job done or the only way to do a job safely. Mr. Murnane commented that he would like to have clear, simple definitions for "transfer standard" and "field standard". He also thinks it may be best to start fresh and focus on the intent of the item. NEWMA recommended that the development of this item continue as an Assigned item.

At the SWMA 2018 fall Annual Meeting, NIST noted that these items were similar in purpose to the items in Block 2, Gen-4, LPG-3, MFM-5 and suggested that the proposals be combined in one block so that items may be worked on by the submitters of the items. The SWMA received written comment from Seraphin that the items mentioned above were similar to items but that the terminology was different. The Scale Manufacturers Association looks forward to the further development of the item.

At the CWMA 2018 fall Interim Meeting, the Committee heard no comments during open hearings. CWMA questions the need for G-T.5., and believes the terms included in the Transfer Standard definition are already defined throughout NIST Handbook 44. CWMA recommended this as a Developing item.

At the CWMA 2019 spring Annual Meeting, Mr. Vires speaking on behalf of the SMA, reported during the Committee's open hearings, support for Block 1 but also stated that GEN-3 needs development because the definition should include all device types if it is to be added to NIST HB 44. Ms. Diane Lee (NIST OWM) commented they have purchased Coriolis meters to begin data collection. Mr. Richard Suiter wants a balanced work group with old and new ways of testing, to include petroleum marketers, scale manufacturers, large prover manufacturers, and device

users. Kansas W&M commented NIST HB 105 will need to be developed and to proceed cautiously with data collection.

Additional letters, presentations, and data may have been part of the Committee's consideration and were posted on the NCWM website during the time this item was on the Committee's agenda. To the extent possible, comments and positions from such documents have been summarized in the Committee's report along with comments heard during the Committee's hearings.

This publication is available free of charge from: https://doi.org/10.6028/NIST.SP.1253

BLOCK 2 ITEMS (B2) A DEFINE "FIELD REFERENCE STANDARD"

(Original items and title for block two items that were included on the 2019 NCWM S&T Interim Meeting agenda.)

[These items have been combined with GEN-3, B1, LPG-3, and MFM-5 as part of NEW Block 1]

B2: CLM-2 A N.3.2. Transfer Standard Test and T.3. On Tests Using Transfer Standards
B2: CDL-2 A N.3.2. Transfer Standard Test and T.3. On Tests Using Transfer Standards
B2: HGM-2 A N.4.1. Master Meter (Transfer) Standard Test and T.4. Tolerance Application on Test Using Transfer Standard Test Method
B2: OTH-3 A Appendix D – Definitions: field reference standard meter and transfer standard
B1: LPG-3 A N.3. Test Drafts.
B1: MFM-5 A N.3. Test Drafts.

Source:
Endress + Hauser Flowtec AG USA (2018)

Purpose:
Add definition field reference standard meter to HB 44. Delete transfer standard definition. Change terms in sections 3.34, 3.38 and 3.39.

B2: CLM-2 A N.3.2. Transfer Standard Test and T.3. On Tests Using Transfer Standards

Item Under Consideration:
Amend NIST Handbook 44, Cryogenic Liquid-Measuring Devices Code as follows:

N.3.2. Field Reference~~Transfer~~ Standard Meter Test. – When comparing a meter with a calibrated **field reference~~transfer~~** standard **meter**, the test draft shall be equal to at least the amount delivered by the device in two minutes at its maximum discharge rate, and shall in no case be less than 180 L (50 gal) or equivalent thereof. When testing uncompensated volumetric meters in a continuous recycle mode, appropriate corrections shall be applied if product conditions are abnormally affected by this test mode.
(Amended 1976 **and 20XX**)

T.3. On Tests Using Field Reference~~Transfer~~ Standard~~s~~ Meters. – To the basic tolerance values that would otherwise be applied, there shall be added an amount equal to two times the standard deviation of the applicable **field reference~~transfer~~** standard **meter** when compared to a basic reference standard. (Added 1976)

B2: CDL-2 A N.3.2. Transfer Standard Test and T.3. On Tests Using Transfer Standards

Item Under Consideration:
Amend NIST Handbook 44, Carbon Dioxide Liquid-Measuring Devices Code as follows:

N.3.2. Field Reference~~Transfer~~ Standard Meter Test. – When comparing a meter with a calibrated **field reference~~transfer~~** standard **meter**, the test draft shall be equal to at least the amount delivered by the device in two minutes at its maximum discharge rate.

(Amended 20XX)

T.3. On Tests Using Field Reference~~Transfer~~ Standard~~s~~ Meters. – To the basic tolerance values that would otherwise be applied, there shall be added an amount equal to two times the standard deviation of the applicable **field reference~~transfer~~** standard when compared to a basic **field reference~~reference~~** standard **meter**.

B2: HGM-2 A N.4.1. Master Meter (Transfer) Standard Test and T.4. Tolerance Application on Test Using Transfer Standard Test Method

Item Under Consideration:
Amend NIST Handbook 44, Hydrogen Gas-Measuring Devices Tentative Code as follows:

N.4.1. Field Reference~~Master Meter (Transfer)~~ Standard Meter Test. – When comparing a measuring system with a calibrated **field reference~~transfer~~** standard **meter**, the minimum test shall be one test draft at the declared minimum measured quantity and one test draft at approximately ten times the minimum measured quantity or 1 kg, whichever is greater. More tests may be performed over the range of normal quantities dispensed.

(Amended 20XX)

T.4. Tolerance Application on Test Using Field Reference~~Transfer~~ Standard Meters Test Method. – To the basic tolerance values that would otherwise be applied, there shall be added an amount equal to two times the standard deviation of the applicable **field reference~~transfer~~** standard **meter** when compared to a basic reference standard.

B2: OTH-3 A Appendix D – Definitions: field reference standard meter ~~and transfer standard~~

Item Under Consideration:
Amend NIST Handbook 44, Appendix D as follows:

field reference standard meter – A measurement system designed for use in proving and testing measuring devices and meters.

~~**transfer standard - A measurement system designed for use in proving and testing cryogenic liquid-measuring devices.**~~

Background/Discussion:
During S&T open hearings discussion at the 2017 NCWM Annual Meeting, it was pointed out that the term transfer standard, which is used in the proposal to amend NIST HB 44 3.37 N.3 and 3.32 N.3 Test Drafts is incorrect. The statement made also suggested that the use of transfer standard is incorrectly used in NIST HB 44 code sections 3.34, 3.38 and 3.39. It was suggested that a more appropriate term to use is field reference standard or field reference standard meter.

During the 2018 NCWM Interim Meeting open hearings, the Committee heard comments from Mr. Michael Keilty (Endress + Hauser Flowtec AG USA), submitter of this block of items. Mr. Keilty reported he had developed this proposal with help from Mr. Henry Oppermann (Weights and Measures Consulting, LLC). In written comments to the Committee by Mr. Oppermann on another item, Mr. Oppermann opposed the term "Transfer Standard" in that it is a temporary measurement reference. Mr. Keilty stated that he agrees with this interpretation and states that what he is proposing is for a "field reference standard meter" term and recommends that the items move forward. (He did not specify to what status.)

This publication is available free of charge from: https://doi.org/10.6028/NIST.SP.1253

This publication is available free of charge from: https://doi.org/10.6028/NIST.SP.1253

Mr. Oppermann provided comments for Stand Alone Items LPG-4 and MFM-2. Mr. Oppermann agrees with Mr. Keilty that these are field standards; however, the terminology "field reference standard meter" should just be "field standard". Anything that meets the one-third requirement should be accepted, but currently, there is no data to prove that these can meet the one-third requirement. He stated that this proposal specifies that the size of the test draft be in two minutes but has no explanation for the size, and it conflicts with the previous proposal that said that larger test drafts were needed. He also stated that the definition for "field reference standard meter" is vague and insufficient, and the requirements for accuracy and repeatability are not defined. He commented that a NIST 105 series handbook is not yet established for these and that there are currently no test procedures or parameters for performance requirements to demonstrate these systems can meet the requirements. The definition would apply to all codes and more study and assessment is needed. He commented that more data is needed before this is moved forward and that the items should be given a "Developing" status.

Mr. Constantine Cotsoradis (Flint Hills Resources) provided comments, at this time, intending to address item MFM-2 (see Item MFM-2 for comments).

Mr. Keilty asked the Committee that it be noted that the 2 previous commenters, Mr. Oppermann and Mr. Cotsoradis, were speaking to Stand Alone Items LPG-4 and MFM-2 and not only Block-5.

Mr. Ross Andersen (New York, retired) commented that all standards are a transfer standard, transferred from one measurement to another. He stated that what is needed is to make sure that the standard we use is accurate to one-third of the applied tolerance. In regard to the data that has been discussed, he asks where is the data for what we use now? There is none. It was just selected. He stated that what we need is one test method as the "referee standard" and that, whatever test method is used, it can agree with the reference.

During the Committee's work session, the Committee agreed to recommend that this block of items move forward as "Developing". The Committee also agreed that all the Block 5 items, as well as LPG-4 and MFM-2, items are related to the Block 4 items due to terminology and that the submitter of Block 4 (OWM) provide detail of their developing language to the submitter of the related items (Endress + Hauser Flowtec AG USA) to prevent conflicting terms as they are considered during future meetings.

At the 2018 NCWM Annual Meeting, the submitter provided an update where Ms. Diane Lee (OWM) noted that the terminology agreed to in Block 4 would impact the terminology used in Block 5 agenda items. She also reiterated NIST OWM's comments on additional data needed to support the NIST Fundamental Considerations and the work that NIST OWM will be doing to collect data on the use of master meters with the purchase of six Coriolis meters to collect and review data.

The Committee received written comments from Seraphin Test Measure Company on all items in Block 4 regarding transfer standards raising several concerns and recommending the items remain Developing status until such time when those concerns have been resolved. The Committee agreed to carryover this block of items on its 2019 agenda to allow for further discussion and development of these proposals.

At the 2019 NCWM Interim Meeting, the Committee heard comments to agenda items Block 1, Block 2, LPG-3 and MFM-5 together. During their work session, the Committee considered the comments during the opening hearing and recommended that Block 1, Block 2, LPG-3 and MFM-5 agenda items be combined with GEN-3 and gave these items an Assign status.

At the 2019 NCWM Annual Meeting, the Block 2 items were combined with GEN-3, Block-1, LPG-3, and MFM-5 to be considered together as a single item. See (NEW) Block 1 for status and additional details on these (B1) combined items.

NIST OWM: See comments under the first item (GEN-3) included under the NEW Block 1.

This publication is available free of charge from: https://doi.org/10.6028/NIST.SP.1253

Regional Association Comments:
At the WWMA 2018 fall Annual Meeting, the WWMA recommends this item be addressed together with the items in Block 1; Gen-4; LPG-3; and MFM-5 and designate the status as Developing. For details, see the "Comments and Justification" in Block 1.

At the NEWMA 2019 spring Annual Meeting the New Block 1 (B1) now includes all Block 2 (B2) items, per NCWM S&T Committee. No additional comments were heard on the former Block 2 items. Please see GEN-3 for comments. The Committee recommends this as an Assigned item on the NCWM S&T Committee agenda.

At the CWMA 2019 spring Annual Meeting, Mr. Russ Vires (Mettler Toledo LLC) speaking on behalf of the SMA, stated support for Block 1 but also stated that GEN-3 needs development because the definition should include all device types if it is to be added to NIST HB 44. Ms. Lee commented they have purchased Coriolis meters to begin data collection. Mr. Richard Suiter (Richard Suiter Consulting), wants a balanced work group with old and new ways of testing, to include petroleum marketers, scale manufacturers, large prover manufacturers, and device users. Kansas W&M commented NIST HB 105 will need to be developed and to proceed cautiously with data collection.

At the SWMA 2018 fall Annual Meeting, they heard from NIST OWM noting that these items were similar in purpose to the items in Block 1, Gen-4, LPG-3, MFM-5 and asked the SWMA to consider that the proposals be combined in one block so that items may be worked on by the submitters of the items. SWMA received written comment from Seraphin that the items mentioned above were similar, although the terminology proposed was different.

The SWMA heard from the Scale Manufactures Association that they looked forward to the further development of the item. SWMA does recognize that GEN-4, LPG-3 and MFM-5 are different in their purpose but use language that is common to all the proposals and which is specifically addressed in Block 1 and Block 2 items. SWMA recommends that these items remain developing and that the submitters of these items should work out the differences in terminology before moving the items forward.

Additional letters, presentations, and data may have been part of the Committee's consideration and were posted on the NCWM website during the time this item was on the Committee's agenda. To the extent possible, comments and positions from such documents have been summarized in the committee's report along with comments heard during the Committee's hearings.

B1: LPG-3 A N.3. Test Drafts.

(Original item and title for LPG-3 items that were included on the 2019 NCWM S&T Interim Meeting agenda.)

[This item has been combined with GEN-3, B1, B2, and MFM-5 as part of NEW Block 1]

Source:
Endress + Hauser Flowtec AG USA (2015)

Purpose:
Allow transfer standard meters to be used to test and place into service dispensers and delivery system flow meters.

Item Under Consideration:
Amend NIST Handbook 44 LPG and Anhydrous Ammonia Liquid-Measuring Devices as follows:

This publication is available free of charge from: https://doi.org/10.6028/NIST.SP.1253

N.3. Test Drafts.

N.3.1. Minimum Test - Test drafts should be equal to at least the amount delivered by the device in 1 minute at its normal discharge rate.

(Amended 1982)

N.3.2. Field Reference Standard Meter Test. – The minimum quantity for any test draft shall be equal to or greater than the amount delivered in one minute at the flow rate being tested.

(Added 20XX)

Background/Discussion:
The use of transfer standards is recognized in Code sections 3.34 Cryogenic Liquid-Measuring Devices Code and 3.38 Carbon Dioxide Liquid-Measuring Devices Code and 3.39 Hydrogen Gas-Measuring Devices – Tentative Code. Transfer standard is only defined for testing cryogenic liquid measuring devices. It has been pointed out that the term transfer standard is not correct and that field reference standard meters may be more appropriate. See new the item under consideration, updated on September 8, 2017.

Field evaluation of LPG meters and CNG dispensers and LNG dispensers is very difficult using volumetric and gravimetric field standards and methods. The tolerances for these applications are such that using field reference standard meters are more efficient and safer. With CNG and LNG and LPG applications, the field reference standard meters are placed in-line with the delivery system as it is used to fill tanks and vehicles. The use of field reference standard meters eliminates return to storage issues. The use of field reference standard meters is easier and faster compared to the use of traditional field standards. The cost of using field reference standard meters and transporting them is much less than the cost of traditional field provers and standards.

Recognition in NIST Handbook 44 will enable States to allow field reference standard meters to place systems into service and for field enforcement.

Volumetric field provers and gravimetric field proving are susceptible to environmental influences. The State of Colorado uses a field reference standard meter to test propane delivery truck meters. The State of Nebraska has used a field reference standard meter to test agricultural chemical meters. Other states have asked that there be recognition in NIST HB 44 in order for their State to allow the use of field reference standard meters.

In some applications, field reference standard meters are not more accurate than the meters used in the application. For that reason, longer test drafts and possibly more tests may need to be run.

The State of California is purported to have conducted a short study of field reference standard meters in the past. The conclusion did not lead to wide adoption of the practice.

Section 3.37 Mass Flow Meters user requirement U.R.3.8. Return of Product to Storage, Retail Compressed Natural Gas Dispensers requires that the natural gas which is delivered into the test container must be returned to storage. This is difficult and most often not complied with when the test vessel contents are released to atmosphere.

Additional information regarding this issue can be found in the 2015-2018 NCWM S&T Committee Final Reports.

During the 2018 NCWM Interim Meeting, the Committee heard from Mr. Michael Keilty (Endress + Hauser Flowtec AG USA), submitter of the item, expressing that this item has been on the Committee's agenda since 2014. Mr. Keilty felt that the language in the proposal was appropriate and asked that this item be moved forward as a "Voting" item. Others spoke in opposition to this move and requested that the item remain Developing.

During the Committee's work session, the members considered the comments heard on this item. The Committee agreed to recommend that this item remain "Developing". The Committee also agreed that items LPG-4, MFM-2, and all Block 5 items are related to the Block 4 items due to terminology. The Committee recommends that the submitter of the Block 4 Items (NIST OWM) provide detail of their developing language to the submitter of the related items (Endress + Hauser Flowtec AG USA) to prevent conflicting terms as they are considered during future meetings.

This publication is available free of charge from: https://doi.org/10.6028/NIST.SP.1253

During the 2018 NCWM Annual Meeting, the submitter provided an update for this item. In consideration of the comments from the submitter and the analysis from OWM, the Committee agreed that the terminology in this item should align with the terminology that will be used in the NIST OWM's Block 4 Items (B4) that are still being developed. The Committee agreed that the item should remain a Developing item and recommends that the OWM provide detail on their Developing items in Block 4 to the submitter so that they can better align.

At the 2019 NCWM Interim Meeting, the Committee heard comments to agenda items Block 1, Block 2, LPG-3 and MFM-5 together. During their work session, the Committee considered the comments during the opening hearing and recommended that Block 1, Block 2, LPG-3 and MFM-5 agenda items be combined with GEN-3 and gave these items an Assign status.

At the 2019 NCWM Annual Meeting, the LPG-3 item was combined with GEN-3, Block 1, Block 2, and MFM-5 to be considered together as a single item. See (NEW) Block 1 for status and additional details on these (B1) combined items.

Additional information can be found in the 2018 NCWM Annual Report and the 2019 NCWM Annual Meeting Report.

NIST OWM: See comments under the first item (GEN-3) included under the NEW Block 1.

Regional Association Comments:
At the WWMA 2018 fall Annual Meeting, the WWMA recommends this item be addressed together with the items in Block 1; Gen-4; LPG-3; and MFM-5 and designated the status as Developing. For details, see the "Comments and Justification" in Block 1.

At the NEWMA 2018 fall Interim Meeting, the NEWMA recommended this as a Developing item and part of a group (with Block 1, Block 2, LPG-3, and MFM-5).

At the NEWMA 2019 spring Annual Meeting, Mr. Russ Vires (Mettler Toledo LLC), speaking on behalf of the SMA, reported during the Committee's open hearings, the SMA opposes GEN 3 as written. Mr. Vires stated the SMA does not believe that the item has been fully developed and that a proposal is put forth for the definition of a field standard that applies to measuring devices but omits other devices such as weighing equipment. Mr. Vires also commented that the SMA does support proposed changes for these items also found in the new Block 1, SCL 4; ABW 1, and AWS 1 and looks forward to further development. Mr. Mike Sikula (New York) commented that it is important to consider that requirements found in NIST HB 44 Appendix A, Section 3.2. "Tolerances for Standards" (less than one-third the value of the minimum tolerance applied) cannot always be met but the use of alternative standards may be the only way to get the job done or the only way to do a job safely. Mr. Bob Murnane (Seraphin) commented that he would like to have clear, simple definitions for "transfer standard" and "field standard". He also thinks it may be best to start fresh and focus on the intent of the item. NEWMA recommended that the development of this item continue as an Assigned item.

At the SWMA 2018 fall Annual Meeting, the SWMA heard from NIST OWM recommending that this item be included in a block along with items listed as Block 1, Block 2, GEN-4 and MFM-5. SWMA received comments from Seraphin that this item had different criteria for test drafts than those that were included in Block 2 items. SWMA encourages the submitters of these items to work to a common proposal and recommends this as a Developing item.

At the CWMA 2018 fall Interim Meeting, the Committee heard no comments during open hearings. CWMA questions the need for G-T.5. and believes the terms included in the Transfer Standard definition are already defined throughout NIST Handbook 44. CWMA recommended this as a Developing item.

2019 spring Annual Meeting: Mr. Vires, speaking on behalf of the SMA, reported during the Committee's open hearings support for Block 1 but also stated that GEN-3 needs development because the definition should include all device types if it is to be added to NIST HB 44. Ms. Diane Lee (NIST OWM) commented they have purchased Coriolis meters to begin data collection. Mr. Richard Suiter (Richard Suiter Consulting), wants a balanced work group with old and new ways of testing, to include petroleum marketers, scale manufacturers, large prover manufacturers,

and device users. Kansas W&M commented NIST HB 105 will need to be developed and to proceed cautiously with data collection.

Additional letters, presentations, and data may have been part of the Committee's consideration and were posted on the NCWM website during the time this item was on the Committee's agenda. To the extent possible, comments and positions from such documents have been summarized in the Committee's report along with comments heard during the Committee's hearings.

This publication is available free of charge from: https://doi.org/10.6028/NIST.SP.1253

B1: MFM-5 A N.3. Test Drafts.

(Original item and title for LPG-3 items that were included on the 2019 NCWM S&T Interim Meeting agenda.)

[This item has been combined with GEN-3, B1, B2, and LPG-3 as part of NEW Block 1]

Source:
Endress + Hauser Flowtec AG USA (2015)

Purpose:
Allow transfer standard meters to be used to test and place into service dispensers and delivery system flow meters.

Item Under Consideration:
Amend NIST Handbook 44 Mass Flow Meters Code as follows:

N.3. Test Drafts. –

N.3.1 Minimum Test - The minimum test shall be one test draft at the maximum flow rate of the installation and one test draft at the minimum flow rate. More tests may be performed at these or other flow rates. (See T.3. Repeatability.)

(Amended 1982 **and 20XX)**

N.3.2. Field Reference Standard Meter Test. – The minimum quantity for any test draft shall be equal to or greater than the amount delivered in one minute at the flow rate being tested.

(Added 20XX)

Background/Discussion:
The use of transfer standards is recognized in Code sections 3.34 Cryogenic Liquid-Measuring Devices Code and 3.38 Carbon Dioxide Liquid-Measuring Devices Code and 3.39 Hydrogen Gas-Measuring Devices – Tentative Code. Transfer standard is only defined for testing cryogenic liquid measuring devices. It has been pointed out that the term transfer standard is not correct and that field reference standard meters may be more appropriate. See new the item under consideration, updated on September 8, 2017.

Field evaluation of LPG meters and CNG dispensers and LNG dispensers is very difficult using volumetric and gravimetric field standards and methods. The tolerances for these applications are such that using field reference standard meters are more efficient and safer. With CNG and LNG and LPG applications, the field reference standard meters are placed in-line with the delivery system as it is used to fill tanks and vehicles. The use of field reference standard meters eliminates return to storage issues. The use of field reference standard meters is easier and faster compared to the use of traditional field standards. The cost of using field reference standard meters and transporting them is much less than the cost of traditional field provers and standards.

Recognition in NIST Handbook 44 will enable States to allow field reference standard meters to place systems into service and for field enforcement.

Volumetric field provers and gravimetric field proving are susceptible to environmental influences. The State of Colorado uses a field reference standard meter to test propane delivery truck meters. The State of Nebraska has used

a field reference standard meter to test agricultural chemical meters. Other states have asked that there be recognition in NIST HB 44 in order for their State to allow the use of field reference standard meters.

In some applications, field reference standard meters are not more accurate than the meters used in the application. For that reason, longer test drafts and possibly more tests may need to be run.

The State of California is purported to have conducted a short study of field reference standard meters in the past. The conclusion did not lead to wide adoption of the practice.

Section 3.37 Mass Flow Meters user requirement U.R.3.8. Return of Product to Storage, Retail Compressed Natural Gas Dispensers requires that the natural gas which is delivered into the test container must be returned to storage. This is difficult and most often not complied with when the test vessel contents are released to atmosphere. States often have difficulties in remote locations finding suitable field reference equipment.

Additional background information on this item can be found in the NCWM S&T Committee's Final Reports from 2015-2018.

During the 2018 NCWM Interim Meeting, the Committee heard from Mr. Michael Keilty (Endress + Hauser Flowtec AG USA), submitter of the item, expressing that this item has been on the Committee's agenda since 2014. Mr. Keilty felt that the language in the proposal was appropriate and asked that this item be moved forward as a "Voting" item. Others spoke in opposition to this move and requested that the item remain Developing.

During the Committee's work session, the members considered the comments heard on this item. The Committee agreed to recommend that this item remain "Developing". The Committee also agreed that items LPG-4, MFM-2, and all Block 5 Items are related to the Block 4 items due to terminology. The Committee recommends that the submitter of the Block 4 Items (OWM) provide detail of their developing language to the submitter of the related items (Endress + Hauser Flowtec AG USA) to prevent conflicting terms as they are considered during future meetings.

During the 2018 NCWM Annual Meeting, the submitter provided an update for this item. In consideration of the comments from the submitter and the analysis from NIST OWM, the Committee agreed that the terminology in this item should align with the terminology that will be used in the NIST OWM's Block 4 Items (B4) that are still being developed. The Committee agreed that the item should remain a Developing item and recommends that the OWM provide detail on their Developing items in Block 4 to the submitter so that they can better align.

At the 2019 NCWM Interim Meeting, the Committee heard comments to agenda items Block 1, Block 2, LPG-3 and MFM-5 together. During their work session, the Committee considered the comments during the opening hearing and recommended that Block 1, Block 2, LPG-3 and MFM-5 agenda items be combined with GEN-3 and gave these items an Assign status.

At the 2019 NCWM Annual Meeting, the LPG-3 item was combined with GEN-3, Block 1, Block 2, and MFM-5 to be considered together as a single item. See (NEW) Block 1 for status and additional details on these (B1) combined items.

NIST OWM: See comments under the first item (GEN-3) included under the NEW Block 1.

Regional Association Comments:
At the WWMA 2018 fall Annual Meeting they recommended this item be addressed together with the items in Block 1 and 2; and MFM-2; LPG-3 and designated the status as Developing. For details, see the "Comments and Justification" in Block 1.

At the NEWMA 2018 fall Interim Meeting, they recommended this as a Developing Item and part of a group (with Block 1, Block 2, LPG-3, and MFM-5).

At the NEWMA 2019 spring Annual Meeting, Mr. Russ Vires (Mettler Toledo LLC), speaking on behalf of the SMA, reported during the Committee's open hearings the SMA opposes GEN 3 as written. Mr. Vires stated the SMA does

This publication is available free of charge from: https://doi.org/10.6028/NIST.SP.1253

This publication is available free of charge from: https://doi.org/10.6028/NIST.SP.1253

not believe that the item has been fully developed and that a proposal is put forth for the definition of a field standard that applies to measuring devices but omits other devices such as weighing equipment. Mr. Vires also commented that the SMA does support proposed changes for these items also found in the new Block 1: SCL 4; ABW 1: and AWS 1 and looks forward to further development. Mr. Mike Sikula (New York) commented that it is important to consider that requirements found in NIST HB 44 Appendix A, Section 3.2. "Tolerances for Standards" (less than one-third the value of the minimum tolerance applied) cannot always be met but the use of alternative standards may be the only way to get the job done or the only way to do a job safely. Mr. Bob Murnane (Seraphin) commented that he would like to have clear, simple definitions for "transfer standard" and "field standard." He also thinks it may be best to start fresh and focus on the intent of the item. NEWMA recommended that the development of this item continue as an Assigned item.

At the SWMA 2018 fall Annual Meeting, the SWMA heard comment that this should be included in a block with Block 1, Block 2, GEN-4 and LPG-3. NIST OWM also notes that there was concern raised with the appropriateness of the minimum delivery time. SWMA encourages this item be included in the block and consider the minimum delivery time as it is being developed.

At the CWMA 2018 fall Interim Meeting, the Committee heard no comments during open hearings. CWMA questions the need for G-T.5., and believes the terms included in the Transfer Standard definition are already defined throughout NIST Handbook 44. CWMA recommended this as a Developing item.

At the CWMA 2019 spring Annual Meeting, Mr. Vires, speaking on behalf of the SMA, reported during the Committee's open hearings support for Block 1 but also stated that GEN-3 needs development because the definition should include all device types if it is to be added to NIST HB 44. Ms. Diane Lee (NIST OWM) commented they have purchased Coriolis meters to begin data collection. Mr. Richard Suiter (Richard Suiter Consulting), wants a balanced work group with old and new ways of testing, to include petroleum marketers, scale manufacturers, large prover manufacturers, and device users. Kansas W&M commented NIST HB 105 will need to be developed and to proceed cautiously with data collection.

Additional letters, presentations, and data may have been part of the Committee's consideration and were posted on the NCWM website during the time this item was on the Committee's agenda. To the extent possible, comments and positions from such documents have been summarized in the Committee's report along with comments heard during the Committee's hearings.

BLOCK 3 ITEMS (B3) ADDRESS DEVICES AND SYSTEMS ADJUSTED USING A REMOVABLE DIGITAL STORAGE DEVICE

(This item was Adopted)

B3: GEN-2	V	G-S.8.2. Devices and Systems Adjusted Using Removable Digital Storage Device
B3: SCL-5	V	S.1.11. Provision for Sealing.
B3: BCS-1	V	S.5. Provision for Sealing.
B3: ABW-2	V	S.1.6. Provision for Sealing Adjustable Components on Electronic Devices.
B3: AWS-2	V	S.1.3. Provision for Sealing.
B3: LMD-1	V	S.2.2. Provision for Sealing.
B3: VTM-2	V	S.2.2. Provision for Sealing.
B3: LPG-1	V	S.2.2. Provision for Sealing.
B3: HGV-1	V	S.2.2. Provision for Sealing.
B3: CLM-2	V	S.2.5. Provision for Sealing.
B3: MLK-1	V	S.2.3. Provision for Sealing.
B3: WTR-1	V	S.2.1. Provision for Sealing.
B3: MFM-1	V	S.3.5. Provision for Sealing.
B3: CDL-3	V	S.2.5. Provision for Sealing.
B3: HGM-3	V	S.3.3. Provision for Sealing.
B3: EVF-1	V	S.3.3. Provision for Sealing.

B3: TIM-1 V S.4. Provision for Sealing.
B3: GMA-1 V S.2.5. Provision for Sealing.
B3: MDM-1 V S.1.11. Provision for Sealing. Source.
NIST OWM (2013)

Purpose:
Expand the scope of definition to cover instances where the "other device", as noted in the current definition, may be necessary to the operation of the weighing or measuring device or which may be considered a permanent part of that device.

B3: GEN-2 V G-S.8.2. Devices and Systems Adjusted Using Removable Digital Storage Device

Item Under Consideration:
Modify the General Code as follows:

G-S.8.2. Devices and Systems Adjusted Using Removable Digital Storage Device. - For devices and systems in which the configuration or calibration parameters can be changed by use of a removable digital storage device*, such as a secure digital (SD) card, USB flash drive, etc., security shall be provided for those parameters using either (1) an event logger in the device; or (2) a physical seal that must be broken in order to remove the digital storage device from the device (or system). If security is provided using an event logger, the event logger shall include an event counter (000 to 999), the parameter ID, the date and time of the change, and the new value of the parameter. A printed copy of the information must be available on demand through the device or through another on-site device. In addition to providing a printed copy of the information, the information may be made available electronically. The event logger shall have a capacity to retain records equal to 10 times the number of sealable parameters in the device, but not more than 1000 records are required. (Note: Does not require 1000 changes to be stored for each parameter.)

***Applies only to removable digital storage devices that must remain in the device or system for it to be operational.**
(Added 2019)

B3: SCL-5 V S.1.11. Provision for Sealing.

Item Under Consideration:

Modify the Scales Code as follows:

S.1.11.1 Devices and Systems Adjusted Using a Removable Digital Storage Device. - For devices and systems in which the calibration or configuration parameters, as defined in Appendix D, can be changed by use of a removable digital storage device, security shall be provided for those parameters as specified in G-S.8.2.

S.1.11.2 All Other Devices. - ***Except on Class I scales and devices specified in S.1.11.1. the following provisions for sealing applies:***

(a) Provision shall be made for applying a security seal in a manner that requires the security seal to be broken before an adjustment can be made to any component affecting the performance of an electronic device. [Nonretroactive as of January 1, 1979]

(b) A device shall be designed with provision(s) for applying a security seal that must be broken, or for using other approved means of providing security (e.g., data change audit trail available at the time of inspection),

This publication is available free of charge from: https://doi.org/10.6028/NIST.SP.1253

before any change that detrimentally affects the metrological integrity of the device can be made to any electronic mechanism.
[Nonretroactive as of January 1, 1990]

(c) Audit trails shall use the format set forth in Table S.1.11.
[Nonretroactive as of January 1, 1995]

A device may be fitted with an automatic or a semi-automatic calibration mechanism. This mechanism shall be incorporated inside the device. After sealing, neither the mechanism nor the calibration process shall facilitate fraud. (Amended 1989, 1991, 1993**,** and **2019**)

B3: BCS-1 V S.5. Provision for Sealing.

Item Under Consideration:
Modify the Belt-Conveyor Scale Systems Scales Code as follows:

S.5. Provision for Sealing. – **For devices and systems in which the configuration or calibration parameters can be changed by use of a removable digital storage device, security shall be provided for those parameters as specified in G-S.8.2.** ***For all other devices, the following provisions for sealing apply:***

A device shall be designed using the format set forth in Table S.5. with provision(s) for applying a security seal that must be broken, or for using other approved means of providing security (e.g. data change audit trail available at the time of inspection), before any change that affects the metrological integrity of the device can be made to any electronic mechanism.
[Nonretroactive as of January 1, 1999]
(Added 1998) **(Amended 2019)**

B3: ABW-2 V S.1.6. Provision for Sealing Adjustable Components on Electronic Devices.

Item Under Consideration:
Modify the Automatic Bulk Weighing Systems Code as follows:

S.1.6. Provision for Sealing Adjustable Components on Electronic Devices. – **For devices and systems in which the configuration or calibration parameters can be changed by use of a removable digital storage device, security shall be provided for those parameters as specified in G-S.8.2. For parameters adjusted using other means, p**~~P~~rovision shall be made for applying a security seal in a manner that requires the security seal to be broken before an adjustment can be made to any component affecting the performance of the device.
(Amended 2019)

B3: AWS-2 V S.1.3. Provision for Sealing.

Item Under Consideration:
Modify the Automatic Weighing Systems Code as follows:

S.1.3. Provision for Sealing.

(a) **Automatic Weighing Systems, Except Automatic Checkweighers.** – **For devices and systems in which the configuration or calibration parameters can be changed by use of a removable digital storage device, security shall be provided for those parameters as specified in G-S.8.2.**

This publication is available free of charge from: https://doi.org/10.6028/NIST.SP.1253

This publication is available free of charge from: https://doi.org/10.6028/NIST.SP.1253

For parameters adjusted using other means, a ~~A~~ device shall be designed with provision(s) as specified in Table S.1.3. Categories of Device and Methods of Sealing for applying a security seal that must be broken, or for using other approved means of providing security (e.g., data change audit trail available at the time of inspection), before any change that detrimentally affects the metrological integrity of the device can be made to any electronic mechanism.

(b) **For Automatic Checkweighers.** – Security seals are not required in applications where it would prohibit an authorized user from having access to the calibration functions of a device.

(Amended 2019)

B3: LMD-1 V S.2.2. Provision for Sealing.

Item Under Consideration:
Modify the Liquid Measuring Devices Code as follows:

S.2.2. Provision for Sealing – **For devices and systems in which the configuration or calibration parameters can be changed by use of a removable digital storage device, security shall be provided for those parameters as specified in G-S.8.2. For parameters adjusted using other means, the following applies:**

Adequate provision shall be made for an approved means of security (e.g., data change audit trail) or for physically applying a security seal in such a manner that requires the security seal to be broken before an adjustment or interchange can be made of:

(a) any measuring or indicating element;

(b) any adjustable element for controlling delivery rate when such rate tends to affect the accuracy of deliveries; and

(c) any metrological parameter that will affect the metrological integrity of the device or system.

When applicable, the adjusting mechanism shall be readily accessible for purposes of affixing a security seal.
*[Audit trails shall use the format set forth in Table S.2.2.]**
*[*Nonretroactive and Enforceable as of January 1, 1995]*
(Amended 1991, 1993, 1995, 2006**,** and **2019**)

B3: VTM-2 V S.2.2. Provision for Sealing.

Item Under Consideration:
Modify the Vehicle Tank Meters Code as follows:

S.2.2. Provision for Sealing. – **For devices and systems in which the configuration or calibration parameters can be changed by use of a removable digital storage device, security shall be provided for those parameters as specified in G-S.8.2. For parameters adjusted using other means, the following applies:**

Adequate provision shall be made for an approved means of security (e.g., data change audit trail) or for physically applying a security seal in such a manner that requires the security seal to be broken before a change or an adjustment or interchange may be made of:

(a) any measuring or indicating element;

(b) any adjustable element for controlling delivery rate when such rate tends to affect the accuracy of deliveries; and

(c) any metrological parameter that will affect the metrological integrity of the device or system.

When applicable, the adjusting mechanism shall be readily accessible for purposes of affixing a security seal.
*[Audit trails shall use the format set forth in Table S.2.2. Categories of Device and Methods Sealing.]**
*[*Nonretroactive as of January 1, 1995]*
(Amended 2006 **and 2019**)

B3: LPG-1 V S.2.2. Provision for Sealing.

Item Under Consideration:
Modify the LPG and Anhydrous Ammonia Liquid-Measuring Devices Code as follows:

S.2.2. Provision for Sealing. For devices and systems in which the configuration or calibration parameters can be changed by use of a removable digital storage device, security shall be provided for those parameters as specified in G-S.8.2. For parameters adjusted using other means, the following applies:

Adequate provision shall be made for an approved means of security (e.g., data change audit trail) or for physically applying a security seal in such a manner that requires the security seal to be broken before an adjustment or interchange may be made of:

(a) any measuring or indicating element;

(b) any adjustable element for controlling delivery rate, when such rate tends to affect the accuracy of deliveries; and

(c) any metrological parameter that will affect the metrological integrity of the device or system.

When applicable, the adjusting mechanism shall be readily accessible for purposes of affixing a security seal.

*[Audit trails shall use the format set forth in Table S.2.2. Categories of Device and Methods of Sealing.]**
*[*Nonretroactive as of January 1, 1995]*
(Amended 2006 **and 2019**)

B3: HGV-1 V S.2.2. Provision for Sealing.

Item Under Consideration:
Modify the Hydrocarbon Gas Vapor-Measuring Devices Code as follows:

S.2.2. Provision for Sealing. For devices or systems in which the configuration or calibration parameters can be changed by use of a removable digital storage device, security shall be provided for those parameters as specified in G-S.8.2. For parameters adjusted using other means, the following applies:

Adequate provision shall be made for applying security seals in such a manner that no adjustment or interchange may be made of any measurement element.
(Amended 2019)

This publication is available free of charge from: https://doi.org/10.6028/NIST.SP.1253

This publication is available free of charge from: https://doi.org/10.6028/NIST.SP.1253

B3: CLM-2 V S.2.5. Provision for Sealing.

Item Under Consideration:
Modify Cryogenic Liquid-Measuring Devices Code as follows:

S.2.5. Provision for Sealing. – **For devices or systems in which the configuration or calibration parameters can be changed by use of a removable digital storage device, security shall be provided for those parameters as specified in G-S.8.2. For parameters adjusted using other means, the following applies:**

Adequate provision shall be made for an approved means of security (e.g., data change audit trail) or for physically applying a security seal in such a manner that requires the security seal to be broken before an adjustment or interchange may be made of:

(a) any measuring or indicating element;

(b) any adjustable element for controlling delivery rate when such rate tends to affect the accuracy of deliveries;

(c) any automatic temperature or density compensating system; and

(d) any metrological parameter that will affect the metrological integrity of the device or system.

When applicable, any adjusting mechanism shall be readily accessible for purposes of affixing a security seal.

[Audit trails shall use the format set forth in Table S.2.5. Categories of Device and Methods of Sealing]*
[*Nonretroactive as of January 1, 1995]
(Amended 2006 **and 2019**)

B3: MLK-1 V S.2.3. Provision for Sealing.

Item Under Consideration:
Modify Milk Meters Code as follows:

S.2.3. Provision for Sealing. – **For devices and systems in which the configuration or calibration parameters can be changed by use of a removable digital storage device, security shall be provided for those parameters as specified in G-S.8.2. For parameters adjusted using other means, the following applies:**

Adequate provision shall be made for an approved means of security (e.g., data change audit trail) or for physically applying a security seal in such a manner that requires the security seal to be broken before an adjustment or interchange may be made of any:

(a) measuring element or indicating element;

(b) adjustable element for controlling delivery rate, when such rate tends to affect the accuracy of deliveries; and

(c) metrological parameter that will affect the metrological integrity of the device or system.

When applicable, the adjusting mechanism shall be readily accessible for purposes of affixing a security seal.

[Audit trails shall use the format set forth in Table S.2.3. Categories of Device and Methods of Sealing]
[*Nonretroactive as of January 1, 1995]*
(Amended 2006 **and 2019**)

This publication is available free of charge from: https://doi.org/10.6028/NIST.SP.1253

B3: WTR-1 V S.2.1. Provision for Sealing.

Item Under Consideration:
Modify Water Meters Code as follows:

S.2.1. Provision for Sealing. – **For devices or systems in which the configuration or calibration parameters can be changed by use of a removable digital storage device, security shall be provided for those parameters as specified in G-S.8.2. For parameters adjusted using other means, the following applies:**

Adequate provision shall be made for applying security seals in such a manner that no adjustment or interchange may be made of:

(a) any measurement elements; and

(b) any adjustable element for controlling delivery rate when such rate tends to affect the accuracy of deliveries.

The adjusting mechanism shall be readily accessible for purposes of affixing a security seal.
(Amended 2019)

B3: MFM-1 V S.3.5. Provision for Sealing.

Item Under Consideration:
Modify Mass Flow Meters Code as follows:

S.3.5. Provision for Sealing. – **For devices or systems in which the configuration or calibration parameters can be changed by use of a removable digital storage device, security shall be provided for those parameters as specified in G-S.8.2. For parameters adjusted using other means, the following applies:**

Adequate provision shall be made for an approved means of security (e.g., data change audit trail) or physically applying security seals in such a manner that no adjustment or interchange may be made of:

(a) any measuring or indicating element;

(b) any adjustable element for controlling delivery rate when such rate tends to affect the accuracy of deliveries;

(c) the zero adjustment mechanism; and

(d) any metrological parameter that will affect the metrological integrity of the device or system.

When applicable, the adjusting mechanism shall be readily accessible for purposes of affixing a security seal.

*[Audit trails shall use the format set forth in Table S.3.5. Categories of Device and Methods of Sealing]**
*[*Nonretroactive as of January 1, 1995]*
(Amended 1992, 1995, 2006**,** and **2019**)

B3: CDL-3 V S.2.5. Provision for Sealing.

Item Under Consideration:
Modify Carbon Dioxide Liquid-Measuring Devices Code as follows:

S.2.5. Provision for Sealing. – **For devices and systems in which the configuration or calibration parameters can be changed by use of a removable digital storage device, security shall be provided for those parameters as specified in G-S.8.2. For parameters adjusted using other means, the following applies:**

Adequate provision shall be made for an approved means of security (e.g., data change audit trail) or for physically applying a security seal in such a manner that requires the security seal to be broken before an adjustment or interchange may be made of:

(a) any measuring or indicating element;

(b) any adjustable element for controlling delivery rate when such rate tends to affect the accuracy of deliveries;

(c) any automatic temperature or density compensating system; and

(d) any metrological parameter that will affect the metrological integrity of the device or system.

When applicable any adjusting mechanism shall be readily accessible for purposes of affixing a security seal.

*[Audit trails shall use the format set forth in Table S.2.5. Provision for Sealing]**
*[*Nonretroactive as of January 1, 1995]*
(Amended 2006 **and 2019**)

B3: HGM-3 V S.3.3. Provision for Sealing.

Item Under Consideration:
Modify Hydrogen Gas-Measuring Devices Tentative Code as follows:

S.3.3. Provision for Sealing. – **For devices and systems in which the configuration or calibration parameters can be changed by use of a removable digital storage device, security shall be provided for those parameters as specified in G-S.8.2. For parameters adjusted using other means, the following applies:**

Adequate provision shall be made for an approved means of security (e.g., data change audit trail) or physically applying security seals in such a manner that no adjustment may be made of:

(a) each individual measurement element;

(b) any adjustable element for controlling delivery rate when such rate tends to affect the accuracy of deliveries;

(c) the zero adjustment mechanism; and

(d) any metrological parameter that detrimentally affects the metrological integrity of the device or system.

When applicable, the adjusting mechanism shall be readily accessible for purposes of affixing a security seal. Audit trails shall use the format set forth in Table S.3.3. Categories of Device and Methods of Sealing.
(Amended 2019)

This publication is available free of charge from: https://doi.org/10.6028/NIST.SP.1253

This publication is available free of charge from: https://doi.org/10.6028/NIST.SP.1253

B3: EVF-1 V S.3.3. Provision for Sealing.

Item Under Consideration:
Modify Electric Vehicle Refueling Systems Code as follows:

S.3.3. Provision for Sealing. – **For devices or systems in which the configuration or calibration parameters can be changed by use of a removable digital storage device, security shall be provided for those parameters as specified in G-S.8.2. For parameters adjusted using other means, the following applies:**

Adequate provision shall be made for an approved means of security (e.g., data change audit trail) or physically applying security seals in such a manner that no adjustment may be made of:

(a) each individual measurement element;

(b) any adjustable element for controlling voltage or current when such control tends to affect the accuracy of deliveries;

(c) any adjustment mechanism that corrects or compensates for energy loss between the system and vehicle connection; and

(d) any metrological parameter that detrimentally affects the metrological integrity of the EVSE or system.

When applicable, the adjusting mechanism shall be readily accessible for purposes of affixing a security seal.
(Amended 2019)

B3: TIM-1 V S.4. Provision for Sealing.

Item Under Consideration:
Modify Timing Devices Code as follows:

S.4. Provisions for Sealing. – **For devices or systems in which the configuration or calibration parameters can be changed by use of a removable digital storage device, security shall be provided for those parameters as specified in G-S.8.2. For parameters adjusted using other means,** ~~A~~**a**dequate provisions shall be made to provide security for the timing element.
(Added 2015) **(Amended 2019)**

B3: GMA-1 V S.2.5. Provision for Sealing.

Item Under Consideration:
Modify 5.56.(a) Grain Moisture Meters Code as follows:

S.2.5. Provision for Sealing. – **For devices and systems in which the configuration or calibration parameters can be changed by use of a removable digital storage device, security shall be provided for those parameters as specified in G-S.8.2. For parameters adjusted using other means, the following applies:**

Provision shall be made for applying a security seal in a manner that requires the security seal to be broken, or for using other approved means of providing security (e.g., audit trail available at the time of inspection as defined in Table S.2.5. Categories of Device and Methods of Sealing) before any change that affects the metrological integrity of the device can be made to any mechanism.
(Amended 2019)

This publication is available free of charge from: https://doi.org/10.6028/NIST.SP.1253

B3: MDM-1 V S.1.11. Provision for Sealing.

Item Under Consideration:
Modify Multiple Dimension Measuring Devices Code as follows:

S.1.11. Provision for Sealing. - **For devices and systems in which the configuration or calibration parameters can be changed by use of a removable digital storage device, security shall be provided for those parameters as specified in G-S.8.2. For parameters adjusted using other means, the following applies:**

(a) ~~**A**~~ **The** device **or system** shall be designed with provision(s) for applying a security seal that must be broken, or for using other approved means of providing security (e.g., data change audit trail available at the time of inspection), before any change that detrimentally affects the metrological integrity ~~**of the device**~~ can be made to any measuring element.

(b) Audit trails shall use the format set forth in Table S.1.11. Categories of Devices and Methods of Sealing for Multiple Dimension Measuring Systems.

(Amended 2019)

Background/Discussion:
The Committee initially considered a proposal from the NTEP Grain Analyzer Sector to modify the definition for "remote configuration capability" as follows:

remote configuration capability. – The ability to adjust a weighing or measuring device or change its sealable parameters from or through some other device that ~~**is not**~~ **may or may not** itself **be** necessary to the operation of the weighing or measuring device or ~~**is not**~~ **may or may not be** a permanent part of that device. [2.20, 2.21, 2.24, 3.30, 3.37, 5.56(a)]

(Added 1993, **Amended 20XX**)

The proposal was intended to address the use of removable digital storage devices in grain moisture meters (GGMs). Removable digital storage devices can be used in GMMs as either data transfer devices that are not necessary to the operation of the GMM or as data storage devices which are necessary to the operation of the GMM. If removable data storage devices are necessary to the operation of the device, they are not covered by the current definition of remote configuration capability in NIST HB 44.

A USB flash drive is most likely to be used as a data transfer device. In a typical data transfer application considered by the Grain Sector, the USB flash drive is first connected to a computer with access to the GMM manufacturer's website to download the latest grain calibrations that are then stored in the USB flash drive. The USB flash drive is removed from the computer and plugged into a USB port on the GMM. The GMM is put into remote configuration mode to copy the new grain calibration data into the GMM's internal memory. When the GMM has been returned to normal operating (measuring) mode, the USB flash drive can be removed from the GMM.

Although an SD memory card could also be used as a data transfer device, it is more likely to be used as a data storage device. In a typical "data storage device" application, the SD memory card stores the grain calibrations used on the GMM. The SD memory card must be plugged into an SD memory card connector on a GMM circuit card for the GMM to operate in measuring mode. To install new grain calibrations, the GMM must be turned "off" or put into a mode in which the SD memory card can be safely removed. The SD memory card can either be replaced with an SD memory card that has been programmed with the new grain calibrations or the original SD memory card can be re-programmed with the new grain calibrations in much the same way as that described in the preceding paragraph to copy new grain calibrations into a USB flash drive. In either case, the SD memory card containing the new calibrations must be installed in the GMM for the GMM to operate in measuring mode. In that regard, the SD memory card (although removable) can be considered a permanent part of the GMM in that the GMM cannot operate without it.

Note: In the above example, SD memory card could be any removable flash memory card such as the Secure Digital Standard-Capacity, the Secure Digital High-Capacity, the Secure Digital Extended-Capacity, and the Secure Digital

This publication is available free of charge from: https://doi.org/10.6028/NIST.SP.1253

Input/Output, which combines input/output functions with data storage. These come in three form factors: the original size, the mini size, and the micro size. A Memory Stick is a removable flash memory card format, launched by Sony in 1998, and is also used in general to describe the whole family of Memory Sticks. In addition to the original Memory Stick, this family includes the Memory Stick PRO, the Memory Stick Duo, the Memory Stick PRO Duo, the Memory Stick Micro, and the Memory Stick PRO-HG.

The Committee heard opposition to the proposed changes to the definition, though a number of comments indicated support for changes to adequately address security for weighing and measuring systems adjusted using removable media. Over the course of several years, multiple proposals were presented, and the Grain Analyzer Sector decided to address its concerns through implementation of other requirements specific to grain analyzers. Acknowledging the need to modify sealing requirements to better address systems adjusted using removable media, OWM requested the Committee assign responsibility for this item to OWM.

OWM developed a General Code paragraph to address these removable storage devices and updates to the provision for sealing paragraphs for individual codes were also developed for consideration. Additional information regarding this issue can be found in the 2018 and 2019 NCWM S&T Committee Final Reports.

During the NCWM 2019 Interim Meeting, the Committee heard comments to Agenda Item B3. In addition, position statements from SMA, MMA and an OWM analysis were provided on this item prior to the Interim Meeting. The comments heard during the open hearing, discussed, and/or received prior to the Interim Meeting are summarized below:

Mr. Dmitri Karimov (Liquid Controls) speaking for the Meter Manufacturers Association: MMA supports moving to Voting.

Mr. Russ Vires (Mettler Toledo, LLC) speaking on behalf of the SMA: SMA supports this item.

Mr. Michael Keilty, (Endress + Hauser Flowtec): Supports the changes that NIST OWM made and recommends the item move forward with Voting status.

NIST OWM: Due to a Government shutdown because of a lapse in appropriations, OWM was unable to attend the 2019 NCWM Interim meeting. OWM provided comments to the Committee prior to the Interim Meeting, which are summarized below:

- OWM developed multiple iterations to these proposed changes based on comments from the weights and measures community, including those from the NTEP Measuring Sector, SMA, and others.
- In response to questions raised by a meter manufacturer concerning the connection of a laptop by cable to configure the device, OWM added language to the original proposal to clarify that the proposed General Code requirements applies only to removable digital storage devices that must remain in the device or system for it to be operational.
- During its work session at the July 2018 NCWM Annual Meeting, members of the S&T Committee agreed that the amended version of paragraph G-S.8.2 offered by OWM to address the concerns raised improved clarification. Consequently, the Committee agreed to OWM's request to replace the existing proposed G S.8.2. with the amended version made available by OWM and as shown in the item under consideration.
- Concerning a question raised at the September 2018 WWMA Annual Meeting asking if a device with removable boards and components would be classified under this proposal, OWM clarified the proposal does not prohibit devices that have parts which are disassembled and replaced. The proposal is specific to devices that are designed to be configured using removable media, such as memory cards, flash drives, or other media.
- OWM agrees with the Regional Weights and Measures Associations that these items should be designated as Voting items at the 2019 Interim Meeting.

During the 2019 NCWM S&T Committee Interim Meeting, the S&T Committee considered the comments received or heard during opening hearings and recommended a Voting status for Agenda Item B3.

During the 2019 NCWM Annual Meeting, the Committee heard comments from Mr. Richard Harshman, (NIST OWM), Mr. Vires speaking on behalf of the SMA, and Mr. Karimov speaking on behalf of the MMA, all of which were in support of this item. The S&T made no additional changes to these items and agreed with the voting status. This item was adopted at the 2019 NCWM Annual Meeting.

Regional Association Comments:
At the WWMA 2018 fall Annual Meeting, Mrs. Tina Butcher (NIST OWM), submitter of the item, noted that the proposal was modified based on input from the Measuring Sector last fall and was modified again following the 2018 NCWM Interim Meeting to address comments made at that meeting. OWM believes the item is ready for a vote.

Mr. Keilty commented that the Measuring Sector has not reviewed the current proposal. He also noted his equipment includes internal components, such as a board that could be removed and replaced and questioned how this would apply to his equipment.

Mr. Lou Straub (Fairbanks), speaking on behalf of the SMA, expressed appreciation for the changes in response to the comments; however, SMA has not had the opportunity to review the revised proposal and can't comment on the current version. He will take the revised proposal to their next meeting and ask for input.

In response to Mr. Keilty's comment, Mrs. Butcher commented the proposal is not intended to address the fact that all devices have parts that can be disassembled and replaced. This proposal specifically applies to devices that are designed to be configured with removable media, such as memory cards, flash drives, or other media. She agreed the Measuring Sector has not seen the current proposal. The item has been included on the Sector's agenda next week under the "as time allows" section to provide the Sector the opportunity to review it, and its input is welcome.

The WWMA recommended the item be designated as a Voting item.

At the NEWMA 2018 fall Interim Meeting, Mr. Mike Sikula (New York) reported during NEWMA's open hearing that, in this day and age, a printer and a printed paper copy should not be a requirement and should be removed (page 14 G.S.8.2). Mr. Sikula also reported there is duplication of this from general code to other codes that he believes is redundant. During the Committee's work session, members of the Committee discussed the comment received and, while they believe printers will eventually be phased out of many transactions, that time has not quite arrived. NEWMA recommends this item be designated a Voting status on the NCWM S&T Committee agenda.

At the NEWMA 2019 spring Annual Meeting, Mr. Vires, speaking on behalf of the SMA, stated that the SMA supports the item and thanked the Committee for addressing their concerns. Mr. Sikula commented that people don't want paper receipts and paperless is the future. New York still supports the block but wants paperless to be on the radar. Mr. Randy Moses (Wayne Fueling Systems) supports New York comments. Mr. Walt Remmert (Pennsylvania) supports New York comments. An audit trail is still created and should be available electronically. Mr. Harshman pointed out that the proposal also provides the option for electronic receipts in addition to a printed receipt. Mr. Moses shared that customers who want receipts will eventually be forced to go inside rather than receive them at the pump. Mr. John Barton (NIST OWM) commented this item originated from the Grain Analyzer Sector where, for those types of devices, it is important to keep track of the often-updated calibrations. Mr. Sikula reported he does not believe inspectors will use the paper audit trails. He agreed the information is important, but it needs a different method to be obtained. Mr. Jim McEnerny (Connecticut) commented that scales have an electronic feature to record and log events and that he can already access. Mr. Harshman commented he believes printed tickets may be easier to use for an audit trail than other electronic methods, explaining that looking at the screen of a phone provides a relatively small viewable display.

Mr. Moses commented that if it is on a printed ticket it will be the narrow width of receipt paper, so a spreadsheet on a tablet or other device could be much easier to use. The Committee recognizes opposition of a printed copy and recommends this as a Voting item on the NCWM S&T Committee agenda, while keeping in mind concerns for the future.

This publication is available free of charge from: https://doi.org/10.6028/NIST.SP.1253

At the SWMA 2018 fall Annual Meeting, the SMA looks forward to the work being done on this item. NIST OWM provided clarification of the intent of the proposal. The submitter believes that the item is fully developed. The SWMA believes there is no additional work that needs to be done on this item. They do note that in their agenda that Item MDM-1 should have been included in B3 rather than B4.

At the CWMA 2018 fall Interim Meeting, no comments were heard during the Committee's open hearings. The CWMA feels this item is fully developed and ready for Voting.

At the CWMA 2018 spring Annual Meeting, Mr. Vires speaking on behalf of the SMA, commented in support of the item. Ms. Diane Lee (NIST OWM) commented that the item is fully developed. The CWMA agreed and recommended it be presented as a Voting item at the 2019 NCWM Annual Meeting.

Additional letters, presentations, and data may have been part of the Committee's consideration and were posted on the NCWM website during the time this item was on the Committee's agenda. To the extent possible, comments and positions from such documents have been summarized in the Committee's report along with comments heard during the Committee's hearings.

BLOCK 4 ITEMS (B4) AUTOMATIC TIMEOUT SPECIFICATIONS

(This item was Adopted.)

B4: MFM-3	V	S.2.9. Automatic Timeout – Pay-At-Retail Motor-Fuel Devices.
B4: HGM-4	V	S.2.8. Automatic Timeout – Pay-At-Vehicle Fuel Dispensers.
B4: EVF-2	V	S.2.8. Automatic Timeout – Pay-At-EVSE.

Source:
NIST OWM (2019)

Purpose:
Prevent the facilitation of fraud on a vehicle fueling system equipped with the capability for authorization of a transaction by a credit card, debit card, or cash.

B4: MFM-3 V S.2.9. Automatic Timeout – Pay-At-Retail Motor-Fuel Devices.

Item Under Consideration:
Amend NIST Handbook 44 Mass Flow Meter Code as follows:

S.2.9. Automatic Timeout – Pay-At-Retail Motor-Fuel Devices. – Once a retail motor-fuel device has been authorized, it must de-authorize within two minutes if not activated. Re-authorization of the retail motor-fuel device must be performed before product is delivered. If the time limit to de-authorize the retail motor-fuel device is programmable, it shall not accept an entry greater than two minutes.

[Nonretroactive as of January 1, 2020]

(Added 2019)

B4: HGM-4 V S.2.8. Automatic Timeout – Pay-At-Vehicle Fuel Dispensers.

Item Under Consideration:
Amend NIST Handbook 44 Hydrogen Gas-Measuring Devices Code as follows:

S.2.8. Automatic Timeout – Pay-At-Vehicle Fuel Dispensers. – Once a vehicle fuel dispenser has been authorized, it must de-authorize within two minutes if not activated. Re-authorization of the vehicle fuel

This publication is available free of charge from: https://doi.org/10.6028/NIST.SP.1253

dispenser must be performed before any product is delivered. If the time limit to de-authorize the vehicle fuel dispenser is programmable, it shall not accept an entry greater than two minutes.
[Nonretroactive as of January 1, 2020]
(Added 2019)

B4: EVF-2 V S.2.8. Automatic Timeout – Pay-At-EVSE.

Item Under Consideration:
Amend NIST Handbook 44 Electric Vehicle Fueling Systems Tentative Code as follows:

S.2.8. Automatic Timeout – Pay-At-EVSE. − Once an EVSE has been authorized, it must de-authorize within two minutes if not activated. Re-authorization of the EVSE must be performed before any electrical energy is delivered and/or timing charges assessed. If the time limit to de-authorize the EVSE is programmable, it shall not accept an entry greater than two minutes.
[Nonretroactive as of January 1, 2020]
(Added 2019)

Background/Discussion:
There has been concern expressed about the proper operation of fueling systems when customers use payment cards (e.g., credit and debit) to purchase fuel and the potential for accidental or intentional fraud created by the use of this payment feature. General Code paragraph G-S.2. Facilitation of Fraud can be applied to the use of these features; however, this proposal provides more specific guidance to manufacturers, regulatory officials, and users about how this transaction feature must operate.

The proposed paragraph draws on interpretations and procedures used in NTEP evaluations and laid out in the NCWM Publication 14 checklists and test procedures. Although device specific design requirements for this feature are not part of NIST Handbook 44 Sections: 3.37 Mass Flow Meters Code; 3.39 Hydrogen Gas-Measuring Devices – Tentative Code; and 3.40 Electric Vehicle Fueling Systems – Tentative Code, NTEP has evaluated this feature based on interpretations of General Code, paragraph G-S.2. Facilitation of Fraud for a number of years. Although this proposal is for a nonretroactive requirement with a January 1, 2020 enforcement date; General Code paragraph G-S.2 will continue to apply to all devices, and the proposed new device specific code paragraphs will more clearly spell out options for avoiding fraudulent use of the card authorization feature for devices manufactured after the effective date.

This proposal will also align language in Sections 3.37, 3.39, and 3.40 with a time-out feature requirement that was added to the NIST HB 44 Section 3.30 Liquid-Measuring Devices Code in 2016. A similar requirement is also included in the Vehicle-Tank Meters Code that requires an automatic end to a transaction after a specified period of inactivity (no product flow) during individual deliveries.

Other communication devices, such as cell phones, may be available for activation of the transaction that were not included in the proposal. This proposal is intended to more thoroughly address any card and cash activated fueling systems since this feature is already in the marketplace. The community may need additional time to assess the capabilities and operation of other technologies being used for transaction activation to ensure a full understanding of its operation and to be able to arrive at a strategy to address these next generation device features.

During the 2019 NCWM Interim Meeting, the Committee heard comments from Mr. Michael Keilty (Endress + Hauser Flowtec AG USA). Mr. Keilty commented that the proposed changes harmonize the language with current NCWM NTEP Publication 14 language, and he supports the item as written. No other comments were received from the floor.

NIST OWM provided the following comments to the Committee in advance of the 2019 Interim Meeting:

- As the submitter of this proposal, OWM intends to address the possible fraudulent use of commercial measuring devices by recommending the changes proposed. This proposal addresses the problem specifically as it relates to dispensers for vehicle refueling. OWM has recognized a potential risk for fraud when these

This publication is available free of charge from: https://doi.org/10.6028/NIST.SP.1253

This publication is available free of charge from: https://doi.org/10.6028/NIST.SP.1253

dispensers are authorized using electronic payment means such as credit or debit cards. The risk is if the dispenser is not activated following its authorization, the device remains available for use indefinitely unless it is de-authorized. OWM believes there is a potential for the owner of the credit/debit card used to authorize the dispenser to become distracted or to be delayed in activating the dispenser for a period of time that would allow another person to use the dispenser.

- The proposed addition of new specification requirements in Sections 3.37, 3.39, and 3.40. in NIST Handbook 44 will require a "time-out" of the devices if not activated within two-minutes after authorization. OWM believes this limit will provide the operator enough time to access the controls on the dispenser, make any selections available, and to activate the dispenser before the "time-out" would occur. This limit of two-minutes would also serve to reduce the amount of time presenting an opportunity for fraudulent use of the dispenser. OWM believes by requiring a time limit for the period of time permitted after a dispenser is authorized and until it is activated (by dispensing product), the risk for fraud will be mitigated.
- OWM notes that a change was adopted in 2016 that required a "time-out" feature in the Handbook 44 LMD Code and that this proposal, if adopted will align the Mass Flow Meters Code, the Hydrogen Gas-Measuring Devices Code, and the Electric Vehicle Fueling Systems Code with the LMD Code. OWM also notes that this proposal will align NIST Handbook 44 requirements with practices that NTEP evaluators have been following for a number of years.
- While these changes are proposed as nonretroactive requirements which would have an effective date of January 1, 2020, the General Code requirement in paragraph G-S.2. will serve regulatory officials in the prevention of fraudulent use in the interim period.

Based on the comments heard during the open hearings from Mr. Keilty and those provided in writing, the Committee assigned a Voting status to all Block 4 Items.

During the 2019 NCWM Annual Meeting, Mrs. Tina Butcher (NIST OWM) stated that these requirements should also apply to retail-motor fuel systems in the LPG and Anhydrous Ammonia Liquid Measuring Devices Code. Mr. Dmitri Karimov (Liquid Controls) speaking on behalf of MMA, stated that there are inconsistencies with the time stated for time-out between codes which should be addressed. Mr. Kevin Schnepp (California) supported the item.

NIST OWM: reported that they agreed with the WWMA's findings that retail motor-fuel dispensing systems that fall under NIST HB 44 Section 3.32 LPG and Anhydrous Ammonia Liquid-Measuring Devices Code should also be subject to similar requirements as corresponding other vehicle fueling systems in Sections 3.30, 3.37, 3.39, and 3.40. to ensure customers' credit and debit cards do not remain authorized indefinitely. Consequently, OWM supports the WWMA recommendation to include a proposed new Automatic Timeout – Pay-At-Pump Retail Motor-Fuel Devices requirement in Section 3.32. Since the Committee did not modify the proposal at the 2019 NCWM Interim Meeting to include the WWMA's recommended LPG timeout application, OWM recommended the Committee consider the LPG timeout feature as a new item for a vote in 2020. OWM also suggested alternative language for a timeout requirement that addresses stationary, vehicle mounted, and retail motor-fuel LPG devices as follows:

S.2.6. ***Automatic Timeout.***

S.2.6.1. Stationary (Other than Stationary Retail Motor-Fuel Dispensers) and Vehicle-Mounted Meters, Electronic. – For individual deliveries, if there is no product flow for three minutes the transaction must be completed before additional product flow is allowed. The 3-minute timeout shall be a sealable feature on of an indicator.
[Nonretroactive as of 2021]

(Added 2020)

S.2.6.2. Automatic Timeout – Pay-At-Pump Retail Motor-Fuel Devices. – Once a device has been authorized, it must de-authorize within two minutes if not activated. Re-authorization of the device must be performed before any product can be dispensed. If the time limit to de-authorize the device is programmable, it shall not accept an entry greater than two minutes.
[Nonretroactive as of January 1, 2021]

(Added 2020)

Regional Association Comments:
At the WWMA 2018 fall Annual Meeting, Mrs. Butcher explained that this series of proposals are intended to align the codes referenced in this block with a corresponding requirement added to the Liquid Measuring Devices Code in 2016. The proposal helps ensure a consumer's credit card does not remain activated for an indefinite period of time should the system not be used to deliver product. In reviewing this proposal prior to the WWMA meeting, OWM noticed that the LPG and Anhydrous Ammonia Liquid-Measuring Devices Code is also lacking a corresponding requirement. Should the WWMA be amenable to forwarding this block of items, she suggested that the proposal include a recommendation to add a corresponding requirement to the LPG Code.

The WWMA heard no comments in opposition to the item and acknowledged this block of items will serve to align the measuring codes as they apply to retail motor-fuel applications. The WWMA agreed that retail motor-fuel dispensing systems that fall under the LPG and Anhydrous Ammonia Liquid-Measuring Devices Code should be subject to similar requirements to ensure consumers' cards do not remain authorized indefinitely. Consequently, the WWMA recommends the following proposed paragraph be included in the block of items recommending a change to the LPG and Anhydrous Ammonia Liquid-Measuring Devices Code:

S.1.5.8. Automatic Timeout – Pay-At-Pump Retail Motor-Fuel Devices. – Once a device has been authorized, it must de-authorize within two minutes if not activated. Re-authorization of the device must be performed before any product can be dispensed. If the time limit to de-authorize the device is programmable, it shall not accept an entry greater than two minutes.
[Nonretroactive as of January 1, 20XX]

(Added 2016)

With this additional paragraph, the WWMA recommends this block of items be designated as a Voting item.

At the NEWMA 2018 fall Interim Meeting, Mr. Mike Sikula (New York) reported during the Committee's open hearings, he would like to make sure this code makes consideration for people with disabilities. Two minutes may not be enough time for a disabled person. During the work session, NEWMA determined that by the time a person had exited the vehicle and swiped their card, this amount of time was sufficient to both: a) allow them to select a grade and remove the nozzle; or b) to change their mind and leave without so much time left that another person could fraudulently use the card had it not been canceled. NEWMA recommended this as a Voting item on the NCWM S&T Committee agenda.

At the NEWM 2019 spring Annual Meeting, Mr. Jim McEnerny (Connecticut) voiced support of this item. The NEWMA recommended this as a Voting item on the NCWM S&T Committee agenda.

At the SWMA 2018 fall Annual Meeting, NIST OWM commented that this paragraph was added into the LMD code in 2016. The submitter believes this item should be added to the LPG code and that the item was fully developed and would request that it be sent forward as a Voting item. The SWMA agreed the item is fully developed and recommended it be forward as a Voting item.

At the CWMA 2018 fall Interim Meeting, Mr. Charles Stutesman (Kansas) reported that his understanding of the item is to make the codes in this block uniform with the LMD code, but he questions the length of the time limit and the effect it may have on elderly and physically challenged. Mr. Keilty reported the original proposal was three minutes, but the NCWM adopted two minutes. CWMA recommended this item move forward as Voting.

At the CWMA 2019 spring Annual Meeting, Mr. Stutesman expressed concern regarding the limited amount of time before deactivation of the device.

This publication is available free of charge from: https://doi.org/10.6028/NIST.SP.1253

At the 2019 NCWM Annual Meeting, the Committee heard supporting views for adding the automatic timeout feature to the NIST HB 44 Mass Flow Meters, Hydrogen Gas Measuring Devices, and Electric Vehicle Fueling Systems Codes. It was pointed out that a similar requirement is also needed for the LPG Code, but that device code is not addressed within this proposal. The Committee received comments supporting this item for vote and also that it is not critical to include an automatic timeout requirement in the LPG code at this time. Addressing this issue in the LPG Code could be accomplished during the next NCWM voting cycle (2020).

In consideration of the comments received, the Committee agreed to present the item for a vote.

Additional letters, presentations, and data may have been part of the Committee's consideration and were posted on the NCWM website during the time this item was on the Committee's agenda. To the extent possible, comments and positions from such documents have been summarized in the Committee's report along with comments heard during the Committee's hearings.

BLOCK 5 ITEMS (B5) REPEATABILITY TESTS AND TOLERANCES

(This item was Adopted.)

(Note: This item appeared as LPG-5 in the 2018 NCWM Publication 16. It was expanded by the developer for 2019 to uniformly address the same issue across multiple Section 3 codes.)

B5: LMD-2	V	N.4.1.2. Repeatability Tests; N.4.6. Repeatability Tests; and T.3. Repeatability.
B5: VTM-3	V	N.4.1.2. Repeatability Tests; N.4.7. Repeatability Tests; and T.3. Repeatability.
B5: LPG-4	V	N.4.1.2. Repeatability Tests; N.4.4. Repeatability Tests; and T.3. Repeatability.
B5: HGV-2	V	N.4.1.2. Repeatability Tests; N.4.3. Repeatability Tests; and T.2. Repeatability.
B5: CLM-3	V	N.5.1.1. Repeatability Tests; N.5.3. Repeatability Tests; and T.4. Repeatability.
B5: MLK-2	V	N.4.1.1. Repeatability Tests; N.4.4. Repeatability Tests; and T.3. Repeatability.
B5: WTR-2	V	N.4.1.1. Repeatability Tests and N.4.4. Repeatability Tests.
B5: MFM-6	V	N.6.1.1. Repeatability Tests; N.6.3. Repeatability Tests; and T.3. Repeatability.
B5: CDL-4	V	N.4.1.1. Repeatability Tests; N.4.5. Repeatability Tests; and T.2.1. Repeatability.
B5: HGM-5	V	N.6.1.1. Repeatability Tests; N.6.2. Repeatability Tests; and T.3. Repeatability.

Source:
Ross Andersen, Retired (2017)

Purpose:
Address differences between NIST Handbook 44 and NCWM Publication 14 practices for repeatability testing.

B5: LMD-2 V N.4.1.2. Repeatability Tests; N.4.6. Repeatability Tests; and T.3. Repeatability.

Item Under Consideration:
Amend NIST Handbook 44 Liquid Measuring Devices Code as follows.

Delete existing paragraph N.4.1.2. Repeatability Tests:

> ~~**N.4.1.2. Repeatability Tests. Tests for repeatability should include a minimum of three consecutive test drafts of approximately the same size and be conducted under controlled conditions where variations in factors such as temperature, pressure, and flow rate are reduced to the extent that they will not affect the results obtained.**~~
>
> ~~**(Added 2001)**~~

Add a new paragraph N.4.6. Repeatability Tests:

This publication is available free of charge from: https://doi.org/10.6028/NIST.SP.1253

This publication is available free of charge from: https://doi.org/10.6028/NIST.SP.1253

N.4.6. Repeatability Tests. – Tests for repeatability should include a minimum of three consecutive test drafts of approximately the same size and be conducted under controlled conditions where variations in factors such as temperature, pressure, and flow rate are reduced to the extent that they will not affect the results obtained. When conducting the tests, the flow rates shall be within the minimum and maximum discharge rates as marked by the manufacturer. For devices with no marked minimum and maximum flow rates, the minimum discharge rates shall be as specified in N.4.2.1. or N.4.2.2. and the maximum discharge rates shall be the maximum discharge rate developed under the conditions of the installation. For devices equipped with an automatic temperature compensator, the results shall be based on uncompensated (gross) volume, e.g. with the temperature compensator deactivated.

(Added 2019)

Modify Paragraph T.3. Repeatability as follows to reference the new "Notes" paragraph:

T.3. Repeatability. – When multiple tests are conducted at approximately the same flow rate and draft size, the range of the test results for the flow rate shall not exceed 40 % of the absolute value of the maintenance tolerance and the results of each test shall be within the applicable tolerance. This tolerance does not apply to the test of the automatic temperature-compensating system. (Also see ~~**N.4.1.2.**~~ **N.4.6.** Repeatability Tests.)

(Added 1992) (Amended 2001, ~~**and**~~ 2002, **and 2019)**

B5: VTM-3 V N.4.1.2. Repeatability Tests; N.4.7. Repeatability Tests; and T.3. Repeatability.

Item Under Consideration:
Amend NIST Handbook 44 Vehicle-Tank Meters Code as follows.

Delete existing paragraph N.4.1.2. Repeatability Tests:

~~**N.4.1.2. Repeatability Tests. – Tests for repeatability should include a minimum of three consecutive test drafts of approximately the same size and be conducted under controlled conditions where variations in factors such as temperature, pressure, and flow rate are reduced to the extent that they will not affect the results obtained**~~

~~**(Added 2001)**~~

Add a new paragraph N.4.7. Repeatability Tests:

N.4.7. Repeatability Tests. – Tests for repeatability should include a minimum of three consecutive test drafts of approximately the same size and be conducted under controlled conditions where variations in factors such as temperature, pressure, and flow rate are reduced to the extent that they will not affect the results obtained. When conducting the tests, the flow rates shall be within the minimum and maximum discharge rates as marked by the manufacturer. For devices equipped with an automatic temperature compensator, the results shall be based on uncompensated (gross) volume, e.g. with the temperature compensator deactivated.

(Renumbered and Amended 2019)

Modify Paragraph T.3. Repeatability as follows to reference the new "Notes" paragraph:

T.3. Repeatability. – When multiple tests are conducted at approximately the same flow rate and draft size, the range of the test results for the flow rate shall not exceed 40 % of the absolute value of the maintenance tolerance and the results of each test shall be within the applicable tolerance. (Also see ~~**N.4.1.2.**~~ **N.4.7.** Repeatability Tests.)

(Added 1992) (Amended 2001, ~~**and**~~ 2002, **and 2019)**

This publication is available free of charge from: https://doi.org/10.6028/NIST.SP.1253

B5: LPG-4 V N.4.1.2. Repeatability Tests; N.4.4. Repeatability Tests; and T.3. Repeatability.

Item Under Consideration:
Amend NIST Handbook 44 Liquefied Petroleum Gas and Anhydrous Ammonia Liquid-Measuring Devices Code as follows.

Delete existing paragraph N.4.1.2. Repeatability Tests:

> ~~**N.4.1.2. Repeatability Tests. – Tests for repeatability should include a minimum of three consecutive test drafts of approximately the same size and be conducted under controlled conditions where variations in factors such as temperature, pressure, and flow rate are reduced to the extent that they will not affect the results obtained.**~~
>
> ~~**(Added 2001)**~~

Add a new paragraph N.4.4. Repeatability Tests:

> **N.4.4. Repeatability Tests. – Tests for repeatability should include a minimum of three consecutive test drafts of approximately the same size and be conducted under controlled conditions where variations in factors such as temperature, pressure, and flow rate are reduced to the extent that they will not affect the results obtained. When conducting the tests, the discharge rates shall be within the minimum and maximum discharge rates as marked by the manufacturer. For devices equipped with an automatic temperature compensator, results shall be based on the uncompensated (gross) volume, e.g. with the temperature compensator deactivated.**
>
> **(Renumbered and Amended 2019)**

Modify Paragraph T.3. Repeatability as follows to reference the new "Notes" paragraph:

> **T.3. Repeatability.** – When multiple tests are conducted at approximately the same flow rate and draft size, the range of the test results for the flow rate shall not exceed 40 % of the absolute value of the maintenance tolerance and the results of each test shall be within applicable tolerance. ~~**This tolerance does not apply to the test of the automatic temperature-compensating system.**~~ (Also **see** ~~**N.4.1.2.**~~ **N.4.4.** Repeatability Tests.)
>
> (Added 1992) (Amended 2001, ~~**and**~~ 2002, **and 2019)**

B5: HGV-2 V N.4.1.2. Repeatability Tests; N.4.3. Repeatability Tests; and T.2. Repeatability.

Item Under Consideration:
Amend NIST Handbook 44 Hydrocarbon Gas Vapor-Measuring Devices Code as follows.

Delete existing paragraph N.4.1.2. Repeatability Tests:

> ~~**N.4.1.2. Repeatability Tests. – Tests for repeatability should include a minimum of three consecutive test drafts of approximately the same size and be conducted under controlled conditions where variations in factors such as temperature, pressure, and flow rate are reduced to the extent that they will not affect the results obtained.**~~
>
> ~~**(Added 2002)**~~
>
> ~~***Note: the repeatability test will not be performed at the low-flame flow rate for these devices as the time required would be unrealistic.***~~

Add a new paragraph N.4.3. Repeatability Tests:

> **N.4.3. Repeatability Tests. – Tests for repeatability should include a minimum of three consecutive test drafts of approximately the same size and be conducted under controlled conditions where variations in**

factors such as temperature, pressure, and flow rate are reduced to the extent that they will not affect the results obtained. When conducting the tests, the minimum discharge rate shall be at least 20% of the marked capacity rate or the minimum flow rate marked on the device, whichever is less, and the maximum discharge rates shall not exceed the capacity rate as marked by the manufacturer.

(Renumbered and Amended 2019)

Note: the repeatability test will not be performed at the low-flame flow rate for these devices as the time required would be unrealistic.

Modify Paragraph T.3. Repeatability as follows to reference the new "Notes" paragraph:

T.2. Repeatability. – When multiple tests are conducted at approximately the same flow rate and draft size, the range of the test results for the flow rate shall not exceed 0.9 % and the results of each test shall be within the applicable tolerance. (Also see ~~**N.4.1.2.**~~ **N.4.3.** Repeatability Test.)

(Added 2002) **(Amended 2019)**

B5: CLM-3 V N.5.1.1. Repeatability Tests; N.5.3. Repeatability Tests; and T.4. Repeatability.

Item Under Consideration:
Amend NIST Handbook 44 Cryogenic Liquid-Measuring Devices Code as follows.

Delete existing paragraph N.5.1.1. Repeatability Tests:

~~**N.5.1.1. Repeatability Tests. – Tests for repeatability should include a minimum of three consecutive test drafts of approximately the same size and be conducted under controlled conditions where variations in factors such as temperature, pressure, and flow rate are reduced to the extent that they will not affect the results obtained.**~~

~~**(Added 2001)**~~

Add a new paragraph N.5.3. Repeatability Tests:

N.5.3. Repeatability Tests. – Tests for repeatability should include a minimum of three consecutive test drafts of approximately the same size and be conducted under controlled conditions where variations in factors such as temperature, pressure, and flow rate are reduced to the extent that they will not affect the results obtained. When conducting the tests, the discharge rates shall be within the minimum and maximum discharge rates as marked by the manufacturer. For devices equipped with an automatic temperature or density compensator, results shall be based on either: (1) all runs conducted with the compensated (net) volume (e.g., with the temperature or density compensator activated); or (2) all runs conducted with the uncompensated (gross) volume (e.g. with the temperature or density compensator deactivated).

(Renumbered and Amended 2019)

Modify Paragraph T.3. Repeatability as follows to reference the new "Notes" paragraph:

T.4. Repeatability. – When multiple tests are conducted at approximately the same flow rate and draft size, the range of the test results for the flow rate shall not exceed 40 % of the absolute value of the maintenance tolerance and the results of each test shall be within the applicable tolerance. Also see ~~**N.5.1.1.**~~ **N.5.3.** Repeatability Tests.

(Added 2001) **(Amended 2019)**

This publication is available free of charge from: https://doi.org/10.6028/NIST.SP.1253

This publication is available free of charge from: https://doi.org/10.6028/NIST.SP.1253

B5: MLK-2 V N.4.1.1. Repeatability Tests; N.4.4. Repeatability Tests; and T.3. Repeatability.

Item Under Consideration:
Amend NIST Handbook 44 Milk Meters Code as follows.

Delete existing paragraph N.4.1.1. Repeatability Tests:

> ~~**N.4.1.1. Repeatability Tests. – Tests for repeatability should include a minimum of three consecutive test drafts of approximately the same size and be conducted under controlled conditions where variations in factors such as temperature, pressure, and flow rate are reduced to the extent that they will not affect the results obtained.**~~
> ~~**(Added 2002)**~~

Add a new paragraph N.4.4. Repeatability Tests:

> **N.4.4. Repeatability Tests. – Tests for repeatability should include a minimum of three consecutive test drafts of approximately the same size and be conducted under controlled conditions where variations in factors such as temperature, pressure, and flow rate are reduced to the extent that they will not affect the results obtained. When conducting the tests, the discharge rates shall be within the minimum and maximum discharge rates as marked by the manufacturer.**
> **(Renumbered and Amended 2019)**

Modify Paragraph T.3. Repeatability as follows to reference the new "Notes" paragraph:

> **T.3. Repeatability.** – When multiple tests are conducted at approximately the same flow rate and draft size, the range of the test results for the flow rate shall not exceed 40 % of the absolute value of the maintenance tolerance and the results of each test shall be within the applicable tolerance. (Also see ~~**N.4.1.1.**~~ **N.4.4.** Repeatability Tests.) (Added 2002) **(Amended 2019)**

B5: WTR-2 V N.4.1.1. Repeatability Tests and N.4.4. Repeatability Tests.

Item Under Consideration:
Amend NIST Handbook 44 Water Meters Code as follows.

Delete existing paragraph N.4.1.1. Repeatability Tests:

> ~~**N.4.1.1. Repeatability Tests. – Tests for repeatability should include a minimum of three consecutive test drafts of approximately the same size and be conducted under controlled conditions where variations in factors such as temperature, pressure, and flow rate are reduced to the extent that they will not affect the results obtained.**~~
> ~~**(Added 2002)**~~

Add a new paragraph N.4.4. Repeatability Tests:

> **N.4.4. Repeatability Tests. – Tests for repeatability should include a minimum of three consecutive test drafts of approximately the same size and be conducted under controlled conditions where variations in factors such as temperature, pressure, and flow rate are reduced to the extent that they will not affect the results obtained. When conducting the tests, the minimum flow rate shall be at least the minimum rate specified in Table N.4.2.a., and the maximum discharge rates shall not exceed the maximum discharge rate developed under the conditions of the installation.**
> **(Renumbered and Amended 2019)**

This publication is available free of charge from: https://doi.org/10.6028/NIST.SP.1253

B5: MFM-6 V N.6.1.1. Repeatability Tests; N.6.3. Repeatability Tests; and T.3. Repeatability.

Item Under Consideration:
Amend NIST Handbook 44 Mass Flow Meters Code as follows.

Delete existing paragraph N.6.1.1. Repeatability Tests:

> ~~**N.6.1.1. Repeatability Tests. – Tests for repeatability should include a minimum of three consecutive test drafts of approximately the same size and be conducted under controlled conditions where variations in factors such as temperature, pressure, and flow rate are reduced to the extent that they will not affect the results obtained.**~~
> ~~**(Added 2001)**~~

Add a new paragraph N.6.3. Repeatability Tests:

> **N.6.3. Repeatability Tests. – Tests for repeatability should include a minimum of three consecutive test drafts of approximately the same size and be conducted under controlled conditions where variations in factors such as temperature, pressure, and flow rate are reduced to the extent that they will not affect the results obtained. When conducting the tests, the discharge rates shall be within the minimum and maximum discharge rates as marked by the manufacturer.**
> **(Renumbered and Amended2019)**

Modify Paragraph T.3. Repeatability as follows to reference the new "Notes" paragraph:

> **T.3. Repeatability.** – When multiple tests are conducted at approximately the same flow rate and draft size, the range of the test results for the flow rate shall not exceed 40 % of the absolute value of the maintenance tolerance and the results of each test shall be within the applicable tolerance. (Also see ~~**N.6.1.1.**~~ **N.6.3.** Repeatability Tests.)
> (Amended 1992, 1994, ~~**and**~~ 2001**, and 2019)**

B5: CDL-4 V N.4.1.1. Repeatability Tests; N.4.5. Repeatability Tests; and T.2.1. Repeatability.

Item Under Consideration:
Amend NIST Handbook 44 Carbon Dioxide Liquid-Measuring Code as follows.

Delete existing paragraph N.4.1.1. Repeatability Tests:

> ~~**N.4.1.1. Repeatability Tests. – Tests for repeatability should include a minimum of three consecutive test drafts of approximately the same size and be conducted under controlled conditions where variations in factors such as temperature, pressure, and flow rate are reduced to the extent that they will not affect the results obtained.**~~
> ~~**(Added 2002)**~~

Add a new paragraph N.4.5. Repeatability Tests:

> **N.4.5. Repeatability Tests. – Tests for repeatability should include a minimum of three consecutive test drafts of approximately the same size and be conducted under controlled conditions where variations in factors such as temperature, pressure, and flow rate are reduced to the extent that they will not affect the results obtained. When conducting the tests, the discharge rates shall be within the minimum and maximum discharge rates as marked by the manufacturer. For devices equipped with an automatic temperature or density compensator, results shall be based on either: (1) all runs conducted with the compensated (net) volume (e.g., with the temperature or density compensator activated); or (2) all runs**

This publication is available free of charge from: https://doi.org/10.6028/NIST.SP.1253

conducted with the uncompensated (gross) volume (e.g. with the temperature or density compensator deactivated).

(Renumbered and Amended 2019)

Modify Paragraph T.2.1. Repeatability as follows to reference the new "Notes" paragraph:

T.2.1. Repeatability. – When multiple tests are conducted at approximately the same flow rate and draft size, the range of the test results for the flow rate shall not exceed 40 % of the absolute value of the maintenance tolerance and the results of each test shall be within the applicable tolerance. (Also see ~~**N.4.1.1.**~~ **N.4.5.** Repeatability Tests.)

(Added 2002) **(Amended 2019)**

B5: HGM-5 V N.6.1.1. Repeatability Tests; N.6.2. Repeatability Tests; and T.3. Repeatability.

Item Under Consideration:
Amend NIST Handbook 44 Hydrogen Gas-Metering Devices Code as follows:

Delete existing paragraph N.6.1.1. Repeatability Tests:

~~**N.6.1.1. Repeatability Tests. – Tests for repeatability should include a minimum of three consecutive test drafts of approximately the same size and be conducted under controlled conditions where variations in factors.**~~

Add a new paragraph N.6.2. Repeatability Tests:

N.6.2. Repeatability Tests. – Tests for repeatability should include a minimum of three consecutive test drafts of approximately the same size and be conducted under controlled conditions where variations in factors are reduced to minimize the effect on the results obtained. When conducting the tests, the discharge rates shall be within the minimum and maximum discharge rates as marked by the manufacturer.

(Renumbered and Amended 2019)

Modify Paragraph T.3. Repeatability as follows to reference the new "Notes" paragraph:

T.3. Repeatability. – When multiple tests are conducted at approximately the same flow rate and draft size, the range of the test results for the flow rate shall not exceed 40 % of the absolute value of the maintenance tolerance and the results of each test shall be within the applicable tolerance. (Also see ~~**N.6.1.1.**~~ **N.6.2.** Repeatability Tests.) (Amended 2019)

Background/Discussion:
Note: This item appeared as LPG-5 in the 2018 NCWM Publication 16. It was expanded in 2019 as shown in the Item Under Consideration to uniformly address the same issues across multiple Section 3 Codes.

The original proposed changes for this item were an attempt to clarify and maintain the status quo as the code is presently written. It was submitted in 2017 to amend the LPG and Anhydrous Ammonia Code as follows:

Add additional text to HB 44 LPG and Anhydrous Ammonia LMD Code paragraph N.4.1.2. as follows:

N.4.1.2. Repeatability Tests. – Tests for repeatability should include a minimum of three consecutive test drafts of approximately the same size and be conducted under controlled conditions where variations in factors such as temperature, pressure, and flow rate are reduced to the extent that they will not affect the results obtained. **Repeatability tests shall be based on the uncompensated volume, e.g. with the temperature compensator**

This publication is available free of charge from: https://doi.org/10.6028/NIST.SP.1253

deactivated. Both field tests and type evaluation tests shall be run at flow rates consistent with normal tests as specified in N.4.1.

(Amended 20XX)

Add a new paragraph N.4.2.4. to the LPG and Anhydrous Ammonia LMD Code as follows:

N.4.2.4. Repeatability Tests for Type Evaluation. – Tests for repeatability should include a minimum of three consecutive test drafts of approximately the same size and be conducted under controlled conditions where variations in factors such as temperature, pressure, and flow rate are reduced to the extent that they will not affect the results obtained. Repeatability tests shall be based on the uncompensated volume, e.g. with the temperature compensator deactivated. Type evaluation tests shall be run at flow rates consistent with special tests as specified in N.4.2., N.4.2.1., N.4.2.2., or N.4.2.3. as appropriate.

(Added 20XX)

The proposal is aimed to correct a number of areas of confusion. First, the inclusion of repeatability in the N.4.1. series indicates that repeatability is to be run at normal flow rates. There was some confusion if this was the actual intent when these sections were added to NIST HB 44 in multiple codes? Running the tests only at Normal flow rates is consistently how the test was typically performed in the field. The amendment to N.4.1.2. was to clarify this explicitly for field tests and type evaluation tests.

The new paragraph was added because NTEP has required repeatability on tests over the entire range of flow rates conducted under controlled conditions during type evaluation testing. This means anywhere between rated maximum and minimum flow rates. The proposed code addition would have formalized and legitimized what has been done for a long time.

Another question arose whether gross or net results could be used in repeatability tests. Obviously, you can't compare net to gross, but you can compare three consecutive gross or three consecutive net results. The tolerance paragraph in the LPG Code specifies the tolerance does not apply to the test of the compensator. Also, the practice in NIST HB 44 is to test one variable at a time to the extent possible; the revision clarifies that repeatability is addressed to gross meter performance only. This can be through deactivating the ATC or just using gross values where both gross and net are available from the same test.

In the original proposal (carried as developing item LPG-5 in **2018 L&R Report**), the intent was to address only the LPG and Anhydrous Ammonia LMD Code and preserve the status quo based on what presently appears in the Handbook. It was understood that the decisions on this item would set precedents affecting all LMD codes that contained a repeatability test. After discussion at the 2018 Interim and Annual Meetings with various Meter Manufacturers, OWM, and other interested parties, the original proposal is being amended. The questions being posed have been broadened to include all LMD codes. The issues in this revision can now be expressed through the following questions:

1. Should the repeatability test be conducted net (compensated) or gross (uncompensated)? Or possibly, are both allowed provided all test results are from the same mode of operation?

   Response to Issue 1.

   In developing this item, there were those agreeing with the original proposal to use only gross results and others differing in that either gross or net should be accepted provided all results are from the same mode. The tolerance paragraph in the LPG and Anhydrous Ammonia LMD Code indicates the test does not apply to the test of the ATC system. It can be argued that the ATC system already has a performance requirement in T.4., requiring agreement between net and gross, i.e., compensated and uncompensated results. This tolerance reads much like the T.3. paragraph. Also, NIST HB 44 precedent tends to support performing the tests in gross mode only. That precedent implies that,in testing one component or variable, you attempt to hold all other components or variables constant. The revised proposal retains the limitation of performing the test using gross results (uncompensated).

This publication is available free of charge from: https://doi.org/10.6028/NIST.SP.1253

In those codes where different device applications are sometimes gross and sometimes net, it will be necessary to specify using gross results, if the device has ATC capability. It is proposed to add the following text in the note paragraph specifying the repeatability test: "For devices equipped with an automatic temperature compensator, the test results shall be based on uncompensated (gross) volume, i.e., with the temperature compensator deactivated" (or equivalent wording). In the LPG and Anhydrous Ammonia LMD Code, this change renders the extra wording in T.3. unnecessary, i.e., that the tolerance does not apply to ATC.

2. Should the repeatability test be a normal test as presently presented in the Code? That is, is the test limited to flow rates within the range of normal tests? Note that the repeatability test now appears in the Normal Test section in every affected NIST HB 44 LMD Code, Sections 3.30. through 3.39. The table below shows the history of the related sections.

Code	Note Paragraph	Tolerance Paragraph
3.30. LMD	N.4.1.2. (Added 2001)	T.3. (Added 1992) (Amended 2001 and 2002)
3.31. VTM	N.4.1.2. (Added 2001)	T.3. (Added 1992) (Amended 2001 and 2002)
3.32. LPG/NH4	N.4.1.2. (Added 2001)	T.3. (Added 1992) (Amended 1997 and 2001)
3.33. Vapor	N.4.1.2. (Added 2002)	T.3. (Added 2002)
3.34. Cryogenic	N.5.1. (Added 2001)	T.4. (Added 2001)
3.35. Milk	N.4.1.1. (Added 2002)	T.3. (Added 2002)
3.36. Water	N.4.1.1. (Added 2002)	T.1.1. (Added 2002) (Amended 2010)
3.37. Mass Flow	N.6.1.1. (Added 2001)	T.3. (Amended 1992, 1994, and 2001)
3.38. CO_2	N.4.1.1. (Added 2002)	T.2.1. (Added 2002)
3.39. Hydrogen	N.6.1.1. (Tentative Code 2010)	T.3. (Tentative Code 2010)

Response to Issue 2.

Overwhelming support has emerged for the allowance of repeatability tests being performed at any flow rate within the legitimate operating range of the device. To accomplish this, the Note paragraph on repeatability tests must be removed from the Normal Test section of each Code and placed in place in a section of its own. For example, in 3.30. LMD Code, note N.4.1.2. is proposed to be renumbered N.4.6. This results in the sequence N.4.1. Normal tests, N.4.2. Special Tests, N.4.3. Money-Value Computation Tests, N.4.4. Pour and Drain Times, N.4.5. Temperature Correction on Wholesale Meters, and N.4.6. Repeatability Tests. NIST OWM has suggested inserting it after Special Tests and renumbering N.4.3. to N.4.5. Either way accomplishes the same end. Adding at the end of the list may cause less disruption.

Removing repeatability from the "Special Tests" section now leaves the issue of flow rates for conducting the test unspecified. I suggest we need to add a statement to each Note as follows: "When conducting the tests, the flow rates shall be within the minimum and maximum discharge rates as marked by the manufacturer." However, some codes use different terminology, and in some cases, minimum and maximum discharge rates are not marked like RMFDs. For these cases, I propose to add an additional statement regarding minimum discharge rates and maximum discharge rates as appropriate to that code.

3. If the test may only be performed as a normal test in Issue 2, how do we legitimize the NTEP policy of applying the tolerance to repeatability tests at special test flow rates? Based on the response to Issue 2, this will be a moot issue and can be dropped moving forward.

See the Committee's 2017 and 2018 Final Reports to view comments the Committee received and actions taken by the Committee concerning the original proposal to amend only the LPG and Anhydrous Ammonia LMD Code.

At the 2019 NCWM Interim Meeting, the submitter, Mr. Ross Andersen (New York, retired) submitter of this item, indicated he felt the item was sufficiently developed to proceed to a vote and requested the Committee

This publication is available free of charge from: https://doi.org/10.6028/NIST.SP.1253

change the status of the item to Voting. He further commented that repeatability testing cannot currently be applied to a Special Test (slow flow) as written, and this gap would be addressed by the proposed wording. The new wording removes repeatability requirements from the "Normal Test" requirements and moves it to its own section. With these changes, an official may test at any flow rate between a meter's rated minimum and maximum flow rates. Mr. Andersen further submitted that these tests should only be performed in uncompensated mode; this will remove any external influence from a temperature compensator since these changes do not reflect the repeatability characteristics of the meter.

Mr. Dmitri Karimov, (Liquid Controls) speaking on behalf of the voiced in support of the item: Mr. Karimov reported the MMA believes repeatability tests may be performed at any flow rate in the approved range of the meter. Mr. Karimov indicated he would work with Mr. Andersen to address some minor editorial changes to the text before the 2019 NCWM Annual Meeting.

Ms. Julie Quinn (Minnesota) voiced support for the item and brought up an example where the same meter may be used to deliver gasoline at high flow rates, followed by ethanol at much slower flow rates (sequential blending with a single meter). She emphasized this is normal operation for these meters, and, as such, she wants to be able to test repeatability both at the higher flow rate seen with gasoline deliveries and also at the lower flow rates encountered while delivering ethanol. Mr. Jim Willis (New York) indicated support for this item.

OWM personnel were unable to attend the 2019 NCWM Interim Meeting due to a Federal Government shutdown in early 2019 due to a lack of appropriations; however, OWM provided written comments to the Committee on this item in advance of the meeting. In its written comments, OWM reported it concurs with the need to make modifications to clarify the application of repeatability criteria and believes the proposed changes accomplish this clarification. Systems must be able to provide repeatable measurements under all conditions of use, not just at the normal flow rate and not just during type evaluation. Tests run at reduced flow rates often reveal problems with meter repeatability that may not be observed at normal flow rates. Officials should not be precluded from conducting repeatability tests at any flow rate within the rated flow range of the metering system during routine testing or type evaluation. It is not clear that the current placement of the criteria for repeatability was intended to limit this testing.

OWM believes the technical concerns raised during past discussions of this issue have been resolved with the current version of the proposed language in the Item Under Consideration. However, the proposal needs to be corrected to reflect numbering in the 2019 edition of NIST Handbook 44 as follows:

- Item VTM-3, the renumbering of the paragraph titled "Repeatability Tests" in the item under consideration is recommended to be changed from N.4.6. to N.4.7. The same change is recommended for inclusion in the amendment of T.3. Repeatability listed under that same item.
- Item LPG-4, the renumbering of the paragraph "Repeatability Tests" in the item under consideration is recommended to be changed from N.4.6. to N.4.4. The same change is recommended for inclusion in the amendment of T.3. Repeatability listed under that same item.
- Item HGM-5, OWM notes that the amendment to the numbering in the title of the paragraph (N.6.1.1. changed to N.6.2.) does not reflect N.6.1.1. as being deleted using "strike-through" text.

During its 2019 Interim Meeting work session, Committee members agreed the items in this block are fully developed and recommended the block of items be designated as "Voting" as shown in the Item Under Consideration.

***Technical Advisors' Note**: Following the Interim Meeting, the OWM Technical Advisors, in consultation with the Committee Chair and submitter, made changes to the proposal in the "Item Under Consideration" to: (1) modify the format of how the changes are presented (as recommended by the WWMA at its fall 2018 Annual Meeting); (2) reflect the numbering changes recommended by OWM in its written comments to the Committee; and (3) clarify the application of the repeatability requirements to devices equipped with automatic temperature or density compensators in the LPG and Anhydrous Ammonia Liquid-Measuring Devices Code; the Cryogenic Liquid Measuring Devices Code; and the Carbon Dioxide Liquid-Measuring Devices Code.*

This publication is available free of charge from: https://doi.org/10.6028/NIST.SP.1253

With regard to the changes to address point (3) above, the Technical Advisor and Submitter note that Cryogenic Liquid-Measuring Devices and Carbon Dioxide Liquid-Measuring Devices may also be equipped with automatic temperature or density compensators. Tests of compensating systems for devices covered under the Liquid-Measuring Devices Code, the Vehicle-Tank Meters Code, and the LPG and Anhydrous Ammonia Liquid-Measuring Devices Code consist of comparing the results of a test with the device in the "compensated" mode and a test with the device with the compensator deactivated (or in the uncompensated mode). Tests of compensators on cryogenic and CO2 meters, however, are conducted by comparing the quantity indicated by the device with the compensator activated with the actual delivered quantity corrected to standard conditions. There is no independent agreement requirement in these codes between compensated and uncompensated runs. Repeatability tests for cryogenic and CO2 meters may, therefore, be conducted with the compensator either activated or deactivated; however, all runs to be compared for compliance with repeatability requirements must be conducted with the device in the same operating mode. This also does not preclude a device from being tested for repeatability separately in both modes.

During the 2019 Annual Meeting, Mr. Andersen stated that the MMA had pointed out that in those paragraphs there is an editorial mistake in the use of "i.e." rather than "e.g." in all affected paragraphs. The abbreviation "e.g." should replace "i.e." Mrs. Tina Butcher (NIST OWM) supported the item as Voting. Mr. Karimov supported the item as Voting.

Additional letters, presentations, and data may have been part of the Committee's consideration and were posted on the NCWM website during the time this item was on the Committee's agenda. To the extent possible, comments and positions from such documents have been summarized in the Committee's report along with comments heard during the Committee's hearings.

In consideration of the comments received the Committee presented the block of items as shown in the Item Under Consideration for Vote.

Regional Association Comments:
At the WWMA 2018 fall Annual Meeting, the WWMA heard comments from Mrs. Butcher who noted there has been good progress on these items and the revised language will clear up confusion about how the repeatability requirements are to be applied and eliminate possible inconsistencies between NIST Handbook 44 and NCWM Publication 14. OWM's comments included that the intent of the current proposal is to move the current repeatability paragraphs in the proposal out from under the "Normal Tests" heading and assign a new number to them. Each newly numbered paragraph is also proposed to include some additional language from the original paragraph.

Hearing no comments in opposition to the items proposed in the block, the WWMA agreed the proposed changes will provide necessary clarifications to help ensure proper application of the repeatability criteria. The WWMA also agreed with comments heard that the current paragraphs should correctly appear as stricken text and the newly numbered paragraph should appear as bold, underlined text to identify them as new paragraphs. The following example illustrates how the WWMA believes the proposed changes should appear in each respective code included in this proposal.

Delete existing paragraph "Repeatability Tests."

> ~~**N.4.1.2. Repeatability Tests. – Tests for repeatability should include a minimum of three consecutive test drafts of approximately the same size and be conducted under controlled conditions where variations in factors such as temperature, pressure, and flow rate are reduced to the extent that they will not affect the results obtained.**~~
>
> ~~**(Added 2001)**~~

Add a new paragraph "Repeatability Tests" (including content from the previous deleted paragraph along with additional criteria):

> **N.4.6. Repeatability Tests. – Tests for repeatability should include a minimum of three consecutive test drafts of approximately the same size and be conducted under controlled conditions where variations in factors such as temperature, pressure, and flow rate are reduced to the extent that they will not affect the**

results obtained. When conducting the tests, the flow rates shall be within the minimum and maximum discharge rates as marked by the manufacturer. For devices with no marked minimum and maximum flow rates, the minimum discharge rates shall be as specified in N.4.2.1. or N.4.2.2. and the maximum discharge rates shall be the maximum discharge rate developed under the conditions of the installation. For devices equipped with an automatic temperature compensator, the results shall be based on uncompensated (gross) volume, i.e. with the temperature compensator deactivated.

(Added 20XX)

The WWMA recommends the items in this block of items be designated as Voting items on the NCWM S&T Committee's Agenda.

At the NEWMA 2018 fall Interim Meeting during the Committee's open hearings, no comments were heard. Hearing no opposition or discussion on this item, NEWMA believes this item is fully developed and recommends this as a Voting item.

At the NEWMA 2019 spring Annual Meeting, no comments were received during Committee open hearings. NEWMA recommended this as Voting on the NCWM S&T Committee agenda.

At the SWMA 2018 fall Annual Meeting, NIST OWM stated the proposal had been expanded to include other device codes in NIST HB44 and they agreed with the changes being proposed. The SWMA agrees that the item is fully developed and recommends it as a Voting item.

At the CWMA 2018 fall Interim Meeting, Mr. Charles Stutesman (Kansas) reported during the Committee's open hearings, NIST HB 44 allows for special tests if an issue is suspected. Therefore, Mr. Stutesman believes this proposal may not be necessary and should remain developing. CWMA agreed that this item be designated as developing because field testing can mirror NTEP evaluation procedures but, in this case, may not be appropriate

At the CWMA 2019 spring Annual Meeting, Kansas voiced support for this item. The CWMA agreed that this item should be designated as a Voting item.

Additional letters, presentations, and data may have been part of the Committee's consideration and were posted on the NCWM website during the time this item was on the Committee's agenda. To the extent possible, comments and positions from such documents have been summarized in the Committee's report along with comments heard during the Committee's hearings.

LMD – LIQUID MEASURING DEVICES

LMD-3 V A.1. General., S.2.5. Zero-Set-Back Interlock, for Retail ~~Motor-Fuel~~ Devices., S.4. Marking Requirements., S.5. Zero-Set-Back Interlock, for Retail ~~Motor-Fuel~~ Devices., UR.2.4. Diversion of Liquid Flow. and UR.2.5. Product Storage Identification.

(This item was Adopted.)

Source:
NIST OWM (2019)

Purpose:
To adequately address requirements for retail liquid measuring devices that measure DEF and other products.

This publication is available free of charge from: https://doi.org/10.6028/NIST.SP.1253

This publication is available free of charge from: https://doi.org/10.6028/NIST.SP.1253

Item Under Consideration:
Amend NIST Handbook 44 Liquid Measuring Device Code as follows:

A.1. General. – This code applies to:

(a) devices used for the measurement of liquids, ~~**including liquid fuels and lubricants,**~~ and

(b) wholesale devices used for the measurement and delivery of agri-chemical liquids such as fertilizers, feeds, herbicides, pesticides, insecticides, fungicides, and defoliants.

(Added 1985)

S.1.6.10. Automatic Timeout – Pay-At-Pump <u>for</u> Retail ~~Motor-Fuel~~ Devices. *– Once a device has been authorized, it must de-authorize within two minutes if not activated. Re-authorization of the device must be performed before any product can be dispensed. If the time limit to de-authorize the device is programmable, it shall not accept an entry greater than two minutes.*
[Nonretroactive as of January 1, 2017]

(Added 2016) **<u>(Amended 2019)</u>**

S.2.5. Zero-Set-Back Interlock, <u>for</u> Retail ~~Motor-Fuel~~ Devices – A device shall be constructed so that:

(a) after a delivery cycle has been completed by moving the starting lever to any position that shuts off the device, an automatic prevents a subsequent delivery until the indicating elements, and recording elements if the device is equipped and activated to record, have been returned to their zero positions;

(b) the discharge nozzle cannot be returned to its designed hanging position (that is, any position where the tip of the nozzle is placed in its designed receptacle and the lock can be inserted) until the starting lever is in its designed shut-off position and the zero-set-back interlock has been engaged; and

(c) in a system with more than one dispenser supplied by a single pump, an effective automatic control valve in each dispenser prevents product from being delivered until the indicating elements on that dispenser are in a correct zero position.

(Amended 1981**<u>,</u>** ~~**and**~~ 1985**<u>, and 2019</u>**)

S.4.4.1. Discharge Rates. *– On a retail device with a designed maximum discharge rate of 115 L (30 gal) per minute or greater, the maximum and minimum discharge rates shall be marked in accordance with S.4.4.2. Location of Marking Information; Retail ~~Motor-Fuel~~ Dispensers. The marked minimum discharge rate shall not exceed 20 % of the marked maximum discharge rate.*

[Nonretroactive as of January 1, 1985]

(Added 1984) (Amended 2003 **<u>and 2019</u>**)

S.4.4.2. Location of Marking Information; <u>for</u> Retail ~~Motor-Fuel~~ Dispensers. *– The marking information required in the General Code, paragraph G-S.1. Identification shall appear as follows:*

*(a) within 60 cm (24 in) to 150 cm (60 in) from the base of the dispenser **<u>for systems in a dispenser</u>**;*

(b) either internally and/or externally provided the information is permanent and easily read; and

(c) on a portion of the device that cannot be readily removed or interchanged (i.e., not on a service access panel).

Note: *The use of a dispenser key or tool to access internal marking information is permitted for retail liquid-measuring devices.*
[Nonretroactive as of January 1, 2003]

(Added 2002) (Amended 2004 **<u>and 2019</u>**)

…

S.5. Totalizers for Retail ~~Motor-Fuel~~ Dispensers *– Retail ~~motor-fuel~~ dispensers shall be equipped with a non-resettable totalizer for the quantity delivered through the metering device.*
[Nonretroactive as of January 1, 1995]

(Added 1993) (Amended 1994 **and 2019**)

…

N.4.2.2. Retail Motor-Fuel and DEF Devices

(a) Devices without a marked minimum flow-rate shall have a "special" test performed at the slower of the following rates:

(1) 19 L (5 gal) per minute; or

(2) the minimum discharge rate at which the device will deliver when equipped with an automatic discharge nozzle set at its slowest setting.

(b) Devices with a marked minimum flow-rate shall have a "special" test performed at or near the marked minimum flow rate.

(Added 1984) (Amended 2005 **and 2019**)

UR.2.4. Diversion of Liquid Flow. – A ~~motor-fuel~~ device equipped with two delivery outlets used exclusively in the fueling of trucks shall be so installed that any diversion of flow to other than the receiving vehicle cannot be readily accomplished and is readily apparent. Allowable deterrents include, but are not limited to, physical barriers to adjacent driveways, visible valves or lighting systems that indicate which outlets are in operation, and explanatory signs.

(Amended 1991 **and 2019**)

UR.2.5. Product Storage Identification.

(a) The fill connection for any petroleum product **or other product** storage tank or vessel supplying **petroleum product or other products** ~~motor-fuel devices~~ shall be permanently, plainly, and visibly marked as to product contained.

…

(Added 1975) (Amended 1976**, and 2019**)

Background/Discussion:
Diesel exhaust fluid (DEF) is a solution of urea and deionized water. It is used as an additive to diesel exhaust systems to lower the Nitrous Oxide (NOx) concentration in the diesel exhaust emissions from diesel engines. It is sold as a packaged product or dispensed using a liquid-measuring system. When sold in direct sales to retail customers, it is often dispensed directly into the customer's vehicle using a liquid-measuring device or system similar to, or identical in design to a retail motor-fuel dispenser and in the same type of retail environment. The LMD Code includes a number of paragraphs designed to help ensure transparency in transactions and deter facilitation of fraud in the retail environment. However, many of these paragraphs are currently limited to retail "motor-fuel" applications and DEF is not a motor fuel.

These paragraphs in the LMD Code that specifically apply to retail ***motor-fuel*** devices should also apply to DEF and possibly other retail liquid-measuring devices that measure products other than motor fuels. The NCWM has already recognized that requirements designed to ensure measurement accuracy and transparency shouldn't be limited to motor-fuel applications only and similar proposals to extend some of these requirements (e.g., zero setback interlock and timeout features) to devices in other codes have already been adopted or are being considered by the NCWM for

This publication is available free of charge from: https://doi.org/10.6028/NIST.SP.1253

This publication is available free of charge from: https://doi.org/10.6028/NIST.SP.1253

other retail measuring applications. As such, appropriate sections of the LMD Code must be modified so that these requirements are not restricted to devices that measure motor fuel.

Many DEF dispensing applications use the same type of dispensing systems as do retail motor-fuel applications and, thus, may already comply with the proposed changes. However, there may be other types of DEF measuring systems that do not currently comply with the proposed changes.

Note: *Information regarding this question will likely emerge during the vetting of the initial proposal and can be updated at that point. Additional concerns may also emerge during the vetting process and need to be included in this section.*

Due to a Government shutdown because of a lapse in appropriations, NIST OWM was unable to attend the 2019 Interim meeting. NIST OWM provided the NCWM S&T Committee with an analysis of this item prior to the Interim Meeting. The NIST OWM analysis is summarized below:

NIST OWM:

- OWM received an inquiry in reference to which requirements to apply to devices that measure diesel exhaust fluid (DEF).
- Currently, there are paragraphs in the LMD code that specifically apply to motor fuel but should also apply to other products dispensed in similar retail deliveries of other types of liquid.
- Although the inquiry was concerning DEF, during the development of the proposed language, NIST OWM considered that other retail products may be dispensed using the same method as what is used for motor fuel.
- The NIST OWM proposed language is broad to include all retail products, so that a laundry list of products is not needed when other products are dispensed using the same method.
- The WWMA expressed concerns with broadening the requirements to other products, such as water dispensing systems.
- Although, NIST OWM questions why all retail dispensing systems should not be subjected to the requirements in the LMD code, NIST OWM agrees with the WWMA's revisions to the proposal to include a specific reference to DEF in an effort to advance this proposal.
- There is a growing number of other liquids being dispensed in retail applications. Consequently, OWM recommends that the community may want to consider in a future proposal whether some of the requirements should be applied more broadly.

During the 2019 NCWM S&T Committee Interim Meeting, the S&T Committee considered the comments received prior to the Interim Meeting and recommended a Voting status for NCWM S&T agenda item LMD-3. The NCWM S&T Committee did not receive any additional comments to Agenda Item LMD-3.

During the 2019 NCWM Annual Meeting, Ms. Diane Lee (NIST OWM) commented that the current language as written in the handbook applies to motor-fuel dispensers but should also apply to DEF dispensers. Ms. Lee mentioned that additional information is included in OWM's analysis. Ms. Lee also stated that there are some other items that need to be cleaned up in the proposal and that she would work with Mr. Dmitri Karimov (Liquid Controls) on another proposal to clean up the language. Mr. Karimov, speaking on behalf of MMA, commented that he recognizes the need to add language to the code to clarify that the requirements also apply to DEF dispensers but noted that areas of the proposal needed some clean up and that he looks forward to working with OWM to develop another proposal to address these issues. During the Committee's work session, the members of the Committee agreed additional work is needed to clean up the language as recommended by OWM and MMA and recognized that NIST OWM would work with MMA in the 2020 cycle. As such, the Committee agreed to present the item for Vote.

Regional Association Comments:
At the WWMA 2018 fall Annual Meeting, Mrs. Tina Butcher (NIST OWM), submitter of the item, provided an overview of the circumstances that led to OWM's decision to submit this item. She noted a number of requirements

in the LMD Code should be applied to DEF dispensers which are used in the same type of applications as Retail Motor-Fuel Dispensers. However, DEF is not a motor fuel, and the application of those requirements has been challenged.

Mr. Kurt Floren (Los Angeles County, California) and Mr. Brett Gurney (Utah) expressed concerns that broadening these paragraphs to "retail devices" may not be appropriate because it would encompass other devices, such as water dispensing systems. Mr. Gurney commented, if the intent of the original issue was to address DEF, perhaps a solution would be to add only references to DEF. Mrs. Butcher questioned why those devices shouldn't be subject to the same requirements and noted the community may want to consider whether some of those requirements should be applied more broadly at some point. However, she agreed limiting the changes to specifically "DEF" would be an appropriate solution to the immediate problem.

During its work session, the WWMA expressed concern about broadening these requirements to encompass all retail devices, though in some cases, it may be appropriate. To avoid these concerns, the WWMA recommended replacing the proposal shown in the WWMA Agenda in the Item Under Consideration with the following and recommended the proposal with these modifications be designated as a Voting.

A.1. General. – This code applies to:

(a) devices used for the measurement of liquids, including **but not limited to** liquid fuels and lubricants, and

(b) wholesale devices used for the measurement and delivery of agri-chemical liquids such as fertilizers, feeds, herbicides, pesticides, insecticides, fungicides, and defoliants.

(Added 1985)

S.1.6.10. Automatic Timeout – Pay-At-Pump for Retail Motor-Fuel and Diesel Exhaust Fluid Devices. *– Once a device has been authorized, it must de-authorize within two minutes if not activated. Re-authorization of the device must be performed before any product can be dispensed. If the time limit to de-authorize the device is programmable, it shall not accept an entry greater than two minutes*
[Nonretroactive as of January 1, 2017]

(Added 2016) **(Amended 20XX)**

S.2.5. Zero-Set-Back Interlock, for Retail Motor-Fuel and Diesel Exhaust Fluid Devices – A device shall be constructed so that:

(a) after a delivery cycle has been completed by moving the starting lever to any position that shuts off the device, an automatic interlock prevents a subsequent delivery until the indicating elements and recording elements if the device is equipped and activated to record, have been returned to their zero positions;

(b) the discharge nozzle cannot be returned to its designed hanging position (that is, any position where the tip of the nozzle is placed in its designed receptacle and the lock can be inserted) until the starting lever is in its designed shut-off position and the zero-set-back interlock has been engaged; and

(c) in a system with more than one dispenser supplied by a single pump, an effective automatic control valve in each dispenser prevents product from being delivered until the indicating elements on that dispenser are in a correct zero position.

(Amended 1981**,** ~~and~~ 1985**, and 20XX**)

S.4.4.1. Discharge Rates. *– On a retail device with a designed maximum discharge rate of 115 L (30 gal) per minute or greater, the maximum and minimum discharge rates shall be marked in accordance with S.4.4.2. Location of Marking Information; Retail Motor-Fuel* **and Diesel Exhaust Fluid** *Dispensers. The marked minimum discharge rate shall not exceed 20 % of the marked maximum discharge rate.*
[Nonretroactive as of January 1, 1985]

(Added 1984) (Amended 2003 **and 20XX**)

This publication is available free of charge from: https://doi.org/10.6028/NIST.SP.1253

This publication is available free of charge from: https://doi.org/10.6028/NIST.SP.1253

S.4.4.2. Location of Marking Information; for Retail Motor-Fuel Diesel Exhaust Fluid Dispensers. *– The marking information required in the General Code, paragraph G-S.1. Identification shall appear as follows:*

(a) within 60 cm (24 in) to 150 cm (60 in) from the base of the dispenser ***for systems in a dispenser****;*

(b) either internally and/or externally provided the information is permanent and easily read; and

(c) on a portion of the device that cannot be readily removed or interchanged (i.e., not on a service access panel).

Note: *The use of a dispenser key or tool to access internal marking information is permitted for retail liquid-measuring devices.*
[Nonretroactive as of January 1, 2003]
(Added 2002) (Amended 2004 **and 20XX**)

…

S.5. Totalizers for Retail Motor-Fuel and Diesel Exhaust Fluid Dispensers *– Retail* ~~***motor-fuel***~~ *dispensers shall be equipped with a non-resettable totalizer for the quantity delivered through the metering device.*
[Nonretroactive as of January 1, 1995]
(Added 1993) (Amended 1994 **and 20XX)**

…

N.4.2.2. Retail Motor-Fuel and Diesel Exhaust Fluid Devices.

(a) Devices without a marked minimum flow-rate shall have a "special" test performed at the slower of the following rates:

(1) 19 L (5 gal) per minute; or

(2) the minimum discharge rate at which the device will deliver when equipped with an automatic discharge nozzle set at its slowest setting.

(b) Devices with a marked minimum flow-rate shall have a "special" test performed at or near the marked minimum flow rate.

(Added 1984) (Amended 2005 **and 20XX**)

Make no changes to UR.2.4.

UR.2.5. Product Storage Identification.

(b) The fill connection for any petroleum product or **other product** storage tank or vessel supplying **petroleum product or other products** ~~**motor-fuel devices**~~ shall be permanently, plainly, and visibly marked as to product contained.

…

(Added 1975) (Amended 1976**, and 20XX**)

At the NEWMA 2018 fall Interim Meeting. during its open hearings, the Committee received no comments. Hearing no opposition or discussion on this item, NEWMA believes this item is fully developed and recommended this as a Voting item.

This publication is available free of charge from: https://doi.org/10.6028/NIST.SP.1253

At the NEWMA 2019 spring Annual Meeting, no comments were heard during the open hearing. The Committee recommends this as a Voting item on the NCWM S&T Committee agenda.

At the SWMA 2018 fall Annual Meeting, NIST OWM stated that the proposal is to remove the words "Motor Fuel" to encompass products such as Diesel Exhaust Fluid or other products not named "Motor Fuel". A representative of Arkansas rose to discourage the use of acronyms in the language. (ex. DEF should read Diesel Exhaust Fluid in section N.4.2.2.)

The SWMA agrees with the proposal with the change: ~~DEF~~ Diesel Exhaust Fluid in the item and recommended it as a Voting item.

At the CWMA 2018 fall Interim Meeting, Mr. Charles Stutesman (Kansas) reported the terms Retail Motor Fuel Device and Retail Motor Fuel Dispenser need clarification. CWMA found several inconsistencies throughout the NIST HB 44 LMD Code and suggests that the term "dispenser" be replaced with "device", in addition to striking "motor fuel" as recommended in the proposal. There may also be an unintended consequence that would eliminate the exemption for special test tolerances for RMFD.

The CWMA Committee recommended this as a Developing item.

At the CWMA 2019 spring Annual Meeting, a State Official from Minnesota suggested that the word "fueling" in UR.2.4. be changed. The Committee believes an amendment may be necessary to achieve the proposed change. The Committee recommend that this be given a Voting status.

Additional letters, presentations, and data may have been part of the Committee's consideration and were posted on the NCWM website during the time this item was on the Committee's agenda. To the extent possible, comments and positions from such documents have been summarized in the Committee's report along with comments heard during the Committee's hearings.

LMD-4 W Airport Refueling Systems – Agreement of Indications and Reset to Zero

Source:
NIST OWM (2019)

Purpose:
Address self-service airport fueling dispensing systems equipped with a primary analog indicator and a separate card activated console with a printer that are used to fuel multiple tanks on aircrafts.

Item Under Consideration:
A specific proposal is not yet ready for consideration. This item is requested as a "Developing" item to allow an opportunity for the community to provide input on possible approaches that could be used to solve this problem. Details of the issue are provided in the "Justification" below.

Background/Discussion:
Minnesota Weights and Measures informed NIST that, during an inspection prompted by a complaint regarding an overcharge, metering systems at a self-serve airport fueling facility failed to comply with NIST HB 44, Liquid Measuring Devices Code. Specifically, the systems did not comply with the following requirements in NIST Handbook 44:

- S.2.5
- UR.3.1, and
- G-S.5.2.2.2

This publication is available free of charge from: https://doi.org/10.6028/NIST.SP.1253

These systems consist of one or more stationary meters, each of which is equipped with an individual analog indicator to register the fuel as it is delivered. These analog metering systems are interfaced with a central controller (typically located adjacent to the meters), which is used by the customer to activate an individual meter using a payment card such as a credit or debit card. The controller is also an indicator. After activating the transaction with a payment card, the customer delivers fuel using one of the individual metering systems interfaced to the controller. Each metering system is equipped with a mechanical reset, which is used by the customer to return the indications to a zero condition prior to delivery. Typically, customers will fill one receiving tank on an airplane and then, prior to filling the next tank on the plane, will use this reset feature to reset the indications to zero. This resetting action is not tracked by the controller.

When the customer is finished delivering product to all receiving tanks, he or she prints a receipt using the controller. The controller is not capable of ***indicating*** the quantity for either individual drafts or the total quantity delivered over the course of the transaction. The controller is not capable of ***printing*** the quantity for ***individual*** drafts; however, it does ***print*** the ***total*** quantity delivered over the course of the transaction, and it calculates a total sale amount based on this quantity and a preprogrammed unit price. As a result, at the end of a delivery, if the customer has reset the analog meter indications during the course of the total delivery, the indicated quantity on the meter does not agree with the total quantity printed on the receipt.

After Minnesota Weights and Measures (W&M) rejected one of these systems for failing to comply with the provisions of NIST Handbook 44, the Minnesota Department of Transportation (DOT) contacted both Minnesota W&M and NIST OWM to ask for assistance in addressing these systems. Numerous systems of this type were installed as part of a grant to establish a network of fueling points across a geographic area. A key purpose was to provide a safety net, which allows pilots to more readily access fueling points in the event of low fuel. Thus, the operation of these systems represents a significant safety issue. Changes to these systems to gain compliance could prove so costly as to result in closure of many of these sites. Having just become aware of the requirements in NIST HB 44 after the action by Minnesota, Minnesota DOT asked for assistance in developing proposed changes to NIST HB 44 which might allow these systems to continue to operate.

Minnesota DOT, Minnesota W&M and NIST OWM held a teleconference to review the requirements of NIST Handbook 44 and the impact on these devices and agreed that a proposal with a developing status should be drafted and submitted for discussion at the 2018-2019 Regional meetings and the NCWM Interim meeting. OWM agreed to champion the item in its developing stage to help gather input which will help develop proposed changes to NIST HB 44 that will best meet the needs of the community. A key goal is to identify requirements for how such systems need to operate to provide clear and transparent transaction information, without interrupting the service needed by consumers. A possible approach is to develop nonretroactive requirements which will apply to new systems and develop other requirements which will help existing systems move closer to compliance without significant cost or interruption to service.

In its review of this issue, NIST OWM identified multiple other paragraphs in NIST HB 44 which need to be considered as this proposal is developed. These include:

- G.S.2.
- S.1.6.3.
- S.1.6.5.6. (a)
- S.1.6.10.

NIST is still discussing options for these changes and are specifically discussing how to address systems currently in use and systems installed after a specific date. NIST, OWM has not developed a specific proposal, but wants to begin sharing this situation with officials, manufacturers, and users and allow an opportunity for input and discussion, beginning with the regional weights and measures associations and industry groups such as the Meter Manufacturers Association.

This publication is available free of charge from: https://doi.org/10.6028/NIST.SP.1253

Plans are to have Minnesota DOT available to provide information, and possibly a short presentation, on these devices at some of the Regional Weights and Measures Association meetings and/or the NCWM Interim Meeting. NIST OWM's initial thoughts are to provide requirements such that:

(1) Indicated and recorded representations are able to display quantity of individual drafts and the total quantity dispensed for the transaction and each clearly identified (e.g., "draft 1", "draft 2", "draft 3", etc. along with "total quantity".

(2) Permit use in self-serve operations.

(3) Include individual and totalized displays which are visible to the customer during the transaction.

(4) Ensure clear instructions are provided (possibly elaborating on current instructions).

(5) Ensure agreement between printed ticket and primary indicator.

(6) Ensure quantities are appropriately identified (e.g., "total quantity" vs. "draft 1").

In addition, consideration might be given to applying all these requirements to new systems while allowing current systems to only meet some of them (e.g., items 2, 3, and 4) or to be given an extended time frame after which they must meet all requirements. This could be done with a combination of nonretroactive and retroactive requirements.

The State of Minnesota inspected these systems because of a complaint from a customer who stated that 8 gallons of fuel was purchased but he was charged for 12 gallons. Allowing continued operation without changes to the systems or which exempt them from all current requirements for agreement and clarity might result in additional complaints and customer confusion and, thus, may lead to possible safety concerns.

Providing exemptions to current requirements for these systems may be perceived as unfair treatment to other systems used in similar applications. For example, retail motor-fuel dispensers in a service station interfaced with a console/controller, vehicle-mounted metering systems interfaced with a controller, and loading-rack metering systems interfaced with a centralized controller.

Pilots represented by the Aircraft Owners and Pilot Associations (AOPA), State Aviation Administrations, FAA, operators of small regional airports, particularly businesses, do not necessarily oppose the requirements of NIST HB 44 or good measurement practices, but they are very concerned that the cost of any corrections should not be so large that it forces small airports to abandon fueling services, thereby threatening the network of regional airports which support small aircraft. These airports provide a safety net in case of emergencies. Additionally, for physical and environmental safety, having aviation fuel stored and dispensed through a central service at small airports is preferable to pilots bringing fuel into airports or storing it in their hangars.

OWM personnel were unable to attend the 2019 NCWM Interim Meeting due to a Federal Government shutdown in early 2019 due to a lack of appropriations; however, OWM provided written comments to the Committee on this item in the advance of the meeting. OWM agrees with comments from the Regional W&M Associations that these systems do not currently meet the requirements of NIST HB 44 and identified specific code sections and basis for noncompliance.

- S.2.5. Zero-Set-Back Interlock, Retail Motor-Fuel Devices. – This system has a controller that will print an amount different than what appears on the analog device. The analog device is allowed to re-zero while the controller will print a total amount delivered.
- UR.3.1. Return of Indicating and Recording Elements to Zero. – These systems have a controller that is not returned to zero when the analog device is returned to zero.
- G-S.5.2.2. Digital Indication and Representation. – All digital values do not agree with each other. For example, the Analog device may read 10 gallons, but the controller will print a receipt that reads 20 gallons dispensed because the analog device is allowed to re-zero between filling different tanks on the plane.

This publication is available free of charge from: https://doi.org/10.6028/NIST.SP.1253

- G-S.2. Facilitation of Fraud. – The operation of the current device may contribute to facilitation of fraud. If one transaction is left uncompleted, the next person refueling will be charged for the previous transaction and the current transaction.
- S.1.6.3.- Return to Zero. – The controller on this system is the primary recording element, and it is not returned to zero at the end of the transaction.
- S.1.6.5.6. (a) Display of Quantity and Total Price, Aviation Refueling Applications - The quantity is not displayed throughout the transaction.
- S.1.6.10 – The transaction may not automatically time out. These systems were inspected based on a complaint. The customer stated that he was overcharged. So, the controller may have had a previous customer's transaction that was added to his/her transaction because the controller did not time out.

OWM held a conference call with Minnesota (MN) DOT which installed these systems without the knowledge of weights and measures regulations and NIST HB 44. During the conference call, MN DOT explained that these unattended systems were installed as part of a grant to establish more readily accessible fueling points in the event of low fuel. Additionally, the design of the system is intended to allow a pilot to determine the amount of fuel that he or she puts into each individual tank without potential mathematical errors that may result from manual calculations.

OWM acknowledges that some sites may choose to remove the systems from service rather than making modifications to bring them into compliance with NIST HB 44. This could result in fewer fueling points, possibly raising safety concerns. Allowing exemptions for the installed systems will place other companies who are able to meet the existing NIST HB 44 requirements at a competitive disadvantage.

OWM recognizes that some comments received have suggested withdrawing the item; however, OWM is mindful of the need to work with the community to arrive at an appropriate solution. Designating this item as a Developing item would allow NIST OWM and MN DOT to continue to work with the community in an effort to bring these systems into compliance. OWM's initial thoughts for compliance are that:

(1) Indicated and recorded representations are able to display quantity of individual drafts and the total quantity dispensed for the transaction and each clearly identified (e.g., "draft 1", "draft 2", "draft 3", etc. along with "total quantity".

(2) Permit use in self-serve operations.

(3) Include individual and totalized displays which are visible to the customer during the transaction.

(4) Ensure clear instructions are provided (possibly elaborating on current instructions).

(5) Ensure agreement between printed ticket and primary indicator.

(6) Ensure quantities are appropriately identified (e.g., "total quantity" vs. "draft 1").

In addition, consideration might be given to applying all these requirements to new systems while allowing current systems to only meet some of them (e.g., items 2, 3, and 4) or to be given an extended time frame after which they must meet all requirements. Another solution that has been suggested is to include additional instructions/guidance to users that would prohibit resetting the analog indications to zero between drafts.

During open hearings at the 2019 NCWM Interim Meeting, the Committee heard comments from both industry and regulators.

Mr. Dan Murray (Murray Equipment/Total Control Systems) commented he does not support this item and recommends it be withdrawn, noting this is more of a user issue. He stated the pilot is responsible for knowing how much fuel has to go in each wing, there are times when the site is unattended, and there is a preset option that the pilot can select for the amount that goes into each wing.

Mr. Richard Suiter (Richard Suiter Consulting) agreed with Mr. Murray that it is the pilot's responsibility to control the amount of fuel delivered to each wing and noted the item arose because of a pilot's mistake. If the system is used as intended, the pilot will have the information they need.

This publication is available free of charge from: https://doi.org/10.6028/NIST.SP.1253

Ms. Julie Quinn (Minnesota) commented the intent of this item is not to change what is out there. Rather, the intent is to recognize that this equipment in service now does not meet NIST HB 44 due to the system being able to re-zero the indicator during a delivery and resulting in different values among the indicated values and the printed receipt. There may need to be an exception made for these systems. Weights and measures officials are reluctant to reject these systems. Ms. Quinn strongly recommends making this a Developing item.

Mr. Murray stated the market will work itself out. He said there is equipment available today that meets the needs of the application and complies with NIST HB 44. Veeder Root has a micro switch that would solve the issue in the systems described.

Mr. Michael Keilty (Endress + Hauser Flowtec AG USA) agreed with Mr. Murray that there is equipment available to make these systems comply, noting the equipment is improperly installed and should be corrected. There should not be an exception made for them in NIST HB 44. He recommends that the item be withdrawn.

Mr. Charlie Stutesman (Kansas) supported withdrawing the item. He agreed with others that the system should comply with the NIST HB 44 requirements and noted that code requirements are already in place to address this situation. He feels that this is an educational issue with the agencies that oversaw the installation of this equipment, and the issue is one of improper use of equipment.

In consideration of the comments received in opposition to this item and the recommendation for its withdrawal, the Committee agreed to withdraw this item from its agenda.

At the 2019 NCWM Annual Meeting, this item had a Withdrawn status, and, as such, no comments or discussion were heard on this item.

Regional Association Comments:
At the WWMA 2018 fall Annual Meeting, Mrs. Tina Butcher (NIST OWM), submitter of the item, explained the issue and outlined the key concerns involved.

Mr. Paul Jordan (Ventura County, California) questioned if, rather than modifying the Handbook, there could be a change in how the systems are operated. Mr. Steven Harrington (Oregon) indicated, in his view, the proposed item is attempting to solve a local enforcement issue by changing the Handbook and, more significantly, the General Code. There were others questioning why an exemption should be permitted when every other measuring system would be required to meet agreement requirements. Mr. Suiter, identifying himself a pilot, noted most pilots would not reset the indications between drafts. He suggested Aircraft Owners and Pilots Association (AOPA) might be a good resource to consult for assistance in developing this item.

During its work sessions, the WWMA S&T Committee noted the device is being used in a manner that doesn't comply with the current provisions of the Handbook. If a user or operator can re-zero the indications in the middle of the dispensing operation without having this reflected in the total sale, this is a problem and could potentially lead to fraudulent use. Based on the comments heard in the open hearings and its discussions, the WWMA doesn't believe exemptions are warranted in NIST Handbook 44.

The WWMA reported it believes this is a local issue and there is no justification to include exemptions in NIST HB 44. Current systems could possibly be used appropriately by completing a sale after filling one wing and reauthorizing the system for a second transaction. Alternatively, instructions that prohibit re-zeroing the mechanical indicator between drafts could be posted on the dispensing system. Additionally, instructions should be provided to the device owner regarding proper operation of the systems by the user. The WWMA strongly recommends future installations use equipment that meets all provisions of NIST Handbook 44. There are already devices commercially available that can meet these requirements. Based on discussions and the rationale above, the WWMA decided to withdraw this item from its agenda and not forward it to NCWM.

At the NEWMA 2018 fall Interim Meeting, no comments were received. During the work session, the NEWMA S&T Committee determined the item may not accomplish its intended goals and requires further development by the submitter. NEWMA recommends this Item be designated a Developing item.

At the SWMA 2018 fall Annual Meeting, Mr. Suiter stated these devices are being used after hours, and there is currently not a specific proposal. A representative of NIST stated the item was prompted by a consumer complaint about one of these systems and an issue with agreement of indications within the system. The SWMA believes that a proposal should be developed prior to the item being considered and recommends the item be Withdrawn.

At the CWMA 2018 fall Interim Meeting, Ms. Quinn explained the history of this proposal. Mr. Keilty stated the Measuring Sector summarized the issue as a mechanical and electronic interface issue. The Sector agreed this system as described will not comply with NIST HB 44, and an exception would not be appropriate. The system would need to be re-equipped to be brought into compliance. The CWMA supports the further development of this item.

Additional letters, presentations, and data may have been part of the Committee's consideration and were posted on the NCWM website during the time this item was on the Committee's agenda. To the extent possible, comments and positions from such documents have been summarized in the Committee's report along with comments heard during the Committee's hearings.

LMD-5 V UR.3.4. Printed Ticket

(This item was Adopted.)

Source:
Morrow and Carroll Counties, Ohio (2019)

Purpose:
Allow adequate time for users to upgrade existing equipment to meet requirements that will become effective in 2019.

Item Under Consideration:

UR.3.4. Printed Ticket. –

~~...~~

~~**Establishments with a single dispenser having multiple meters or not more than one individual dispenser with a single meter for each product delivered are exempt from the dispenser designation requirement.**~~
~~**(Retroactive as of January 1, 2023.)**~~

~~**(Added 2020)**~~

Establishments where no product grades are repeated are exempt from the dispenser designation requirement.

(Amended 2019)

Technical Advisors Note*: The original proposal submitted by Morrow and Carroll Counties, Ohio in 2019 was amended by the Committee at the 2019 NCWM Annual Meeting. The original Proposal shown below for reference:*

UR.3.4. Printed Ticket. – The total price, the total volume of the delivery, the price per liter or gallon, *and a corresponding alpha or numeric dispenser designation shall be shown*, either printed by the device or in clear hand script, on any printed ticket issued by a device and containing any one of these.

(Amended, 2001 and 2019) (*Nonretroactive as of January 1, 2021*)

Establishments with a single dispenser having multiple meters or not more than one individual dispenser with a single meter for each product delivered are exempt from the dispenser designation requirement. (Retroactive as of January 1, 2023.)

(Added 2020)

This publication is available free of charge from: https://doi.org/10.6028/NIST.SP.1253

This publication is available free of charge from: https://doi.org/10.6028/NIST.SP.1253

Background/Discussion*:*
(Discussion on Original Proposal submitted by Morrow and Carroll Counties, Ohio in 2019).

The nonretroactive amendment adopted in 2019 addresses devices installed in the future (its effective date is 2021); however, it does not affect devices that are currently in use or existence. Making UR.3.4. "Printed Ticket" retroactive as of January 1, 2023 will allow users time to upgrade their current devices, either with software or machinery to meet this requirement. The 2021 effective date of the nonretroactive part of paragraph 3.4 gives industry time to make the necessary changes to their software and devices. Once this has been accomplished, the same corrections can be made to existing devices currently in use. The addition of the single dispenser language to UR.3.4. will exempt small establishments from meeting the requirement because there would be no confusion from which dispenser the product was delivered.

Implementation of this requirement to dispensers in existence or currently in use is no different from the upgrades required when the cost of fuel jumped requiring both analog and digital dispensers to be able to calculate gas at a higher price per gallon.

This will make identification of dispensers in question easier for the customer, operator, and the weights and measures official when determining which dispenser may be in error during a complaint investigation. In discussions with a dispenser manufacturer, the addition of a retroactive clause and proposed time frame will not be a problem for them to meet the requirement.

The submitters of this item identified the following possible issues occurring from those having to comply with this requirement:

- Small establishments with at least 2 dispensers may argue that the cost to upgrade software or devices may be cost prohibitive and/or requiring that hand writing the designation will slow down business as the customer will have to enter the establishment to have the attendant mark the receipt.
- Manufacturers may argue that the upgrade of current devices are not possible due to age of the device hardware or restrictions of current programming capabilities of the software.

OWM personnel were unable to attend the 2019 NCWM Interim Meeting due to the Federal Government shutdown in early 2019 due to a lack of appropriations; however, OWM provided written comments to the Committee on this item in the advance of the meeting, including a summary of comments from the Measuring Sector's discussion of the item at its Fall 2018 meeting.

During the Fall 2018 Measuring Sector Meeting discussion of this item, a question was raised about the purpose of the exception in paragraph UR.3.4. Printed Ticket as it applies to a single multi-product dispenser. Such a device often has two sides, which means that not including the dispenser designation on receipts issued by such a device will not clearly indicate the hose and meter used by a customer. A better approach might be to make the exception applicable only to single-hose, single-meter dispensers. Additionally, the requirement should be related to the hose, not the meter.

For RMFDs interfaced with point-of-sale (POS) systems, this information is controlled by the POS system software, not the RMFD. Thus, a specific model of RMFD at one station might print out the correct information, but the same model of RMFD may not print out the correct information at another station. Several Sector members pointed out that operation is dependent on the programming of the POS system, not the RMFD design or functionality. OWM agrees some exemption may be appropriate for small stations where there would be no difficulty in determining which dispenser is used for a given transaction. For example, if there is only one dispenser at a station, it seems unnecessary to require a dispenser number to be designated on the receipt. However, OWM concurs with questions raised during some of the regional weights and measures association meetings, as well as at the September 2018 Measuring Sector meeting, that clarification is needed on how to apply the proposed exemption.

OWM also concurs with the concerns raised during the Measuring Sector's discussion that even a single "dispenser" might be equipped with multiple meters, and those meters may serve different sides of a dispenser. For example, Side A of a dispenser might include a low-grade and high-grade meter and Side B of the same dispenser might include an

additional low-grade meter and an additional high-grade meter. If such a dispenser were exempt, it might be difficult to determine which meter was in question in the case of a dispute.

OWM suggests modifying the exemption by striking the proposed text as follows and inserting the double underlined alternative:

> **Establishments with a single dispenser ~~having multiple meters or not more than one individual dispenser with a single meter for each product delivered~~ <u>equipped with a single-hose and single meter</u> are exempt from the dispenser designation requirement.**

OWM also recommends modifying the effective dates to make it clear that the entire paragraph would become retroactive in 2023.

The revised proposal would read as follows:

> **UR.3.4. Printed Ticket**. – The total price, the total volume of the delivery, the price per liter or gallon, *and a corresponding alpha or numeric dispenser designation shall be shown*, either printed by the device or in clear hand script, on any printed ticket issued by a device and containing any one of these.
>
> **<u>Establishments with a single dispenser equipped with a single-hose and single meter are exempt from the dispenser designation requirement.</u>**
>
> *[Nonretroactive as of January 1, 2021;* ***to become retroactive as of January 1, 2023]***
>
> (Amended, 2001 and 2019)

At the 2019 NCWM Interim Meeting, the Committee heard no comments on this issue during its open hearings.

During its 2019 Interim Meeting work session, the Committee considered the differences recommended by the regional associations on the proposed status of the item. However, given the lack of comments during the open hearings and the fact that there is specific language in the Item Under Consideration, the Committee believes the item is well enough developed and is ready to move forward for a Vote. The Committee did not discuss the alternate language proposed by the submitter, NIST OWM, or the recommendation from the Measuring Sector in any detail; however, believes the language in the Item Under Consideration is adequate as written.

During the 2019 NCWM Annual Meeting open hearings, Mr. Tom Konst (Carroll County. Ohio) commented that there was an oversight in drafting this requirement as to how it might affect smaller retailers such as mom and pop stores and gave some examples where some sort of exemption may be needed. He stated that he would support OWM's changes that have been submitted.

Mrs. Tina Butcher (NIST OWM) spoke to the NIST OWM written analysis of S&T Items that were posted on the NCWM website and copies provided during the NCWM annual meeting that offers some alternatives for the NCWM S&T Committee to consider.

During the 2019 NCWM Annual Meeting S&T Committee work session, the Committee members amended the item as shown in the Item Under Consideration.

Regional Association Comments:
At the WWMA 2018 fall Annual Meeting, the WWMA heard no comments on this item during its open hearings. During its work session, the WWMA S&T Committee shared concerns that this appears to be attempting to provide an exemption from the provisions of paragraphs S.1.6.7. and S.1.6.8., which currently require the pump number be included on receipts for equipment installed as of 2021. The WWMA reported it believes additional work is required on this item to ensure there is no confusion about the application of the proposed requirements. Consequently, the WWMA recommended this be designated as a Developing item.

At the NEWMA 2018 fall Interim Meeting, Mr. Walt Remmert (Pennsylvania) reported during the Committee's open hearings, a paperless option for a receipt should be considered.

This publication is available free of charge from: https://doi.org/10.6028/NIST.SP.1253

This publication is available free of charge from: https://doi.org/10.6028/NIST.SP.1253

The Committee believed this item has merit but that the submitter should take regional comments into consideration and continue developing. NEWMA recommended this as a Developing item.

At the NEWMA 2019 spring Annual Meeting, the S&T Committee received no comment on this item. NEWMA recommended this item as a Voting item on the NCWM S&T Committee agenda.

At the SWMA 2018 fall Annual Meeting, Arkansas noted that dispensers are not required to be numbered. Consequently the proposed requirement would not be practical. The SWMA agreed and recommended the item be Withdrawn.

At the CWMA 2018 fall Interim Meeting, Mr. Konst explained this item and requested that the item be amended as follows:

> **UR.3.4. Printed Ticket**. – The total price, the total volume of the delivery, the price per liter or gallon, *and a corresponding alpha or numeric dispenser designation shall be shown*, either printed by the device or in clear hand script, on any printed ticket issued by a device and containing any one of these.
>
> (Amended, 2001 and 2019) (*Nonretroactive as of January 1, 2021* **becoming Retroactive as of January 1, 2023**)
>
> **Establishments with a single dispenser having multiple meters or not more than one individual dispenser with a single meter for each product delivered are exempt from the dispenser designation requirement.**
>
> **(Retroactive as of January 1, 20~~23~~XX.)**
>
> **(Added 20XX)**

The Committee recommended this as a Voting item.

A the CWMA 2019 spring Annual Meeting, Mr. Konst expressed support for this item. Ms. Diane Lee (NIST OWM) suggested modifying UR.3.4. in the proposal as follows:

> Establishments with a single dispenser ~~**having multiple meters or not more than one individual dispenser with a single meter for each product delivered**~~ **equipped with a single-hose and single meter** are exempt from the dispenser designation requirement.

Mr. Charlie Stutesman (Kansas) voiced support for this item as proposed.

Additional letters, presentations, and data may have been part of the Committee's consideration and were posted on the NCWM website during the time this item was on the Committee's agenda. To the extent possible, comments and positions from such documents have been summarized in the Committee's report along with comments heard during the Committee's hearings.

VTM – VEHICLE TANK METERS

VTM-1 V S.3.1.1. Means for Clearing the Discharge Hose and UR.2.6. Clearing the Discharge Hose.

(This item was returned to Committee.)

Source:
New York and NIST OWM (Carryover from 2018, VTM 1-B)

This publication is available free of charge from: https://doi.org/10.6028/NIST.SP.1253

Purpose:
Provide specifications and user requirements for manifold flush systems. Recognize that there is a balance between a mechanism that provides an important safety benefit but also, if used incorrectly, facilitates fraud. Ensure that VTM owners understand their responsibilities when installing such a system and ensure uniformity in enforcement throughout the country.

Item Under Consideration:
Amend NIST Handbook 44 Vehicle-Tank Meters Code as follows**:**

S.3.1.1. Means for Clearing the Discharge Hose. - Metering systems may be equipped with systems specifically designed to facilitate clearing of the discharge hose prior to delivery to avoid product contamination. In such systems. a valve to temporarily divert product from the measuring chamber of the meter to a storage tank, shall be installed only if all the following are met:

(a) the discharge hose remains of the wet-hose type;

(b) the valve and associated piping are approved by the weights and measures authority having jurisdiction over the device prior to commercial use;

(c) the valve is permanently marked with its purpose (e.g. flush valve);

(d) the valve is installed in a conspicuous manner and as far from the hose reel as practical;

(e) the system clearly and automatically indicates the direction of product flow during operation of the flush system; and

(f) clear means, such as an indicator light or audible alarm, is used to identify when the valve is in use ***on both quantity indications and any associated recorded representations (e.g., using such terms as "flushing mode" or "not for commercial use");***

nonretroactive as of January 1, 2022 to become retroactive January 1, 2025]

(Amended 20XX)

(g) effective, automatic means shall be provided to prevent passage of liquid through any such flush system during normal operation of the measuring system; and
[nonretroactive as of January 1, 2022 to become retroactive January 1, 2025]
(Amended 20XX)

(h) no hoses or piping are connected to the inlet when it is not in use.
(Added 2018) **(Amended 20XX)**

UR.2.6. Clearing the Discharge Hose

UR.2.6.1. Clearing the Discharge Hose, General. – A manifold flush or similar system designed to assist in flushing product between deliveries is not to be used or operational during a commercial transaction. The inlet valves for the system are not to be connected to any hose or piping (dust covers are permitted) when not in use. When the flushing system is in operation, the discharge hose is only to be connected to the port for the product type being flushed from the discharge line. Following the flushing process, indications and recording elements must be reset to zero prior to beginning a commercial delivery.

(Added 20XX)

R.2.6.2. Records. Whenever, prior to delivery, a different product is pumped through the discharge hose to avoid contamination, a record including the date, time, original product, new product, and gallons pumped

shall be maintained. These records shall be kept for a period of 12 months and available for inspection by the weights and measures authority.

(Added 2018)

Background/Discussion:
The following includes background from the original submitter of this item (New York).

Manifold flush systems are typically used on VTMs with multiple compartments, delivering multiple products through a single hose. The purpose of the system is to allow the driver a means of clearing the hose of product prior to delivery (e.g., clearing the hose of diesel fuel before delivering clear kerosene). These types of systems are often marketed as a safety feature in that it eliminates the need for the driver to climb on top of the truck to clear the hose. Such systems are also useful in helping avoid cross-contamination. Typically, the driver attaches the nozzle to the manifold and pumps product back into the supply tank via the manifold until the previous product is flushed from the hose. There is often a sight gauge which allows the driver to tell when the product is flushed.

The obvious concern is that this makes it very easy for the driver to circulate product through the meter prior to delivery, which goes against S.3.1. It should be noted that it also goes against S.3.1. when the driver climbs on top of the tanker and clears the hose. The distance between the flush system and the hose reel is also a factor in how easy it is for the driver to facilitate fraud.

Manifold flush systems are available from OEMs and can be found in various catalogs. Looking on multiple websites, these systems are being installed across the country and for some manufacturers seem to be standard equipment for new trucks. New York has also seen these systems installed on trucks that are for sale where the seller notes the system as a selling point. New York foresees these systems being mandated in the future as a safety requirement and would like weights and measures to have a clear policy before that happens.

Another concern is with systems that are fabricated onsite. These systems are often difficult to distinguish and installed in an inconspicuous manner. While New York has ordered many of these systems out-of-service until repaired, it can be frustrating for the owner because the truck was used in another state for years and approved by weights and measures. This lack of uniformity is problematic for both weights and measures and private industry.

New York (as the original submitter of a proposal to address these systems) is not aware of any jurisdictions that prohibit such systems and believes they are valuable for safety. New York also does not think it would be appropriate to require multiple meters and hoses due to cost and safety concerns for driver safety. It would be acceptable to have the meter automatically print a flush ticket, but the submitter questions whether this can be done, especially for systems that have been in the marketplace for many years.

At the 2018 NCWM Annual Meeting, the Committee adopted changes to S.3.1. Diversion of Measured Liquid to provide exemptions for metering systems with multiple compartments delivering multiple products through a single discharge hose, provided those systems met the provision of a newly added paragraph S.3.1.1. Means for Clearing the Discharge Hose. The NCWM also adopted a new user requirement to address the maintenance of records when product is flushed between deliveries of different product types.

OWM and others have raised concerns about how such systems can, without additional safeguards, facilitate fraud. Over the past few years, at the 2018 Interim Meeting, and leading up to the 2018 NCWM Annual Meeting, OWM had proposed additional requirements to help address those concerns; however, those changes could not be included at the 2018 meeting without delaying voting on the remaining portion of the proposal. The Committee, with support from New York (as the original submitter), OWM, MMA, and others decided to move forward with a portion of the proposal for a vote and carry the remaining portion of OWM's suggested changes over as an item on the Committee's agenda. New York and OWM agreed to assume joint responsibility for this carryover item.

The changes proposed in this carryover item are intended to ensure such systems are designed such that they do not facilitate fraud; help ensure owners understand their responsibilities when installing such a system; and ensure

This publication is available free of charge from: https://doi.org/10.6028/NIST.SP.1253

uniformity in enforcement throughout the country. The changes reflect suggested language from OWM's previous analyses of this issue and incorporate comments received from the MMA and others during the 2018 NCWM Annual Meeting. The submitter has suggested some of these changes may need to be made "nonretroactive" to allow time for manufacturers of flush systems to incorporate the safeguards into their system. New York and OWM welcome comments as this item is further considered.

The Committee's intent in creating this carryover item was to allow additional time for review and comment on the proposed changes, with the goal of moving these changes forward for a vote in 2019.

During the NCWM 2019 Interim Meeting, the Committee heard comments to Agenda Item VTM-1 and received position statements from MMA. NIST OWM was unable to attend the 2019 Interim meeting due to a Government shutdown because of a lapse in appropriations. OWM provided an analysis to the Committee prior to the Interim Meeting. The comments heard during the open hearings, discussed and/or received prior to the Interim meeting, are summarized below:

- Mr. Hal Prince (Florida) stated that the agenda item was a great but that it was missing limitation of use when delivering multiple products. He suggested that the Committee should consider language forwarded by the SWMA in its 2018 annual report. Mr. Prince also suggested that the item be kept developmental. Mr. Prince provided written comments from the SWMA.

- Mr. Dan Murray (Murray Equipment/Total Controls System) stated that manifold flush systems were a big problem in Europe where they are permitted. Mr. Murray suggested these flush systems could facilitate fraud and NTEP should evaluate them. These systems should also be sealed. Mr. Murray recommended withdrawing the item.

- Mr. Jim Willis (New York) stated that he would prefer the item move forward for adoption.

- Mr. Dmitri Karimov (Liquid Controls), speaking on behalf of MMA, stated that the MMA objected to manifold flush systems.

In its written analysis of this item, NIST OWM agreed with the WWMA and the CWMA that the item is fully developed and supported assigning it a Voting status. OWM provided the following review of the operation of the equipment, proposed changes, and additional points to consider:

- At the 2018 NCWM Annual Meeting, the Conference voted to allow an exemption to S.3.1. for Manifold Flush Systems, which is currently in the 2019 NIST HB 44 VTM code.
- Paragraph S.3.1. states that "no means" shall be provided to divert liquid from the measuring chamber of the meter or the discharge line.
- A manifold flush system allows liquid to be diverted from the discharge line on single hose multicompartment VTMs so that liquid of one product is not mixed with liquid of another in the discharge line.
- Without a manifold flush system, the operator must manually return the product to the correct compartment to clear the discharge line before using another product.
- There are safety hazards with manually returning the product to storage (operator climbing on top of tank and lifting hose to return the product. There are also safety concerns when not properly clearing the discharge lines prior to delivering a different product.
- Because of these safety concerns, it was reported that more of these systems will likely be installed on single hose multicompartment trucks.
- Although safety is a high priority, the "means" used to return product back to storage is not as visible and makes facilitation of fraud a high possibility.

This publication is available free of charge from: https://doi.org/10.6028/NIST.SP.1253

- The additional changes proposed are intended to ensure such systems are designed such that they do not facilitate fraud; help ensure owners understand their responsibilities when installing such a system; and ensure uniformity in enforcement throughout the country.
- The changes reflect the suggested language from OWM's previous analysis and incorporate comments received from the MMA and others during the 2018 Annual meeting.
- Nonretroactive dates may need to be added to allow time for manufacturers of flush systems to incorporate the safeguards into their systems.

In consideration of the comments received, the Committee recommended a Voting status for this item at the 2019 NCWM Interim S&T Committee

At the 2019 NCWM Annual Meeting, the Committee heard comments on this item during its open hearings. Mrs. Tina Butcher (NIST OWM) recommended additional changes based on discussion of this item by the MMA in a meeting held the Sunday prior to the Committee's open hearing. A written copy of those changes were submitted to the S&T Committee concerning bullet points of subpart (f) and (g). Mr. Willis and NEWMA recommended those changes be nonretroactive. Mr. Karimov voiced support for an interlock requirement.

During the S&T Committee's work session, the Committee agreed to change the portion of subpart (f) being proposed for addition and all of subpart (g) from retroactive as it proposed to nonretroactive as of January 1, 2022 to become retroactive January 1, 2025 and as shown in the Item Under Consideration. With these changes, the Committee agreed to present the item for a vote.

Regional Association Comments:
The WWMA 2018 fall Annual Meeting, Mrs. Butcher, co-submitter of the item, outlined the history of the proposal, noting the proposed changes are a follow-on to the related item adopted at the 2018 NCWM Annual Meeting to address the appropriate use of these systems. At that meeting, NIST OWM recommended additional changes as shown in the current proposal to help ensure systems are designed with features that help minimize the potential for fraud when these manifold systems are in use and to ensure owners/operators understand what criteria they must adhere to when using the device. The two submitters of this item (NIST OWM and New York) believe these changes are ready for consideration as Voting items.

Hearing no other comments from the body on this item, the WWMA recommends the item be designated as a Voting item.

At the NEWMA 2018 fall Interim Meeting, Mr. Mike Sikula (New York) reported during the Committee's open hearings, expressing support for the direction of this proposal. Mr. Sikula stated he is not aware of any flush systems that communicate with a metering system at this time and recommends this item continue as an Informational item in order to gather more information from meter manufacturers.

The Committee recommended this as Informational Item.

At the NEWMA 2019 spring Annual Meeting, Mr. Sikula spoke in support of this item but believes the effective date should be 3 years out. Expects to have to work with every manufacturer and each metering system. He states there is a difficulty associated for mechanical systems working with electronic commands. He supports a 3-year effective date and nonretroactive at this time. Mr. Jim McEnerny (Connecticut) commented that Connecticut does not support this. Mr. Richard Harshman (NIST OWM) included that it is important to note this is on multicompartment trucks with a single meter, which not all states have.

The Committee recommends this as a Voting item on the NCWM S&T Committee agenda with the following changes to the shaded portions below:

This publication is available free of charge from: https://doi.org/10.6028/NIST.SP.1253

(f) clear means, such as an indicator light or audible alarm, is used to identify when the valve is in use ***on both quantity indications and any associated recorded representations (e.g., using such terms as "flushing mode" or "not for commercial use");***
[nonretroactive as of January 1, 2022 to become retroactive January 1, 2025]

(g) ***effective, automatic means shall be provided to prevent passage of liquid through any such flush system during normal operation of the measuring system; and***
[nonretroactive January 1, 2022 to become retroactive January 1, 2025]

At the SWMA 2018 fall Annual Meeting, a representative of Florida stated that he understands this proposal was submitted to allow companies to purge similar products but warned of cross-contamination of non-compatible products (Diesel and Gasoline) when a single hose and single meter was used for a multiple compartment truck. NIST OWM believes the item to be fully developed. The SWMA would like for the proposal to state this was meant for heating oil product applications only. With this addressing the heating oil application, they are recommending it be a Voting item.

At the CWMA 2018 fall Interim Meeting, the Committee heard no comments during its open hearing. CWMA recommends this as a Voting item with clarification of when this will be implemented and what requirements are nonretroactive.

At the CWMA 2019 spring Annual Meeting, the Committee heard no comments during its open hearing. The CWMA recommended this as a Voting item.

Additional letters, presentations, and data may have been part of the Committee's consideration and were posted on the NCWM website during the time this item was on the Committee's agenda. To the extent possible, comments and positions from such documents have been summarized in the Committee's report along with comments heard during the Committee's hearings.

LPG – LPG AND ANHYDROUS AMMONIA LIQUID-MEASURING DEVICES

LPG-2 V S.2.5. Zero-Set-Back Interlock, Stationary and Vehicle Mounted Meters, Electronic

(This item was Adopted)

Source:
Maryland (2018)

Purpose:
To align the LPG Code with the VTM Code for electronic registers/indicators used in stationary and mobile applications.

Item Under Consideration:
Amend NIST Handbook 44 LPG and Anhydrous Ammonia Liquid-Measuring Devices Code as follows:

S.2.5. Zero-Set-Back Interlock, Stationary and Vehicle Mounted Meters, Electronic. - A device shall be so constructed that after an individual or multiple deliveries at one location have been completed, an automatic interlock system shall engage to prevent a subsequent delivery until the indicating and, if equipped, recording elements have been returned to their zero position. For individual deliveries, if there is no product flow for two minutes the transaction must be completed before additional product flow is allowed. The 2-minute timeout shall be a sealable feature on an indicator.

(Nonretroactive as of 2021)

(Added 2019)

This publication is available free of charge from: https://doi.org/10.6028/NIST.SP.1253

S.2.6~~5~~. Zero-Set-Back Interlock for Stationary Retail Motor-Fuel Devices. *– A device shall be constructed so that:*

…

Renumber remaining paragraphs

Background/Discussion:
Following the 2018 NCWM Interim Meeting, this item was assigned to the submitter for further development and members were asked to contact the submitter for information about the proposal or to share additional comments. Based on further development by the submitter and comments from the weights and measures community, the Committee modified the proposal and is recommending the modified version for a Vote as shown in the Item Under Consideration above. Background information and input on this item as it developed is included below for reference.

This specification requirement has been in the VTM LMD Code for many years. Its purpose is to prevent a second party from being charged for product delivered to the first party. However, there is no requirement for interlocks in the LPG and Anhydrous Ammonia LMD Code, other than the requirement added in 2016 for stationary retail motor-fuel devices. Currently, the only protection is provided by two user requirements, paragraphs UR.2.5. Ticket in Printing Device, which prohibits the "riding of tickets" (having a ticket in the printer while the vehicle is moving from one location to another) and paragraph UR.2.1. Return of Indication and Recording Element to Zero, which requires the indications to be set to zero before a delivery. Both requirements are extremely difficult, if not impossible to enforce, where printers are frequently mounted in the cab of the vehicle and are not visible to an observer outside the vehicle. In addition, electronic registers used in stationary applications should not be exempt from this requirement due to the possibility of a second party being charged for product delivered to the first party in this scenario.

This requirement for electronic indicators already exists in the VTM Code and since most electronic registers are used in both applications (stationary and nonstationary), there should not be any objections for adding this requirement to the LPG and Anhydrous Ammonia Liquid-Measuring Devices Code.

Refer to the Committee's 2018 Final Report to view the various comments received and actions taken by the Committee on this item.

At the 2019 NCWM Interim Meeting, Mr. Ken Ramsburg (Maryland), submitter of this item, commented on the analysis from NIST OWM and stated that this item is to help align the requirements in the VTM and LPG and Anhydrous Ammonia LMD Codes for interlocks. Based on comments he had received, he proposed changing the time limit specified in the requirement from 3 minutes to 2 minutes and changing the effective date of the requirement.

OWM personnel were unable to attend the 2019 NCWM Interim Meeting due to the Federal Government shutdown in early 2019 due to a lack of appropriations. However, OWM provided written comments to the Committee on this item in advance of the meeting including the following:

- OWM agrees with the submitter that changes are needed in the LPG Code to address requirements for zero-set-back interlock requirements and align those requirements with other measuring codes.

- OWM recommends the addition of a specific nonretroactive date to allow manufacturers to consider the proposed timeline for implementation and, based on consultation with the submitter, recommends a date of 2021.

- As with the VTM Code paragraph on which the proposal was patterned, OWM notes the proposed requirement includes requirements to address both zero-set-back interlock and time-out features in a single paragraph.

- OWM notes a paragraph was added to the LMD Code in 2016 to include a provision for an automatic timeout on "pay-at-pump" retail motor fuel dispensers where payment is rendered via a card at the dispenser. A corresponding paragraph was not added to the LPG code to address LPG retail motor-fuel dispensers. The proposal should include language to mirror the corresponding LMD requirement for RMFDs.

This publication is available free of charge from: https://doi.org/10.6028/NIST.SP.1253

This publication is available free of charge from: https://doi.org/10.6028/NIST.SP.1253

- Unlike the VTM Code and the LMD Code, the LPG & NH3 Code addresses both vehicle-mounted and stationary devices.

- In considering comments from CWMA and SWMA regarding the time-out limit, OWM notes a time out-limit of three minutes aligns with the current VTM Code, while a two-minute time-out limit aligns with the current LMD Code for stationary devices.

- OWM does not believe the current proposal should be delayed and recommended the Committee proceed with the current proposal as it sees fit. However, OWM also believes the requirements for zero-set-back interlock and time-out features need to be reformatted for clarity and consistency with other codes. Consequently, OWM recommends as a future item the following proposal to align corresponding requirements for stationary RMFDs and other stationary devices and vehicle-mounted applications with the LMD and VTM Codes. This proposal would address the zero-set-back interlock and timeout requirements in separate paragraphs as shown below. OWM would appreciate input and comments on this proposal to help better craft that future proposal. (Note this recommendation includes language for zero-set-back interlock requirements for stationary RMFDs which is already included in H44 as paragraph S.2.5. and is nonretroactive as of 2017.)

S.2.5. Zero-Set-Back Interlock.

S.2.5.1. Zero-Set-Back Interlock, Stationary (Other than Stationary Retail Motor-Fuel Dispensers) and Vehicle-Mounted Meters, Electronic. - A device shall be so constructed that after an individual delivery or multiple deliveries at one location have been completed, an automatic interlock system shall engage to prevent a subsequent delivery until the indicating and, if equipped, recording elements have been returned to their zero position.
[Nonretroactive as of 2021]
(Added 2019)

S.2.5.2. ***Zero-Set-Back Interlock for Stationary Retail Motor-Fuel Devices.*** *– A device shall be constructed so that:*

(a) after a delivery cycle has been completed by moving the starting lever to any position that shuts off the device, an automatic interlock prevents a subsequent delivery until the indicating elements and recording elements, if the device is equipped and activated to record, have been returned to their zero positions;

(b) the discharge nozzle cannot be returned to its designed hanging position (that is, any position where the tip of the nozzle is placed in its designed receptacle and the lock can be inserted) until the starting lever is in its designed shut-off position and the zero-set-back interlock has been engaged; and

(c) in a system with more than one dispenser supplied by a single pump, an effective automatic control valve in each dispenser prevents product from being delivered until the indicating elements on that dispenser are in a correct zero position.

[Nonretroactive as of January 1, 2017]

(Added 2016)

S.2.6. Automatic Timeout.

S.2.6.1. Stationary (Other than Stationary Retail Motor-Fuel Dispensers) and Vehicle-Mounted Meters, Electronic. For individual deliveries, if there is no product flow for three minutes the

transaction must be completed before additional product flow is allowed. The 3-minute timeout shall be a sealable feature on of an indicator.
[Nonretroactive as of 2021]
(Added 20XX)

S.2.6.2. Automatic Timeout Pay-at-Pump Retail Motor-Fuel Devices. – Once a device has been authorized, it must de-authorize within two minutes if not activated. Re-authorization of the device must be performed before any product can be dispensed. If the time limit to de-authorize the device is programmable, it shall not accept an entry greater than two minutes.
[Nonretroactive as of 2021]
(Added 20XX)

During the Committee's work session at the 2019 NCWM Interim Meeting, the members of the Committee agreed to amend the proposal by adding a nonretroactive effective date of 2021 and change the time-out limit from three minutes to two minutes as recommended by the submitter and others. With these changes members of the committee agreed the item was fully developed and agreed to assign a Voting status as shown in the Item Under Consideration.

At the 2019 NCWM Annual Meeting, comments were received during open hearings. Mr. Dmitri Karimov (Liquid Controls), speaking on behalf of MMA, reported that the MMA supports OWM suggestions for splitting the paragraphs for zero-set back interlock and automatic timeout and also noted that a three minute time out is needed for LPG to align with the VTM Code and two minutes should apply to retail. Mrs. Tina Butcher (NIST OWM) noted that the NIST proposal to split the paragraphs would add clarity but supports moving the proposal forward as is and putting forward additional changes during the next NCWM cycle.

During the Committee's work session, the Committee agreed to present the item for vote with no additional changes.

Regional Association Comments:
At the WWMA: 2018 fall Annual Meeting, they heard no comments on this item during its open hearings. During its work session, the WWMA S&T Committee questioned whether equipment is available to meet this requirement in stationary applications. While it is appropriate to apply this requirement to electronic vehicle-mounted systems as is done in the Vehicle-Tank Meters Code, the WWMA questions the impact on stationary devices currently in the field and believes the reference to "stationary" should be struck. The WWMA reported it believes additional input and possible modification is needed before recommending this item for Voting. Consequently, the WWMA recommended this item be designated as Developing item.

At the NEWMA 2018 fall Interim Meeting, the Committee heard no comments during open hearings. Hearing no opposition or discussion on this item, NEWMA believes this item is fully developed and recommended this as a Voting item.

At the NEWMA 2019 spring Annual Meeting, no comments were heard during the open hearing. The Committee recommends this as a Voting item on the NCWM S&T Committee agenda.

At the SWMA 2018 fall Annual Meeting, the submitter requested this be a Voting item. A representative from the State of Arkansas stated he would like to see the time-out limit set to two minutes rather than 3 minutes to be in harmony with other codes. The submitter agreed to that change. The SWMA recommended this as a Voting item with the time-out limit changed from three minutes to two minutes.

At the CWMA 2018 fall Interim Meeting, the Committee heard no comments during open hearings. The CWMA recommended this as a Developing item with clarification of the reasoning of the three-minute time-out versus the two-minute.

At the CWMA 2019 spring Annual Meeting, the Committee heard no comments during open hearings. The CWMA recommended that this as a Voting item.

This publication is available free of charge from: https://doi.org/10.6028/NIST.SP.1253

Additional letters, presentations, and data may have been part of the Committee's consideration and were posted on the NCWM website during the time this item was on the Committee's agenda. To the extent possible, comments and positions from such documents have been summarized in the Committee's report along with comments heard during the Committee's hearings.

MFM – MASS FLOW METERS

MFM-2 V S.1.3.3. Maximum Value of Quantity-Value divisions.

(This item was Adopted.)

Source:
NIST OWM (2019)

Purpose:
Delete the reference to "gasoline liter equivalent (GLE)" since that term that was removed from all Mass Flow Meters Code requirements in 2016 and clarify and limit the maximum value of the quantity division for indicated and recorded deliveries in the diesel gallon equivalent (DGE) to an increment of 0.001.

Item Under Consideration:
Amend NIST Handbook 44 Mass Flow Meters Code as follows:

S.1.3.3. Maximum Value of Quantity-Value Divisions.

~~**(a) The maximum value of the quantity-value division for liquids shall not be greater than 0.2 % of the minimum measured quantity.**~~

~~**(b) For dispensers of compressed natural gas used to refuel vehicles, the value of the division for the gasoline liter equivalent shall not exceed 0.01 GLE; the division for gasoline gallon equivalent (GGE) shall not exceed 0.001 GGE. The maximum value of the mass division shall not exceed 0.001 kg or 0.001 lb.**~~

~~**(Amended 1994)**~~

<u>The maximum value of the quantity-value division shall not exceed the following.</u>

<u>(a) For compressed natural gas dispensed as an engine fuel:</u>

<u>(1) 0.001 for gasoline gallon equivalent (GGE) units; or</u>

<u>(2) 0.001 diesel gallon equivalent (DGE) units; or</u>

<u>(3) 0.001 kg or 0.001 lb for mass units.</u>

<u>(b) For liquefied natural gas dispensed as an engine fuel:</u>

<u>(1) 0.001 for diesel gallon equivalent (DGE) units; or</u>

<u>(2) 0.001 kg or 0.001 lb for mass units.</u>

This publication is available free of charge from: https://doi.org/10.6028/NIST.SP.1253

This publication is available free of charge from: https://doi.org/10.6028/NIST.SP.1253

(c) For all liquids other than liquefied natural gas dispensed as an engine fuel a maximum value not greater than 0.2 % of the minimum measured quantity.

(Amended 1994 **and 2019**)

Background/Discussion:
In 2016, the NCWM concluded three years of discussions about NIST HB 44 Mass Flow Meters Code applications that address the sale of natural gas as a vehicle fuel. At that time, the NCWM agreed to eliminate the unit of "gasoline liter equivalent (GLE)". Although the GLE was removed from paragraphs S.1.3.1.1. Compressed Natural Gas Used as an Engine Fuel and S.5.2. Marking of Gasoline Volume Equivalent Conversion Factor, the unit was inadvertently overlooked for removal from paragraph S.1.3.3.(b) Maximum Value of Quantity-Value Divisions.

Also, in 2016, the NCWM agreed to recognize mass, a *new* unit of measurement the diesel gallon equivalent (DGE); and sales of the commodity "liquefied natural gas" (LNG) for indicated deliveries. The DGE is an approximate volume unit derived from the energy content of a gallon of diesel fuel. Unlike all other vehicle fuel quantity units in NIST HB 44, no requirement was published establishing a suitable limit on the maximum division value for indicated or recorded deliveries of CNG and LNG in DGE units. The maximum quantity value division is prescribed for retail vehicle fuel deliveries in units of the gallon, the kilogram or pound, as well as the gasoline gallon equivalent or GGE (i.e., in increments not greater than 0.001) in NIST HB 44. The factor specified for converting LNG and CNG mass to volume equivalent units is fixed and assigned a numerical value out to three decimal places.

A 0.001 increment needs to be assigned as the maximum allowable value of the DGE to avoid difficulties in calculating the total sale for each transaction. During the exhaustive deliberations and poring through countless pages documenting these discussions, an agreement on the maximum value for the DGE's quantity-value division was inadvertently overlooked. Consequently, this proposal is being submitted to clarify and limit the maximum value of the quantity division for indicated and recorded deliveries in the DGE to a 0.001 increment.

No opposing arguments have been heard at this time since both modifications to paragraph S.1.3.3.(b) are considered housekeeping items: one that removes a unit of measurement that ceased to be recognized for natural gas sales; and one that corrects the omission of a specification that specifies the maximum quantity value for the DGE as one of four measurement units recognized for natural gas vehicle fuel applications in the Mass Flow Meters Code.

NIST OWM comments were provided to the Committee in advance of the 2019 Interim Meeting and subsequently posted and made available on the NCWM website. OWM notes that all four regional weights and measures associations agreed the proposal should move forward as written for a vote in 2019.

Both proposed modifications to MFM Code paragraph S.1.3.3.(b) are, in essence, housekeeping items intended to fully address 2016 changes that were made to the code. The proposal recommends modifying S.1.3.3.(b):

1) by removing the "gasoline liter equivalent or GLE", a unit that is no longer referenced in the code; and
2) to clarify that the maximum quantity-value for natural gas fuel sales in diesel gallon equivalent (DGE) units shall not exceed an increment of 0.001. These two actions were inadvertently omitted during the extensive 2016 deliberations that resulted in modification of the MFM Code to recognize diesel gallon equivalent units.

Specifying the maximum size of the unit recognized for the sale of a commodity is: 1) consistent across the Handbook codes; 2) essential for the selection of suitable dispensing equipment; and 3) necessary to facilitate transparency in sales transactions and for making comparisons in fuel pricing. These modifications eliminate confusion, foster acceptance, and proper use of the newest noncustomary unit introduced for sales of natural gas engine fuel.

During the 2019 Interim Meeting open hearings, the Committee heard no comments on item MFM-2. The Committee agreed that this proposal is a necessary housekeeping item that removes the term "gasoline gallon equivalent" from the Mass Flow Meters Code. This is consistent with a similar action taken in 2016. Furthermore, this proposal clarifies and places a limit on the maximum value of the quantity division for indicated and recorded deliveries in the diesel gallon equivalent (DGE) to an increment of 0.001. This specification was inadvertently omitted in previous modifications of the code to recognize the DGE.

This publication is available free of charge from: https://doi.org/10.6028/NIST.SP.1253

The Committee also agreed to a reformatting of the requirement as is shown in the Item Under Consideration, believing that this revision clarifies the requirement. Consequently, the Committee recommends this item move forward as written for a vote at the July 2019 NCWM Annual Meeting.

At the 2019 NCWM Annual Meeting, the Committee heard comments from Mr. Richard Harshman (NIST OWM) indicating the proposed changes are housekeeping items to remove GLE and include DGE in other parts of the Mass Flow Meter Code. Mr. Dmitri Karimov (Liquid Controls), speaking on behalf of MMA, supported the proposed changes.

During the Committee's work session, the Committee agreed to present the item for Vote.

Regional Association Comments:
At the WWMA 2018 fall Annual Meeting, Mrs. Tina Butcher (NIST OWM) provided an overview of the item and its purpose noting its intent is to clean up some gaps in the language. Hearing no additional comments and no comments in opposition to the proposal, the WWMA recommended this item be designated as a Voting item on the NCWM S&T Committee's agenda.

At the NEWMA 2018 fall Interim Meeting, the Committee received no comments during open hearings. Hearing no opposition or discussion on this item, NEWMA believed this item is fully developed and recommended this as a Voting item. At the NEWMA 2019 spring Annual Meeting, the Committee received no comments during open hearings. NEWMA recommended this as a Voting item on the NCWM S&T Committee agenda.

At the SWMA 2018 fall Annual Meeting, a representative of NIST OWM reported the item was housekeeping in nature and recommended that it be a Voting item. The SWMA agreed and recommended it move forward for Vote.

At the CWMA 2018 fall Interim Meeting, the Committee received no comments during open hearings. The CWMA recommended this as a Voting item. At the CWMA 2019 spring Annual Meeting, the Committee received no comments during open hearings. The CWMA recommended this as a Voting item.

Additional letters, presentations, and data may have been part of the Committee's consideration and were posted on the NCWM website during the time this item was on the Committee's agenda. To the extent possible, comments and positions from such documents have been summarized in the Committee's report along with comments heard during the Committee's hearings.

MFM-4 V S.5.1. Location of Marking Information; Retail Motor-Fuel Dispensers.

(This item was Adopted.)

Source:
NIST OWM (2019)

Purpose:
Extend the provision allowing the use of a key or tool for accessing internal required markings for *liquid* retail motor-fuel dispensers to include retail motor-fuel dispensers delivering *compressed gases*.

Item Under Consideration:
Amend NIST Handbook 44 Mass Flow Meters Code as follows:

S.5.1. Location of Marking Information; Retail Motor-Fuel Dispensers. *– The marking information required in General Code, paragraph G-S.1. Identification shall appear as follows:*

(a) within 60 cm (24 in) to 150 cm (60 in) from the base of the dispenser;

(b) either internally and/or externally provided the information is permanent and easily read; and

(c) on a portion of the device that cannot be readily removed or interchanged (i.e., not on a service access panel).

Note: *The use of a dispenser key or tool to access internal marking information is permitted for retail liquid* ***and compressed gas****-measuring devices.*
[Nonretroactive as of January 1, 2003]
(Added 2006) **(Amended 2019)**

Background/Discussion:
General Code paragraph G-S.1. Identification specifies that required markings must be visible after installation. A provision in the Liquid-Measuring Devices Code provides an exception that permits the use of a dispenser key or tool to access internal marking information. This provision was extended to the LPG and Anhydrous Ammonia Liquid-Measuring Devices Code and the Mass Flow Meters (MFM) Code in 2005. However, as currently written, the corresponding paragraph in the MFM Code appears to restrict this provision to only "liquid" retail dispenser fueling applications. The intent of the proposed modification is to permit the exception to include dispensers used to deliver CNG.

While it is possible that the exception was intentionally limited to liquid fuels in the MFM Code, there is no evidence of this in the background and history. The 2005 action to extend this exception to other measuring codes was intended to align requirements for all retail vehicle fueling applications.

NIST OWM comments were provided to the Committee in advance of the 2019 Interim Meeting and subsequently posted and made available on the NCWM website. OWM is the submitter of this proposal. The proposal would extend the provisions in Mass Flow Meters (MFM) Code, paragraph S.5.1 allowing for the use of a key or tool to access marking information located inside liquid retail motor-fuel dispensers to also apply to retail motor-fuel dispensers delivering compressed gases. OWM believes it noteworthy that the four regional weights and measures associations have unanimously recommended the proposal as a voting item in 2019.

Although General Code paragraph G-S.1. Identification specifies that required markings must be visible after installation, MFM Code paragraph S.5.1 provides a device-specific exemption by permitting the use of a dispenser key or tool to access internal marking information. This exception was included in the Liquefied Petroleum Gas and Anhydrous Ammonia Liquid-Measuring Devices Code (NIST Handbook 44 Section 3.32) and the Mass Flow Meters Code (NIST Handbook 44 Section 3.37) in 2005. However, as currently written, the MFM Code paragraph appears to restrict this provision to only "liquid" retail dispenser fueling applications. The primary intent of the proposed modification to S.5.1. is to recognize the exception also applies to dispensers used to deliver CNG motor fuel.

OWM has found no information to exist that would indicate that compressed gas dispensers were to be expressly excluded from the exemption since the exception was extended in 2005 to other measuring devices codes that align requirements for all retail vehicle fueling applications.

During the 2019 Interim Meeting open hearings, the Committee heard no comments on item MFM-4. The Committee agreed that this proposal clarifies the intent of the requirement to apply not only to equipment that measures and delivers liquid fuel products, but also applies to systems used in the retail delivery of compressed gaseous fuels. Consequently, the Committee recommends this item move forward as written for a vote at the July 2019 NCWM Annual Meeting.

During the 2019 Interim Meeting, the Committee heard comments during open hearings from Mr. Harshman indicating that the proposed changes are housekeeping issues to ensure officials do not misinterpret the application of paragraph S.5.1 to mean it was not intended to apply to mass flow meters. During the S&T Committee's work session, the Committee agreed to present the item for vote.

Regional Association Comments:
At the WWMA 2018 fall Annual Meeting, Mrs. Butcher provided an overview of the item, noting its intent is to extend the requirement, which presently only addresses liquids to include compressed gas dispensers. Hearing no additional

This publication is available free of charge from: https://doi.org/10.6028/NIST.SP.1253

comments and no comments in opposition to the proposal, the WWMA recommended this item be designated as a Voting item on the NCWM S&T Committee's agenda.

At the NEWMA 2018 fall Interim Meeting, no comments were heard during the open hearings. Hearing no opposition or discussion on this item, NEWMA believed this item is fully developed and recommended this as a Voting item

At the NEWMA 2019 spring Annual Meeting, no comments were heard during the Committee open hearing. NEWMA recommended this as a Voting item.

At the SWMA 2018 fall Annual Meeting, a representative of NIST OWM reported the item was housekeeping in nature and is ready for vote. SWMA agreed the item is ready to move forward as a Voting item.

At the CWMA 2018 fall Interim Meeting, no comments were heard during the Committee's open hearings. The CWMA recommended this as a Voting item.

At the CWMA 2019 spring Annual Meeting, no comments were heard during the Committee's open hearings. The CWMA recommended that this as a Voting item.

Additional letters, presentations, and data may have been part of the Committee's consideration and were posted on the NCWM website during the time this item was on the Committee's agenda. To the extent possible, comments and positions from such documents have been summarized in the Committee's report along with comments heard during the Committee's hearings.

HGM – HYDROGEN GAS-MEASURING DEVICES

HGM-6 V Tentative Code Status and Preamble., A.2.(c) Exceptions., N.2 Test Medium., N.3. Test Drafts., N.4.1. Master Meter (Transfer) Standard Test., N.4.2. Gravimetric Tests., N.4.3 PVT Pressure Volume Temperature Test., N.6.1.1. Repeatability Tests., T.3. Repeatability., T.6. Tolerance –Minimum Measured Quantity (MMQ). and Appendix D. Definitions where applicable.

(This item was Adopted.)

Source:
California (2019)

Purpose:
Remove the tentative status and include amendments to support current dispenser and test equipment capabilities.

Item Under Consideration:
Amend NIST Handbook 44, Hydrogen Gas-Measuring Devices Tentative Code follows:

Section 3.39. Hydrogen Gas-Measuring Devices ~~– Tentative Code~~

~~**This tentative code has trial or experimental status and is not intended to be enforced. The requirements are designed for study prior to the development and adoption of a final code. Requirements that apply to wholesale applications are under study and development by the U.S. National Working Group for the Development of Commercial Hydrogen Measurement Standards. Officials wanting to conduct an official examination of a device or system are advised to see paragraph G-A.3. Special and Unclassified Equipment.0**~~
~~**(Tentative Code Added 2010)**~~

This publication is available free of charge from: https://doi.org/10.6028/NIST.SP.1253

This publication is available free of charge from: https://doi.org/10.6028/NIST.SP.1253

The status of Section 3.39. Hydrogen Gas-Measuring Devices was changed from "tentative" to "permanent" effective January 1, 2020.

(Added 2010) (Amended 2019).

…

A.2. Exceptions. -
(c) Devices used for dispensing a hydrogen gas with a hydrogen fuel index lower than 99.97 % and concentrations of specified impurities that exceed level limits **in the latest version of SAE International J2719.**

…

N.2. Test Medium. – The device shall be tested with the product commercially measured except that, in a type evaluation examination, hydrogen gas as specified in NIST Handbook 130 shall be used.
~~**Note: Corresponding requirements are under development and this paragraph will be revisited.**~~

N.3. Test Drafts. –The minimum test shall be one test draft at **twice** the declared minimum measured quantity and one test draft at approximately ~~**ten**~~ **five** times the minimum measured quantity or ~~**1**~~ **4** kg, whichever is greater. More tests may be performed over the range of normal quantities dispensed. (See T.3. Repeatability)

The test draft shall be made at flows representative of that during normal delivery. The pressure drop between the dispenser and the proving system shall not be greater than that for normal deliveries. The control of the flow (e.g., pipework or valve(s) size, etc.) shall be such that the flow of the measuring system is maintained within the range specified by the manufacturer.

N.4. Tests.

N.4.1. Master Meter (Transfer) Standard Test. –When comparing a measuring system with a calibrated transfer standard, the minimum test shall be one test draft at the declared minimum measured quantity and one test draft at approximately ten times the minimum measured quantity or 1 kg, whichever is greater. More tests may be performed over the range of normal quantities dispensed.

N.4.1.1. Verification of Master Metering Systems. – A master metering system used to verify a hydrogen gas-measuring device shall be verified before and after the verification process. A master metering system used to calibrate a hydrogen gas-measuring device shall be verified before starting the calibration and after the calibration process.

N.4.~~2~~1. Gravimetric Tests. – The weight of the test drafts shall be equal to at least **twice** the amount delivered by the device at the declared minimum measured quantity and one test draft at approximately ~~**ten**~~ **five** times the minimum measured quantity or ~~**1**~~ **4** kg, whichever is greater. More tests may be performed over the range of normal quantities dispensed

N.4.~~3~~2 PVT Pressure Volume Temperature Test. – The minimum test with a calibrated volumetric standard shall be one test draft at **twice** the declared minimum measured quantity and one test draft at approximately ~~**ten**~~ **five** times the minimum measured quantity or ~~**1**~~ **4** kg, whichever is greater. More tests may be performed over the range of normal quantities dispensed.

…

N.6.1.1. Repeatability Tests. –Tests for repeatability should include a minimum of three consecutive test drafts of approximately the same size and be conducted under controlled conditions where variations in factors are reduced to minimize the effect on the results obtained.

…

T.3. Repeatability. – When multiple tests are conducted at approximately the same flow rate and draft size the range of the test results for the flow rate shall not exceed 40 % of the absolute value of the maintenance tolerance and the results of each test shall be within the applicable tolerance. (Also see N.6.1.1. Repeatability Tests.)

…

And

Appendix D. Definitions

configuration parameter. – Any adjustable or selectable parameter for a device feature that can affect the accuracy of a transaction or can significantly increase the potential for fraudulent use of the device and, due to its nature, needs to be updated only during device installation or upon replacement of a component, e.g., division value (increment), sensor range, and units of measurement. [2.20, 2.21, 2.24, 3.30, 3.37, **3.39,** 5.56(a)]

equipment, commercial. – Weights, measures, and weighing and measuring devices, instruments, elements, and systems or portion thereof, used or employed in establishing the measurement or in computing any basic charge or payment for services rendered on the basis of weight or measure. As used in this definition, measurement includes the determination of size, quantity, value, extent, area, composition (limited to meat and poultry), constituent value (for grain), or measurement of quantities, things, produce, or articles for distribution or consumption, purchased, offered, or submitted for sale, hire, or award. [1.10, 2.20, 2.21, 2.22, 2.24, 3.30, 3.31, 3.32, 3.33, 3.34, 3.35, 3.38, **3.39,** 4.40, 5.51, 5.56.(a), 5.56.(b), 5.57, 5.58, 5.59]

unit price. – The price at which the product is being sold and expressed in whole units of measurement. [1.10, 3.30, **3.39**] (Note: The Specifications and Tolerances Committee may wish to check other code sections to add for reference to this definition.)

Editor's Instructions:

(A) Take all the definitions from the 3.39. Hydrogen Gas-Measuring Devices – Tentative Code and replace the current definitions in NIST HB 44 Appendix D. Definitions, and

(B) *Add 3.39 to these definitions in NIST HB 44 Appendix D. Definitions*.

Background/Discussion:

NIST Handbook (HB) 44 Section 3.39 Hydrogen Gas-Measuring Devices – Tentative Code, was adopted by NCWM in 2010 and first published in 2011, with only a trial and experimental status. Since 2012, the California Division of Measurement Standards (CA DMS) has conducted five successful type evaluations of hydrogen dispensers, and California state and county officials have performed initial verifications and/or annual examinations of dispensers at the 36 retail stations throughout the state. In 2016, changes were made to HB 44 Section 3.39 to expand the device tolerances from 1.5 % and 2.0 % to 5.0 % and 7.0 %, based upon CA DMS' test data. Today, CA DMS believes the Code with the adoption of the proposed amendments is ready for permanent status. There are other jurisdictions that have hydrogen dispensers with the potential for commercial operation, most notably in the U.S. northeast (CT, MA, NJ, NY, RI) where industry is supporting the development of a "hydrogen highway." Additionally, NIST HB 44 Section 3.39 is generally compatible with the 2018 version of the corresponding international standard, OIML R 139 - *Compressed gaseous fuel measuring systems for vehicles.*

The following are specific justifications for the eleven proposed amendments to Section 3.39. Hydrogen Gas-Measuring Devices - Tentative Code:

(1) Section 3.39. Hydrogen Gas-Measuring Devices - Tentative Code

CA DMS proposes that this title be removed and replaced with Section 3.39. Hydrogen Gas-Measuring Devices without the words "Tentative Code." This change is necessary because a tentative code has only trial or experimental status and is not enforceable. Removal of these words will make clear that NIST HB 44 Section 3.39 is the basis of enforcement for hydrogen gas-measuring devices in the U.S. Additionally, CA DMS proposes to remove the preamble as it would be unnecessary in a code with permanent status.

This publication is available free of charge from: https://doi.org/10.6028/NIST.SP.1253

This publication is available free of charge from: https://doi.org/10.6028/NIST.SP.1253

(2) 3.39. Hydrogen Gas-Measuring Devices. A.2. Exceptions (c)

CA DMS proposes that this requirement be amended. Current text is not specific as to what is meant by the "concentrations of specified impurities that exceed level limits." This is because at the time the tentative code was drafted, limits for certain constituents had not been finalized and there wasn't a recognized national fuel quality standard for hydrogen fuel. Since then, SAE International has approved and published a specification for hydrogen for use in fuel cell vehicles, SAE J2719. (Note: This SAE standard is also codified in NIST HB 130, G. Uniform Fuels and Automotive Lubricants Regulation, paragraph 2.20. Hydrogen Fuel.)

(3) N.2 Test Medium.

CA DMS proposes that the Note be deleted. In NIST HB 130, G. Uniform Fuels and Automotive Lubricants Regulation, SAE International J2719 is referenced in paragraph 2.17. Hydrogen Fuel. This fuel quality specification was first published in 2011, after Section 3.39. Hydrogen Gas-Measuring Devices - Tentative Code was adopted by NCWM.

(4) N.3. Test Drafts.

CA DMS proposes that this be amended to increase the size for the minimum test draft used when verifying that a hydrogen gas-measuring device meets the minimum tolerances and specifications. The test draft size in HB 44 is too small and creates increased measurement uncertainty. The proposed minimum test draft size also aligns with OIML R 139 - *Compressed gaseous fuel measuring systems for vehicles*. The second draft test size reduction to five times the minimum measured quantity from ten times accommodates the physical limitations of hydrogen dispenser testing equipment (currently less than 5.0 kg. but greater than 4.0 kg).

(5) N.4.1. Master Meter (Transfer) Standard Test.

CA DMS proposes that this be amended to increase the size for the minimum test draft used when verifying that a hydrogen gas-measuring device meets the minimum tolerances and specifications. The test draft size in HB 44 is too small and creates increased measurement uncertainty. The proposed minimum test draft size also aligns with OIML R 139 - *Compressed gaseous fuel measuring systems for vehicles*. The second draft test size reduction to five times the minimum measured quantity from ten times accommodates the physical limitations of hydrogen dispenser testing equipment (currently less than 5.0 kg. but greater than 4.0 kg).

(6) N.4.2. Gravimetric Tests.

CA DMS proposes that this be amended to increase the size for the minimum test draft used when verifying that a hydrogen gas-measuring device meets the minimum tolerances and specifications. The test draft size in HB 44 is too small and creates increased measurement uncertainty. The proposed minimum test draft size also aligns with OIML R 139 - *Compressed gaseous fuel measuring systems for vehicles.* The second draft test size reduction to five times the minimum measured quantity from ten times accommodates the physical limitations of hydrogen dispenser testing equipment (currently less than 5.0 kg. but greater than 4.0 kg).

(7) N.4.3. PVT Pressure Volume Temperature Test.

CA DMS proposes that this be amended to increase the size for the minimum test draft used when verifying that a hydrogen gas-measuring device meets the minimum tolerances and specifications. The test draft size in NIST HB 44 is too small and creates increased measurement uncertainty. The proposed minimum test draft size also aligns with OIML R 139 - *Compressed gaseous fuel measuring systems for vehicles*. The second draft test size reduction to five times the minimum measured quantity from ten times accommodates the physical limitations of hydrogen dispenser testing equipment (currently less than 5.0 kg. but greater than 4.0 kg).

(8) N.6.1.1. Repeatability Tests.

CA DMS proposes that this paragraph be amended to specify the size of the test draft used when verifying a hydrogen dispenser. If the proposed test draft size is too small, it will not be possible to get a measurement that is both reliable and repeatable. Also, if the test draft size is too small, it is difficult to verify compliance using the equipment presently available to officials and service agencies that inspect and/or repair these devices.

(9) T.3. Repeatability.

CA DMS proposes that this paragraph be amended. This section references paragraphN.6.1.1. which specifies that the test drafts be of approximately the same size, but it has no requirement for the minimum weight of the test draft. The test draft size must be sufficiently large to obtain a measurement that is both reliable and repeatable. If the test draft size is too small, it is difficult to verify compliance using the equipment presently available to officials and service agencies that repair hydrogen gas-measuring devices. This proposed tolerance also aligns with the OIML R 139 - *Compressed gaseous fuel measuring systems for vehicles*.

(10) T.6. Tolerance – Minimum Measured Quantity (MMQ).

CA DMS proposes that this paragraph be added. It is necessary to adopt a different tolerance for the minimum measured quantity because the test draft size in NIST HB 44 Section 3.39. is so small that it creates increased measurement uncertainty. Increasing the tolerance also eliminates the need for more precise testing equipment. This proposed tolerance also aligns with OIML R 139 - *Compressed gaseous fuel measuring systems for vehicles*.

(11) Appendix D. Definitions

When the tentative code is upgraded to a permanent status, the definitions listed at the end of the tentative code should be deleted and added to NIST HB 44 Appendix D. Definitions, to reference Section "3.39" where applicable. In addition to the definitions listed in the tentative code, the following terms should also have "3.39" added: configuration parameter, commercial equipment, and unit price.

NIST OWM: OWM comments were provided to the Committee in advance of the 2019 Interim Meeting and subsequently made available on the NCWM website. OWM offered the following points for consideration.

- NIST OWM concurs with a majority of the recommended modifications to the current NIST Handbook 44, Section 3.39 Hydrogen Gas-Measuring Devices-Tentative Code.
- OWM believes the proposal to upgrade the code's status should not be delayed because it is urgently needed to support the growing infrastructure for hydrogen. However, prior to voting on the proposed changes to the current HB 44 Hydrogen Code, a consensus needs to be reached on 2 key technical issues:
  - Repeatability
    - N.6.1.1. Repeatability Test
    - T.3. Repeatability
  - Inconsistent application of MMQ tolerances.
    - New T.6 Tolerance – on Minimum Measured Quantity (MMQ)

  The proposed change to these paragraphs would limit repeatability test drafts to not less than 1000 increments of the device under test. This is more than the MMQ for these devices and the MMQ is a point at which these devices would be commonly used.
- The submitter referenced OIML R 139 as the source of this proposed change. NIST OWM is seeking further clarification from the Co-Conveners of OIML R 139 if a repeatability test is permissible at the MMQ.
- OWM plans to continue its collaborations with the submitter with the goal of resolving these points prior to the Spring regional meetings if not before.

Additional OWM provided background information:
As proposed the test notes might imply repeatability tests by evaluators and officials are to be conducted at quantities in excess of fuel tank top-off amounts and the typical minimum measurement that can be accurately delivered by the dispenser and where that amount is a required marking on the dispenser's identification plate since 2010.

It seems reasonable to not reinvent the standard and frequently the U.S. has drawn on international standards and the states for procedures already developed and supported by test data. In fact, in 2018 the international community updated OIML R 139 to address many compressed gas dispenser features specific to the hydrogen application.

This publication is available free of charge from: https://doi.org/10.6028/NIST.SP.1253

This publication is available free of charge from: https://doi.org/10.6028/NIST.SP.1253

Proper tests are made with equipment provided by either the official or in some cases the owner/operator of the device and are of the proper design that meet the NIST Handbook 44 Fundamental Considerations guidelines for a test apparatus. Hydrogen station inspections are carefully orchestrated.

The U.S. did not adopt every aspect of the international term MMQ. Suitable equipment was part of the 1991 S&T Committees discussions. The MMQ is one method for determining if a device is suitable for use in a given application. The device may not be used to measure quantities smaller than the MMQ; this is comparable to the minimum load that may be weighed on a scale. The Committee did consider a proposed set of criteria for use to establish the suitability of liquid measuring devices, where the accuracy test tolerance for deliveries at the MMQ was twice the tolerance applied for a normal delivery. At that point in time tolerances ranged from 0.25 % to 1.0 %. Given the allowable errors proposed in new paragraph T.6. Tolerances MMQ, thus doubling the current acceptance and maintenance tolerances of 5.0 % and 7.0 % would permit significant errors for deliveries of small quantities.

The test notes in the current edition of the hydrogen code specify, at minimum, one accuracy test at the minimum measured quantity (MMQ) and one additional test at whichever is the greater amount either a delivery at ten times the MMQ or 1 kilogram. These test drafts are applicable to all three test methods recognized by the code. The proposed modification would require all repeatability tests regardless of the test method to be conducted at a minimum delivery of 1 kilogram. OWM has observed that hydrogen gas dispensers in operation are rated with a 500 gram MMQ (i.e., 500 scale intervals), a test draft size which would not meet the minimum quantity of 1000 scale intervals being proposed in multiple test notes that apply to the official repeatability tests of the dispenser.

The MMQ is the smallest quantity the device is designed to measure and is established by the manufacturer. The U.S. sources of hydrogen dispenser test data are increasing. The data available appears to confirm hydrogen dispensers meet the tolerance for MMQ deliveries. It appears OIML R 139 also recognizes an accuracy test at the MMQ delivery.

As a result of the NIST OWM analysis of the latest published OIML R 139 -1 paragraph 5.4.1; Repeatability which appears to require that the amount of fuel dispensed for a repeatability test must be equal to or greater than 1000 scale intervals. We have worked two examples provided below for both compressed natural gas (CNG) and hydrogen. Paragraph 5.4.1 works for U.S. CNG dispensers that typically have an MMQ of 2.0 pounds (approximately 0.900 kg), but U.S. hydrogen gas dispensers typically have a 500 gram MMQ that does not meet the repeatability test quantity requirement.

IN THE U.S.
IN THE CASE OF A COMPRESSED NATURAL GAS (CNG) REFUELING DISPENSER:

> Compressed natural gas dispensers indicate a delivery for test purposes in a 0.001 pound unit of measure.
> Applying OIML R 139-1, 5.4.1 to these CNG dispensers 1 000 x 0.001 pound = 1.0 pound
>
> This means each delivery quantity is never less than 1.0 pound (or 0.4535147 kilogram) when conducting a repeatability test.
> Most U.S. CNG dispenser manufacturers declare an MMQ of 2.0 pounds (i.e., 2 000 scale intervals)
>
> A delivery amount at the MMQ of 2.0 pounds satisfies the requirement in 5.4.1 for a delivered quantity of 1.0 pound or greater

IN THE U.S.
IN THE CASE OF A HYDROGEN GAS REFUELING DISPENSER:

> Hydrogen gas dispensers indicate a delivery in a 0.001 kilogram unit of measure.
>
> Applying OIML R 139-1, 5.4.1 to these hydrogen gas dispensers 1 000 x 0.001 kilogram = 1.0 kilogram
>
> This means each delivery is never less than 1.0 kilogram when conducting a repeatability test.

Most U.S. hydrogen gas dispenser manufacturers declare an MMQ of 500 grams (or 0.5 kilogram [i.e., 500 scale intervals])

A delivery amount at the MMQ of 0.5 kilogram does not satisfy the requirement in 5.4.1 for a delivered quantity of 1.0 kilogram or greater

During the 2019 NCWM Interim Meeting, the Committee heard from Mr. Kevin Schnepp (California) that California has been using this tentative code and feels it is ready to go forward with some modification as a voting item. Mr. Michael Keilty (Endress + Hauser Flowtec) voiced his support for the item; however, he felt it inappropriate to include information on master meter testing based on ongoing discussions about 2019 S&T Agenda Block 1 Items and Block 2 Items. These blocks of items are proposals intended to establish the appropriate nomenclature for use to identify and define test apparatus when this equipment is referenced in the codes.

During the Committee's work session, the members of the committee agreed with Mr. Keilty's suggestion to remove paragraphs 4.1 and 4.1.1 and renumber the remaining paragraphs. This action removes the master meter standard test method from the Code. For clarity, the Committee also removed text with strike through editorial marks that remained in the proposal since this alternate text only illustrated wording once considered by the WWMA, but never intended for national consideration. With this agreement, the Committee agreed to move the item forward as Voting.

During the 2019 NCWM Annual Meeting, comments were received during the S&T Committee open hearings. Mr. Kevin Schnepp commented that California has been testing these device for years and believes this tentative code is ready to use as a permanent code. Mrs. Tina Butcher (NIST, OWM) commented that OWM agrees with moving the proposal forward to modify and update the status of NIST HB 44 HGM to a permanent status with the following exceptions which are included in the NIST OWM's analysis:

- Make no modification to the Hydrogen Code to remove paragraph N.4.1 and N. 4.1.1 Verification of Master Meter Systems.

- Make no change to the requirements for Repeatability Tests for Small Deliveries at the Minimum Measured Quantity (MMQ) Delivery in Hydrogen Code Paragraphs N.6.1.1. Repeatability Tests and T.3. Repeatability.

- Data has shown it is excessive and unnecessary to double the tolerance for small deliveries at the Minimum Measured Quantity (MMQ) from ± 5 % Acceptance and ± 7 % Maintenance Tolerance to ± 10 % Acceptance and ± 14 % Maintenance Tolerance as specified in new paragraph T.6. Tolerance – on Minimum Measured Quantity (MMQ).

In consideration of the comments and recommendations received on this item during the Committee's 2019 Annual Meeting open hearings the committee agreed during its committee work session to:

1. Retain N.4.1. and N.4.1.1.

N.4. Tests.

N.4.1. Master Meter (Transfer) Standard Test. – When comparing a measuring system with a calibrated transfer standard, the minimum test shall be one test draft at the declared minimum measured quantity and one test draft at approximately ten times the minimum measured quantity or 1 kg, whichever is greater. More tests may be performed over the range of normal quantities dispensed.

N.4.1.1. Verification of Master Metering Systems. – A master metering system used to verify a hydrogen gas-measuring device shall be verified before and after the verification process. A master

This publication is available free of charge from: https://doi.org/10.6028/NIST.SP.1253

This publication is available free of charge from: https://doi.org/10.6028/NIST.SP.1253

metering system used to calibrate a hydrogen gas-measuring device shall be verified before starting the calibration and after the calibration process.

2. Eliminate the proposed addition of "**with a minimum of 1000 divisions**," to paragraph N.6.1.1. and the proposed addition of "**greater than 1000 divisions**" to paragraph T.3.

   N.6.1.1. Repeatability Tests. –Tests for repeatability should include a minimum of three consecutive test drafts of approximately the same size and be conducted under controlled conditions where variations in factors are reduced to minimize the effect on the results obtained.

   …

   T.3. Repeatability. – When multiple tests are conducted at approximately the same flow rate and draft size the range of the test results for the flow rate shall not exceed 40 % of the absolute value of the maintenance tolerance and the results of each test shall be within the applicable tolerance. (Also see N.6.1.1. Repeatability Tests.)

3. Not to add new paragraph T.6. as proposed.

The Committee agreed to present the item for vote as shown in Item Under Consideration.

Regional Association Comments:

WWMA: 2018 fall Annual Meeting. During the WWMA meeting, NIST OWM and California Dept. of Food and Agriculture - Division of Measurement Standards (CADMS) collaborated on OWM's open hearing comments and brought back a revised recommendation for WWMA to consider. OWM believes the additional modifications are appropriate, though some questions remain about the proposed 1000-division draft size for repeatability. OWM is confident that, with additional input and discussion from the community, *this point can be resolved without delaying action on this proposal*. Thus, rather than delay progress on upgrading this code, OWM believes it appropriate and expedient to move the item forward for a vote and, should an alternative solution present itself between now and the 2019 Interim Meeting as a result of collaboration between California and OWM (along with any other input received) that alternative could be presented to the NCWM S&T Committee at that time.

WWMA considered the comments received and acknowledged the points raised by Michael Keilty (Endress + Hauser Flowtec) regarding the references to "transfer standards" in the current code. The WWMA noted these references have been in the code since its inception and are presently in multiple other codes including the Cryogenic LMD Code, Carbon Dioxide LMD Code, EVSE Code, and others. The proposals referenced in Blocks 1 and 2; Gen-4; LPG-3; and MFM-5 (which the WWMA has recommended grouping together) have raised the question of the appropriateness of the terminology of the test equipment used in this item. However, those proposals do not currently recommend removing the paragraphs using that terminology from those codes. Should the work in that grouped item result in recommended changes to those references, the WWMA would expect that such recommendations would apply universally to all those codes, including the Hydrogen Gas-Measuring Devices Code. The WWMA did not feel it would be appropriate to single out this Code in advance of such recommendations.

Mr. Keilty also questioned the inclusion of the Pressure-Volume-Temperature method in the testing criteria, noting the USNWG on Hydrogen had specifically opposed this method. Ms. Tina Butcher confirmed the USNWG had raised questions about the PVT method, but the concern was not related to the test method; the concern was regarding the use of this method for the determination of the commercial quantity because of the practicality of validating the volume of the receiving container. The reference to the use of PVT solely as a test method was included in the Code based on recommendations of the USNWG.

The WWMA agreed that the code is ready to upgrade to a permanent status with the revisions proposed by CA in the WWMA's 2018 S&T Committee Agenda and the additional changes outlined in the updated version of its proposal. During the committee's work session, the members of the committee identified a term that needed clarification in paragraph N.6.1.1. Repeatability Tests and T.3. Repeatability. A summary of the changes proposed to the Code are

shown below, including that change made by the WWMA. The WWMA recommends this item be forwarded to the NCWM S&T Committee with these changes and designated as a Voting item on the NCWM S&T Committee Agenda.

Section 3.39. Hydrogen Gas-Measuring Devices ~~—Tentative Code~~

~~**This tentative code has trial or experimental status and is not intended to be enforced. The requirements are designed for study prior to the development and adoption of a final code. Requirements that apply to wholesale applications are under study and development by the U.S. National Working Group for the Development of Commercial Hydrogen Measurement Standards. Officials wanting to conduct an official examination of a device or system are advised to see paragraph G-A.3. Special and Unclassified Equipment. (Tentative Code Added 2010)**~~

The status of Section 3.39. Hydrogen Gas-Measuring Devices was changed from "tentative" to "permanent" effective January 1, 2020.

(Code Added 2010 and Upgraded 2019)

A.2. Exceptions. -

(c) Devices used for dispensing a hydrogen gas with a hydrogen fuel index lower than 99.97 % and concentrations of specified impurities that exceed level limits **in the** ~~**most current**~~ **latest version of SAE International J2719.**

N.2. Test Medium. – The device shall be tested with the product commercially measured except that, in a type evaluation examination, hydrogen gas as specified in NIST Handbook 130 shall be used.

~~**Note: Corresponding requirements are under development and this paragraph will be revisited.**~~

N.3. Test Drafts. –The minimum test shall be one test draft at **twice** the declared minimum measured quantity and one test draft at approximately ~~**ten**~~ **five** times the minimum measured quantity or ~~**1**~~ **4** kg, whichever is greater. More tests may be performed over the range of normal quantities dispensed. (See T.3. Repeatability)

The test draft shall be made at flows representative of that during normal delivery. The pressure drop between the dispenser and the proving system shall not be greater than that for normal deliveries. The control of the flow (e.g., pipework or valve(s) size, etc.) shall be such that the flow of the measuring system is maintained within the range specified by the manufacturer.

N.4.1. Master Meter (Transfer) Standard Test. –When comparing a measuring system with a calibrated transfer standard, the minimum test shall be one test draft at **twice** the declared minimum measured quantity and one test draft at approximately ~~**ten**~~ **five** times the minimum measured quantity or ~~**1**~~ **4** kg, whichever is greater. More tests may be performed over the range of normal quantities dispensed.

N.4.2. Gravimetric Tests. – The weight of the test drafts shall be equal to at least **twice** the amount delivered by the device at the declared minimum measured quantity and one test draft at approximately ~~**ten**~~ **five** times the minimum measured quantity or ~~**1**~~ **4** kg, whichever is greater. More tests may be performed over the range of normal quantities dispensed

N.4.3. PVT Pressure Volume Temperature Test. – The minimum test with a calibrated volumetric standard shall be one test draft at **twice** the declared minimum measured quantity and one test draft at approximately ~~**ten**~~ **five** times the minimum measured quantity or ~~**1**~~ **4** kg, whichever is greater. More tests may be performed over the range of normal quantities dispensed.

N.6.1.1. Repeatability Tests. – Tests for repeatability should include a minimum of three consecutive test drafts of approximately the same size **with** ~~**no less than**~~ **a minimum of 1000** ~~**scale intervals (**~~**increments on the device under test**~~**),** and be conducted under controlled conditions where variations in factors are reduced to minimize the effect on the results obtained.

This publication is available free of charge from: https://doi.org/10.6028/NIST.SP.1253

This publication is available free of charge from: https://doi.org/10.6028/NIST.SP.1253

N.7. Density. - N.7. Density. – Temperature and pressure of hydrogen gas shall be measured during the test for the determination of density or volume correction factors when applicable. For the thermophysical properties of hydrogen the following publications shall apply: for density calculations at temperatures above 255 K and pressures up to 120 MPa, a simple relationship may be used that is given in the publication of Lemmon et al., J. Res. NIST, 2008. Calculations for a wider range of conditions and additional thermophysical properties of hydrogen are available free of charge online at the "NIST Chemistry WebBook, NIST Standard Reference Database Number 69" webbook.nist.gov/chemistry, or available for purchase from NIST as the computer program NIST Standard Reference Database 23 "NIST Reference Fluid Thermodynamic and Transport Properties Database (REFPROP): Version **~~8~~ 10.0**" **https://www.nist.gov/srd/~~nist23.cfm~~refprop**. These calculations are based on the reference Leachman, J.W., Jacobsen, R.T, Lemmon, E.W., and Penoncello, S.G. "Fundamental Equations of State for Parahydrogen, Normal Hydrogen, and Orthohydrogen" to be published in the Journal of Physical and Chemical Reference Data **(~~www.nist.gov/manuscript-publication-search.cfm?pub_id=832374~~ (www.nist.gov/publications/fundamental-equations-state-parahydrogen-normal-hydrogen-and-orthohydrogen?pub_id=832374)**. More information may be obtained from NIST at **~~www.boulder.nist.gov/div838/Hydrogen/Index.htm~~ www.nist.gov/publications/fundamental-equations-state-parahydrogen-normal-hydrogen-and-orthohydrogen.**

T.3. Repeatability. – When multiple tests are conducted at approximately the same flow rate and draft size **greater than 1000 ~~scale intervals (~~increments on the device under test~~)~~**, the range of the test results for the flow rate shall not exceed 40 % of the absolute value of the maintenance tolerance and the results of each test shall be within the applicable tolerance. (Also see N.6.1.1. Repeatability Tests.)

T.6. Tolerance – on Minimum Measured Quantity (MMQ). - The applicable tolerance to the minimum measured quantity is twice those shown in Table T.2. Accuracy Classes and Tolerances for Hydrogen Gas-Measuring Devices.

Appendix D. Definitions

Instructions:

(A) Take all the definitions from the 3.39. Hydrogen Gas-Measuring Devices – Tentative Code and replace the current definitions in NIST HB 44, Appendix D. Definitions, and

(B) Add **3.39** to these definitions in NIST HB 44, Appendix D. Definitions:

configuration parameter. – Any adjustable or selectable parameter for a device feature that can affect the accuracy of a transaction or can significantly increase the potential for fraudulent use of the device and, due to its nature, needs to be updated only during device installation or upon replacement of a component, e.g., division value (increment), sensor range, and units of measurement. [2.20, 2.21, 2.24, 3.30, 3.37, **3.39,** 5.56(a)]

equipment, commercial. – Weights, measures, and weighing and measuring devices, instruments, elements, and systems or portion thereof, used or employed in establishing the measurement or in computing any basic charge or payment for services rendered on the basis of weight or measure. As used in this definition, measurement includes the determination of size, quantity, value, extent, area, composition (limited to meat and poultry), constituent value (for grain), or measurement of quantities, things, produce, or articles for distribution or consumption, purchased, offered, or submitted for sale, hire, or award. [1.10, 2.20, 2.21, 2.22, 2.24, 3.30, 3.31, 3.32, 3.33, 3.34, 3.35, 3.38, **3.39,** 4.40, 5.51, 5.56.(a), 5.56.(b), 5.57, 5.58, 5.59]

unit price. – The price at which the product is being sold and expressed in whole units of measurement. [1.10, 3.30, **3.39**] (Note: The Specifications and Tolerances Committee may wish to check other code sections to add for reference to this definition.)

At the NEWMA 2018 fall Interim Meeting, Mr. Mike Sikula (New York) reported during open hearings, a Hydrogen Gas Measuring (HGM) system was tested in NY and appeared to test successfully. The system was tested by a private company and witnessed by NY state weights and measures officials.

This publication is available free of charge from: https://doi.org/10.6028/NIST.SP.1253

Mr. Walt Remmert (Pennsylvania) reported that most states will find the test equipment cost prohibitive and feels that weights and measures will not be testing these systems. Mr. Jim McEnerney (Connecticut) reported that there is a commercial hydrogen gas measuring system installed in CT; however, it is not being used due to it being new to the market.

NEWMA believes this item should be upgraded from tentative code and recommended this as a Voting item.

At the NEWMA 2019 spring Annual Meeting, the Committee heard comments from Mr. John Barton (NIST) that the work group has not yet been able to reach a consensus on two key issues but is still optimistic that this this code is made permanent. Concerns include repeatability tests with minimum measured quantities and raised tolerances. Mr. Remmert had questions on size of test equipment and devices. In consideration of the comments NEWMA recommended this as a voting item on the NCWM S&T Committee agenda.

At the SWMA 2018 fall Annual Meeting, the SWMA heard that an agreement has been reached on the development of this proposal that has been supported by the Western Weights and Measures Association (WWMA) and the revised version of the proposal appears in their report which was provided to SWMA. NIST OWM considers the WWMA revised version of this proposal to be fully developed.

The SWMA reported it agrees that the WWMA version of the proposal should be considered and recommended that version of the proposal move forward as a Voting item.

At the CWMA 2018 fall Interim Meeting, the Committee received no comments on this item. CWMA recommends this as a Voting item.

At the CWMA 2019 spring Annual Meeting, the Committee received no comments on this item. The CWMA recommended this as a Voting item.

Additional letters, presentations, and data may have been part of the Committee's consideration and were posted on the NCWM website during the time this item was on the Committee's agenda. To the extent possible, comments and positions from such documents have been summarized in the committee's report along with comments heard during the Committee's hearings.

EVF – ELECTRIC VEHICLE FUELING SYSTEMS

EVF-3 D S.3.5. Temperature Range for System Components. and S.5.2. EVSE Identification and Marking Requirements.

Source:
NIST OWM (2019)

Purpose:
Ensure there are no inconsistencies in the tentative code between the temperature range requirement of – 40 °C to + 85 °C (− 40 °F to 185 °F) specified for the EVSE's operation and the requirement in paragraph S.5.2. EVSE Identification and Marking Requirements that specifies an EVSE must be marked with its temperature limits when they are narrower than and within – 20 °C to + 50 °C (− 4 °F to 122 °F).

Item Under Consideration:
NIST Handbook 44, Electric Vehicle Fueling Systems follows:

> **S.3.5. Temperature Range for System Components. –** EVSEs shall be accurate and correct over the temperature range of – 40 °C to + 85 °C (− 40 °F to 185 °F). If the system or any measuring system components are not capable of meeting these requirements, the temperature range over which the system is capable shall be

This publication is available free of charge from: https://doi.org/10.6028/NIST.SP.1253

stated on the NTEP CC, marked on the EVSE, and installations shall be limited to the narrower temperature limits.

S.5.2. EVSE Identification and Marking Requirements. – In addition to all the marking requirements of Section 1.10. General Code, paragraph G-S.1. Identification, each EVSE shall have the following information conspicuously, legibly, and indelibly marked:

(a) voltage rating;

(b) maximum current deliverable;

(c) type of current (AC or DC or, if capable of both, both shall be listed);

(d) minimum measured quantity (MMQ); and

(e) temperature limits, if narrower than and within – 20 °C to + 50 °C (− 4 °F to 122 °F).

Background/Discussion:
In 2012, the USNWG on electric vehicle service equipment (EVSE) began work to develop legal metrology standards for electricity measuring systems used in both electric vehicle fueling and submetering applications under a single code. The USNWG's first draft standard was based on the California Code of Regulation (CCR) Article 2.2 Electric Watthour Meters Section 4027. Initially the temperature range requirements for the operation of metering components and marking the equipment covered the same range and were taken verbatim from CCR Section 4027.2 paragraphs S.4.(o) Meter Identification and Marking Requirements and paragraph S.12. Temperature Range for Metering Components. Both requirements specified a temperature range of – 20 °C to + 50 °C. The USNWG has also harmonized wherever possible with ANSI C12.1-2014 Electric Meters-Code for Electricity Metering and ANSI C12.20-2015 Electricity Meters 0.1, 0.2 and 0.5 Accuracy Classes. In 2014, the USNWG agreed to widen the temperature range in NIST HB 44, Section 3.40, paragraph S.3.5. for systems components to – 40 °C to + 85 °C based on input that the wider range is an ANSI standard commercial temperature range. This range was adopted in 2015 and appears in the current version of NIST HB 44. However, only in ANSI C12.1 Section 4 in 4.7.3.16 Test Number 30 Effect of Operating Temperature is – 30 °C specified as the lowest minimum temperature limit and in 4.7.3.17 Test Number 31 Effects of Relative Humidity is + 85 °C specified as the maximum temperature limit.

Electric Vehicle Service Equipment (EVSE) must be capable of operating accurately over the temperature range specified in Section 3.40 Electric Vehicle Fueling Systems – Tentative Code or marked accordingly. Paragraph S.3.5. Temperature Range for Systems Components specifies that an EVSE not capable of operating over the specified temperature range of – 40 °C to + 85 °C (− 40 °F to 185 °F) must be marked with its narrower temperature range. The submitter is working to ensure there are no inconsistencies between the temperature range requirements specified for the EVSE's operation and the requirement in paragraph S.5.2. EVSE Identification and Marking Requirements that specify an EVSE must be marked with its temperature limits when they are narrower than and within – 20 °C to + 50 °C (− 4 °F to 122 °F).

Although the submitter has suggested this proposal as a developing item, it may be possible to clarify the intended temperature range(s) specified for the operation and marking of an EVSE by late 2018. If this occurs, there will be the opportunity for the community to consider an upgrade in the status of the proposal. This would allow for full implementation of these requirements for this rapidly emerging technology.

NIST OWM provided written comments to the Committee in advance of the 2019 NCWM Interim Meeting and subsequently posted them and made available on the NCWM website. OWM reported it is currently in the process of working with the weights and measures and electrical energy communities to collaborate on language to eliminate any perceived discrepancies between paragraphs S.3.5 and S.5.2. NIST has received some feedback and is continuing an assessment of the temperature ranges specified in these paragraphs.

During the Committee's 2019 NCWM Interim Meeting open hearings, the Committee heard no comments on item EVF-3. During the Committee work session, members of the committee agreed with the submitter and the regional associations that this item should be assigned a developing status.

During the 2019 NCWM Annual Meeting, Mrs. Tina Butcher (OWM) informed the Committee that work on this item is ongoing through the subcommittee and recommended that this item should move forward during the next revision cycle. During the S&T Committee's work session the Committee agreed to retain the Developing status for this item.

Regional Association Comments:
At the WWMA 2018 fall Annual Meeting, Mrs. Tina Butcher (NIST OWM), submitter of this item, commented that this proposal was brought forward as a result of a discrepancy identified by the State of California Division of Measurement Standards who noted conflicts in temperature ranges in two Sections of the Code. OWM is attempting to identify which of the two ranges is appropriate and is seeking input from manufacturers and others in the community on this point. Mrs. Butcher asked that the item be designated a "Developing item" to allow an opportunity for OWM to identify an appropriate recommendation. Consequently, WWMA agreed to recommend this be included as a Developing item on the NCWM S&T Committee's Agenda.

At the NEWMA 2018 fall Interim Meeting, during the Committee's open hearings members of the committee heard relative discussion on this topic and Electric Vehicle Fueling (EVF) Systems in general. The general consensus was that more information on this topic is required before proceeding. The Committee recommended this as a developing item.2019 spring Annual Meeting. Mr. Mike Sikula (New York) reported that New York owns a testing system and has brought it to the meeting. Mr. Jim Willis (New York) shared that the device can only test alternating current, not direct current. Many new installations utilize direct current. Testing is time dependent as a special (low flow) test can take over 45 minutes. Mr. Russ Vires (Mettler Toledo LLC) questioned whether this device is considered a master meter or not. Mr. Sikula stated he does not consider the device a master meter. NEWMA recommended this Item be designated a Developing status on the NCWM S&T Committee agenda.

At the SWMA 2018 fall Annual Meeting, the SWMA heard from NIST OWM that the U.S. National Working Group was working toward a proposal to align the temperatures with ANSI requirements.

The SWMA recommended this item be designated a Developing item until a specific proposal is brought forward.

At the CWMA 2019 spring Annual Meeting, no additional comments were heard during the meeting. The CWMA recommended that this item be given a Developing status

At the CWMA 2019 Spring Annual Meeting, the Committee heard no additional comments.

Additional letters, presentations, and data may have been part of the Committee's consideration and were posted on the NCWM website during the time this item was on the Committee's agenda. To the extent possible, comments and positions from such documents have been summarized in the committee's report along with comments heard during the Committee's hearings.

EVF-4 V Appendix D – Definitions: power factor (PF).

(This item was Adopted.)

Source:
NIST OWM (2019)

Purpose:
Simplify the definition for "Power Factor" in NIST Handbook 44 Section 3.40. Electric Vehicle Fueling Systems – Tentative Code and align this definition with one in a separate proposal under the Laws and Regulations Committee to adopt a "Method of Sale" requirement for electric watt hour meters.

This publication is available free of charge from: https://doi.org/10.6028/NIST.SP.1253

This publication is available free of charge from: https://doi.org/10.6028/NIST.SP.1253

Item Under Consideration:
Add the following definition to NIST Handbook 44, Electric Vehicle Fueling Systems Tentative Code:

> **power factor (PF).** – The ratio of ~~the~~ "active power" to ~~the~~ "apparent power" in an AC circuit. ~~**The power factor is a number between 0 and 1 that is equal to 1 when the voltage and current are in phase (load is entirely resistive).**~~ **It describes the efficient use of available power.** [3.40]

Background/Discussion:
The Electric Watthour Subgroup (EWH SG) of the NIST USNWG on Electric Vehicle Fueling & Submetering has been meeting since the 2017 NCWM Annual Meeting to develop proposed legal metrology standards for electric watthour-type meters for inclusion in NIST HB 130 and NIST HB 44. The EWH SG has developed and submitted a proposal for a new provision in NIST Handbook 130's Uniform Regulation for the Method of Sale (MOS) of Commodities to address the sale of electrical energy through electric watt hour meters. In the process of developing this draft (and a still-under-development NIST Handbook 44 code for these devices), the SG developed a definition for "power factor" that differs from the definition currently included in Section 3.40. Electric Vehicle-Fueling Systems – Tentative Code.

The EWH SG, which includes many of the same experts involved in the development of Section 3.40 and which consulted other industry standards in the development of this proposal, believes the definition shown in the Item Under Consideration is equivalent to that in the current Section 3.40. However, the new definition is simpler and eliminates possible confusion about its application in instances in which there are negative values. To avoid confusion about whether the two definitions are equivalent, it is desirable to align the definitions in Section 3.40 with that in the draft MOS proposal (and ultimately any definition proposed in a future code for electric watt hour meters).

OWM personnel were unable to attend the 2019 NCWM Interim Meeting due to the Federal Government shutdown in early 2019 due to a lack of appropriations; however, OWM provided written comments to the Committee on this item in the advance of the meeting. OWM believes these proposed changes will provide clarity to the language and ensure alignment of terminology between the two handbooks and recommends the Committee consider designating this as a "voting" item. Since the EVF&S Code is still "tentative", the definition does not yet appear in Appendix D. Thus, OWM recommends the title of this item be modified to delete that reference.

During open hearings at the 2019 NCWM Interim Meeting, the Committee heard no comments on item EVF-3. The Committee work session, Committee members agreed with the submitter and the regional associations that this item should be assigned a Voting status.

During the 2019 NCWM Annual Meeting, comments were received during the Committee open hearing. Mrs. Tina Butcher (NIST OWM) reported she is working with the EWH subgroup and noted that the definition shown in the Item Under Consideration was improved and is equivalent and will align with the proposed definition in NIST HB 130, Section 3.40 and agreed OWM could support a Voting status for this item.

During the S&T Committee's work session the Committee agreed with retaining the Voting status for this item.

Regional Association Comments:
At the WWMA 2018 fall Annual Meeting, Mrs. Tina Butcher (NIST OWM) submitter of this item, commented that the Electric Watthour Meter Subgroup of the USNWG on Electric Vehicle Fueling and Submetering (EVFS) developed a proposal Method of Sale requirement that appears on the L&R Agenda. That proposal includes a definition that varies from what is currently in the NIST Handbook 44 EVFS Tentative Code. This proposal EVF-4 is intended to align the definition in the HB 44 code with the new definition. The new definition was viewed by the EWH SG as more concise.

WWMA heard no comments or opposition to the proposal and recommended it be designated as a Voting Item on the NCWM S&T Committee's Agenda.

This publication is available free of charge from: https://doi.org/10.6028/NIST.SP.1253

At the NEWMA 2018 fall Interim Meeting, no comments were heard during the committee's open hearings. Hearing no opposition or discussion on this item, NEWMA believes this item is fully developed and recommended this as a voting item.

2019 spring Annual Meeting. No comments were heard during the committee's open hearings. NEWMA recommended this as a Voting item on the NCWM S&T Committee agenda.

At the SWMA 2018 fall Annual Meeting, the SWMA heard from NIST OWM that this was proposal consists of adding a definition of the term "power factor" as used in the code and recommended it be given a Voting status. The SWMA recommends this as a Voting item.

At the CWMA 2018 fall Interim Meeting, the Committee received no comments on this item during open hearings. CWMA recommends this as a Voting item.

At the CWMA 2019 spring Annual Meeting, the Committee received no comments on this item during open hearings. The CWMA recommended this as a Voting item.

Additional letters, presentations, and data may have been part of the Committee's consideration and were posted on the NCWM website during the time this item was on the Committee's agenda. To the extent possible, comments and positions from such documents have been summarized in the Committee's report along with comments heard during the Committee's hearings.

TXI – TAXIMETERS

TXI-1 V N.1.3.2. Taximeters Using Other Measurement Data Sources.

(This item was Adopted.)

Source:
NIST OWM (2019)

Purpose:
Permit the field examination of taximeters on non- public roads.

Item Under Consideration:
Amend NIST Handbook 44 Taximeter Code as follows:

N.1.3.2. Taximeters Using Other Measurement Data Sources. – Except during type evaluation, all tests shall be performed under conditions that are considered usual and customary for the location(s) where the system is normally operated and as deemed necessary by the statutory authority.
(Added 2017)

~~**N.1.3.2.1. Roads. All tests shall be conducted on public roads.**~~
~~**(Added 2017)**~~

N.1.3.2.1~~2~~.Testing for Environmental Influences. – During type evaluation, the distance test may be performed on a route traveled by the vehicle that exposes the system to conditions possibly contributing to the loss of, or interference with, the signal(s) providing measurement data. This may include:

(a) objects that may obstruct or reflect signals such as tall buildings/structures, forestation, tunnels, etc.;

(b) routes that do not follow a straight-line path;

(c) significant changes in altitude; and

(d) any other relevant environmental conditions.

(Added 2017)

Background/Discussion:
Existing Taximeters Code paragraph N.1.3.2.1. Roads requires that all testing of taximeters be performed on public roads. This requirement does not allow regulatory officials to conduct official examinations in locations not accessible to the public that may have been designated as preferable test courses or specifically designed and created for testing and which may provide more suitable conditions for testing purposes. Measured courses have customarily been established by regulatory agencies at locations including large privately-owned paved lots, airports, and other non-public locations where the flow of traffic is not a major concern and impediment to the conduct of official tests. These types of non-public locations are also desirable since safety concerns related to the general traffic in congested areas can be reduced or eliminated.

Some transportation-for-hire systems that use a measurement of distance traveled derived from sources external to the vehicle may also use mapping services to more accurately determine the positioning of the vehicle while traveling. These mapping services may not include roadways that are not accessible to the general public and therefore, may not be useful in assisting to more accurately determining the position of the vehicle and the route taken.

The providers of transportation-for-hire systems that utilize mapping services to enhance the calculation of distance traveled may therefore oppose this item.

OWM personnel were unable to attend the 2019 NCWM Interim Meeting because the Department of Commerce was part of the Federal Government that was closed as part of the partial government shutdown in early 2019 due to a lack of appropriations. In written analysis shared with the Committee in advance of the Interim Meeting, OWM provided the following with respect to this item:

> OWM understands that the requirement proposed to be deleted in this item prohibits regulatory officials from conducting official examinations of taximeters using measurement data not obtained from the rotation of the vehicle's wheels on road courses that are not publicly-owned. This would prohibit testing on measured courses that may have been established by jurisdictions in locations such as some airfields, corporate-owned lots or parking areas, or other privately-owned facilities. These types of privately-owned locations can offer the benefit of an established measured test course where the hazards and disruptions of normal road traffic can be avoided during official tests.
>
> OWM believes the safety and efficiency in testing offered by a measured course located on other than publicly-traveled roadways to be primary considerations in any decisions made when selecting test sites. OWM also notes that some systems using location services (which may include mapping-type services that do not include information about privately-owned properties) for determining the distance traveled by a vehicle could possibly lose portions of measurement for distance traveled if the mapping services used only covers publicly-owned roadways. It is understood that this was the rationale for the creation of this requirement by the USNWG on Taximeters when addressing those types of transportation system using location services as means to measure distance traveled. OWM believes however, that it is unreasonable to presume that those types of transportation services would limit their service coverage area to only public roadways. Conversely, it seems more reasonable to believe those transportation service providers will provide transportation services (and assess fare charges) to destinations that do include distance traveled on private properties.
>
> OWM believes this proposal is fully developed and agrees with all four regional associations that it be considered as a voting item.

During the 2019 NCWM Interim Meeting, the Committee received no comments on this item during open hearings. The Committee assigned a Voting status to this proposal.

During the 2019 NCWM Annual Meeting, no comments were received during the Committee open hearings and the Committee agreed to present the item for Vote.

This publication is available free of charge from: https://doi.org/10.6028/NIST.SP.1253

This publication is available free of charge from: https://doi.org/10.6028/NIST.SP.1253

Regional Association Comments:
At the WWMA 2018 fall Annual Meeting, Mrs. Tina Butcher (NIST OWM) explained that this item came from the USNWG on Taximeters which proposed the change to address the fact that some jurisdictions have test courses laid out on non-public roads. Mr. Kurt Floren (Los Angeles County, California) raised a question regarding how testing would be done on a non-public road in situations where a network system doesn't include mapping for that area. Mr. Stan Toy (Santa Clara County, California) noted the proposed change wouldn't create a conflict in that case. If the area wasn't covered by the system under test, a different testing location would need to be used. He noted that this issue was discussed by the WG and the WG supports the change. Mr. Paul Jordan (Ventura County, California) suggested rather than deleting the language, perhaps the word "shall" could simply be changed to "may." Mr. Toy acknowledged this would be an acceptable alternative. Based on the comments received the WWMA recommended the item be designated as a Voting item.

At the NEWMA: 2018 fall Interim Meeting, the Committee received no comments during open hearings. Hearing no opposition or discussion on this item, NEWMA believes this item is fully developed and recommended this as voting item.2019 spring Annual Meeting. Mr. Mike Sikula (NY) voiced support for the item. Mr. John Barton (NIST OWM) stated that when developing the Code, it was originally insisted that testing be conducted only on public roads as some mapping services, cannot measure distances on private roads. It has since been determined possible to strike conduct testing on public roads only. Based on the comments, NEWMA recommended this as a Voting item on the NCWM S&T Committee agenda.

At the SWMA 2018 fall Annual Meeting, a representative of the USNWG on Taximeters commented that the WG supports the removal. Of paragraph N.1.3.2.1. The SWMA reported it believes this item is fully developed and recommended it as a Voting item.

At the CWMA 2018 fall Interim Meeting, no comments were heard regarding this item. CWMA recommended this as a Voting item.

2019 spring Annual Meeting, the Committee received no comments during the open hearings. The CWMA recommended this as a Voting item.

Additional letters, presentations, and data may have been part of the Committee's consideration and were posted on the NCWM website during the time this item was on the Committee's agenda. To the extent possible, comments and positions from such documents have been summarized in the Committee's report along with comments heard during the Committee's hearings.

GMA – GRAIN MOISTURE METERS 5.56 (A)

GMA-2 V Table S.2.5. Categories of Devices and Methods of Sealing.

(This item was Adopted.)

Source:
NTEP Grain Analyzer Sector (2019)

Purpose:
Require future NTEP certified grain moisture meters to utilize Category 3 sealing methods.

Item Under Consideration:
Amend NIST Handbook 44 Grain Moisture Meter Code 5.56 (a) as follows:

This publication is available free of charge from: https://doi.org/10.6028/NIST.SP.1253

Table S.2.5.
Categories of Device and Methods of Sealing

Categories of Device	***Methods of Sealing***
Category 1[1]: *No remote configuration capability.*	*Seal by physical seal or two event counters: one for calibration parameters (000 to 999) and one for configuration parameters (000 to 999). If equipped with event counters, the device must be capable of displaying, or printing through the device or through another on-site device, the contents of the counters.*
Category 2[1]: *Remote configuration capability, but access is controlled by physical hardware.* *A device shall clearly indicate that it is in the remote configuration mode and shall not be capable of operating in the measure mode while enabled for remote configuration.*	*The hardware enabling access for remote communication must be at the device and sealed using a physical seal or two event counters: one for calibration parameters (000 to 999) and one for configuration parameters (000 to 999). If equipped with event counters, the device must be capable of displaying, or printing through the device or through another on-site device, the contents of the counters.*
Category 3[2]: ~~***Remote***~~ ***C***~~***c***~~*onfiguration capability* ***access*** ~~***Access***~~ *may be unlimited or controlled through a software switch (e.g., password).* *When accessed for the purpose of modifying sealable parameters, the device shall clearly indicate that it is in the configuration mode and shall not be capable of operating in the measuring mode.*	*An event logger is required in the device; it must include an event counter (000 to 999), the parameter ID, the date and time of the change, and the new value of the parameter (for calibration changes consisting of multiple constants, the calibration version number may be used rather than the calibration constants). A printed copy of the information must be available through the device or through another on-site device. The event logger shall have a capacity to retain records equal to 25 times the number of sealable parameters in the device, but not more than 1000 records are required. (Note: Does not require 1000 changes to be stored for each parameter.)*
~~***Category 3a: No remote capability, but operator is able to make changes that affect the metrological integrity of the device (e.g., slope, bias, etc.) in normal operation.***~~ ~~****When accessed for the purpose of modifying sealable parameters, the device shall clearly indicate that it is in the configuration mode and shall not be capable of operating in the measuring mode.***~~	~~***Same as Category 3***~~
~~***Category 3b: No remote capability, but access to metrological parameters is controlled through a software switch (e.g., password).***~~ ~~****When accessed for the purpose of modifying sealable parameters, the device shall clearly indicate that it is in the configuration mode and shall not be capable of operating in the measuring mode.***~~	~~***Same as Category 3***~~
[1] Not allowed for devices manufactured on or after January 1, 2020 **[2] Required for all devices manufactured on or after January 1, 2020**	

[Nonretroactive as of January 1, 2020]

This publication is available free of charge from: https://doi.org/10.6028/NIST.SP.1253

~~*[*Nonretroactive as of January 1, 2014]*~~

(Amended 1998 and 2013 **and 2019**

Background/Discussion:

Currently, two active NTEP Grain Analyzer Certificates of Conformance indicate sealing is by use of physical seal. One of those is a single model within a model family consisting of four distinct models. The original evaluations for these two currently active certificates were conducted in 1994 and 1997 with many amendments to each made thereafter. Since 1997 all new makes and models submitted for NTEP evaluation have utilized audit trails which meet the Category 3 Methods of Sealing. Recognizing audit trails can be a more effective means of sealing devices and that most manufacturers have already moved in that direction we are recommending all future devices manufactured as of January 1, 20XX be required to utilize Category 3 methods of sealing. Further discussion on this issue can be found in the 2016 and 2018 Grain Analyzer Sector Summaries. Adoption of this proposal would necessitate an update to the sealing methods for two models of grain analyzers. and may not be feasible for those models. Additionally, some Weights and Measures jurisdictions do not recognize audit trails for sealing (e.g., electronic seals).

NIST OWM: NIST OWM was unable to attend the 2019 NCWM Interim meeting due to a Government shutdown caused by a lapse in appropriations. OWM provided written comments to the Committee prior to the Interim Meeting. These comments are as follows:

> The discussion of changing the sealing requirements for grain analyzers originated during the 2016 GA Sector meeting while discussing other S&T GMA items B3: GEN-2 and GMA-1 "Address Devices and Systems Adjusted Using a Removable digital storage Device." Some grain analyzers (GA) have a removable storage disk that is used to change the calibration of the meter. Because of the ease in changing calibrations for these devices, the Grain Analyzer Sector felt that Category 3 sealing, which is specified as a device having remote configuration and that required an event logger as the method of sealing, would be appropriate sealing for these devices. But removable storage discs do not meet the definition of remotely configured. The language in B3: GEN-2 and GMA-1 were proposed to address devices with removable storage devices. During this discussion, two points were raised:
>
> - The complexity of grain analyzers (GA) and the ability to make changes to calibrations in various ways, and
> - Most NTEP grain moisture meters are category 3 devices and are equipped with an event logger as the method of sealing.
>
> The GA sector agreed that more information would be gained with an event logger as opposed to a lead and wire seal. Also, since most grain analyzers are equipment to meet category 3 sealing the GA Sector agreed to add a non-retroactive requirement to the NIST HB 44 Section 5.56(a) that NTEP GA must meet category 3 method of sealing.
>
> In reviewing the item under consideration, OWM believes there may be confusion about how to apply the nonretroactive requirements with the current proposal and there may be an unintentional gap in the implementation dates. OWM collaborated with the original proposer and submitted proposed changes to the submitter for review. OWM recommends reformatting the proposal as follows and believes these proposed changes will clarify the implementation dates and should be forwarded as a voting item at the 2019 NCWM Interim Meeting:
>
> **S.2.5. Provision for Sealing.** – ~~Provision shall be made for applying~~ ~~a~~**An approved means of security shall be provided** ~~**security seal in a manner that requires the security seal to be broken, or for using other approved means of providing security (e.g., audit trail available at the time of inspection**~~ as defined in ~~**Table**~~ **paragraphs** S.2.5.**1.** ~~Categories of Device and Methods of~~ Sealing **Requirements for Devices Manufactured Between 1999 and 2020 and S.2.5.2. Sealing Requirements for Devices Manufactured on or after 2020**) before any change that affects the metrological integrity of the device can be made to any mechanism.

S.2.5.1. Sealing Requirements for Devices Manufactured Between 1999 and 2020. - The appropriate sealing requirements in Table S.2.5.1. Categories of Device and Methods of Sealing for Devices Manufactured Between 1999 and 2020 shall apply.

Table S.2.5.1
Categories of Device and Methods of Sealing for Devices Manufactured Between 1999 and 2020

Categories of Device	Methods of Sealing
Category 1: No remote configuration capability.	Seal by physical seal or two event counters: one for calibration parameters (000 to 999) and one for configuration parameters (000 to 999). If equipped with event counters, the device must be capable of displaying, or printing through the device or through another on-site device, the contents of the counters.
Category 2: Remote configuration capability, but access is controlled by physical hardware. A device shall clearly indicate that it is in the remote configuration mode and shall not be capable of operating in the measure mode while enabled for remote configuration.	The hardware enabling access for remote communication must be at the device and sealed using a physical seal or two event counters: one for calibration parameters (000 to 999) and one for configuration parameters (000 to 999). If equipped with event counters, the device must be capable of displaying, or printing through the device or through another on-site device, the contents of the counters.
Category 3: ~~**Remote**~~ **C**~~**c**~~onfiguration capability **access** ~~**Access**~~ may be unlimited or controlled through a software switch (e.g., password). When accessed for the purpose of modifying sealable parameters, the device shall clearly indicate that it is in the configuration mode and shall not be capable of operating in the measuring mode.	An event logger is required in the device; it must include an event counter (000 to 999), the parameter ID, the date and time of the change, and the new value of the parameter (for calibration changes consisting of multiple constants, the calibration version number may be used rather than the calibration constants). A printed copy of the information must be available through the device or through another on-site device. The event logger shall have a capacity to retain records equal to 25 times the number of sealable parameters in the device, but not more than 1000 records are required. (Note: Does not require 1000 changes to be stored for each parameter.)
~~**Category 3a: No remote capability, but operator is able to make changes that affect the metrological integrity of the device (e.g., slope, bias, etc.) in normal operation.**~~ ~~***When accessed for the purpose of modifying sealable parameters, the device shall clearly indicate that it is in the configuration mode and shall not be capable of operating in the measuring mode.**~~	~~**Same as Category 3**~~

This publication is available free of charge from: https://doi.org/10.6028/NIST.SP.1253

~~**Category 3b: No remote capability, but access to metrological parameters is controlled through a software switch (e.g., password).**~~ ~~***When accessed for the purpose of modifying sealable parameters, the device shall clearly indicate that it is in the configuration mode and shall not be capable of operating in the measuring mode.**~~	~~**Same as Category 3**~~

S.2.5.2. Sealing Requirements for Devices Manufactured on or after 2020. - An event logger is required in the device; it must include an event counter (000 to 999), the parameter ID, the date and time of the change, and the new value of the parameter (for calibration changes consisting of multiple constants, the calibration version number may be used rather than the calibration constants.)

A printed copy of the information must be available through the device or through another on-site device. The event logger shall have a capacity to retain records equal to 25 times the number of sealable parameters in the device, but not more than 1000 records are required. (Note: Does not require 1000 changes to be stored for each parameter.)

During the NCWM 2019 Interim Meeting, the Committee heard comments from Mr. Doug Musick (Kansas) who reported this proposal came from the Grain Analyzer Sector and only one model may be affected by the proposed changes. He further stated that the proposed changes would clean up the table to reflect what manufacturers are producing without changing the application.

In consideration of the written comments provided by OWM in advance of the meeting and the comments from Mr. Musick, the Committee agreed to assign a voting status this this item.

During the 2019 NCWM Annual Meeting open hearings, Mr. Russ Vires (Mettler-Toledo, LLC) speaking on behalf of SMA stated that the SMA takes no position on this item. Ms. Diane Lee (NIST OWM) commented that after further review of the item, OWM's Legal Metrology Devices Program concluded that the current proposal may be confusing as to when the dates for some requirements would apply. As such, OWM provided suggested language for clarification. Mr. Musick stated that there is no gap in the dates of when to apply the requirements.

During the S&T Committee's work session, the members of the Committee considered if it would be clear to officials how to apply the requirements in the table given the dates specified. Members of the Committee concurred the changes were unambiguous. The Committee added a nonretroactive date of 2020 to the proposal and agreed to present it for a vote as shown in the Item Under Consideration.

Regional Association Comments:
At the WWMA 2018 fall Annual Meeting, Mrs. Tina Butcher (NIST OWM) provided an overview of the item, noting it originated from the NTEP Grain Analyzer Sector. Hearing no additional comments and no comments in opposition to the proposal, the WWMA recommends this item be designated as a Voting item.

At the NEWMA 2018 fall Interim Meeting, the Committee received no comments on this item during open hearings. Hearing no opposition or discussion on this item, NEWMA believes this item is fully developed and recommended this Item be designated as a Voting item.

A the NEWMA 2019 spring Annual Meeting, a comment was heard from Mr. Vires, speaking on behalf of the SMA, reported that the SMA takes no position on this item. The Committee recommends this as a Voting item.

At the SWMA 2018 fall Annual Meeting, a representative from Kansas commented that only one manufacturer still uses a hard seal and that a hard date should be given when it is passed. The SWMA believes the item is fully developed and recommends this as a Voting item.

This publication is available free of charge from: https://doi.org/10.6028/NIST.SP.1253

This publication is available free of charge from: https://doi.org/10.6028/NIST.SP.1253

At the CWMA 2018 fall Interim Meeting, Mr. Doug Musick (Kansas) reported on this proposal. CWMA feels this item is fully developed and recommends this as a Voting item.

At the CWMA 2019 spring Annual Meeting, Mr. Vires speaking on behalf of the SMA, stated that SMA has no position. Ms. Lee commented that the proposal may be confusing, and their proposed changes were not heard at the NCWM Interim and are available on the NCWM website.

Additional letters, presentations, and data may have been part of the Committee's consideration and were posted on the NCWM website during the time this item was on the Committee's agenda. To the extent possible, comments and positions from such documents have been summarized in the Committee's report along with comments heard during the Committee's hearings.

GMA-3 D Table T.2.1. Acceptance and Maintenance Tolerances Air Oven Method for All Grains and Oil Seeds.

Source:
NTEP Grain Analyzer Sector (2019)

Purpose:
Reduce the tolerances for the air oven reference method.

Item Under Consideration:
Amend NIST Handbook 44 Grain Moister Meter Code 5.56 (a) as follows:

T.2.1. Air Oven Reference Method. – Maintenance and acceptance tolerances shall be as shown in Table T.2.1. Acceptance and Maintenance Tolerances Air Oven Reference Method. Tolerances are expressed as a fraction of the percent moisture content of the official grain sample, together with a minimum tolerance.

(Amended 2001)

~~Table T.2.1. Acceptance and Maintenance Tolerances Air Oven Reference Method~~		
~~Type of Grain, Class, or Seed~~	~~Tolerance~~	~~Minimum Tolerance~~
~~Corn, oats, rice, sorghum, sunflower~~	~~0.05 of the percent moisture content~~	~~0.8 % in moisture content~~
~~All other cereal grains and oil seeds~~	~~0.04 of the percent moisture content~~	~~0.7 % in moisture content~~

Table T.2.1. Acceptance and Maintenance Tolerances Air Oven Reference Method for All Grains and Oil Seeds	
Tolerance	Minimum Tolerance
0.03 of the percent moisture content	0.5 % in moisture content

(Amended 2001 and 20XX)

Background/Discussion:
Prior to the 2016 Grain Analyzer Sector meeting, NIST OWM received requests for copies of the annual request for grain samples and list of grains that Agriculture Marketing Service (AMS), Federal Grain Inspection Service (FGIS) request from states to include in their ongoing calibration program. States and other interested parties wanted to verify that corn samples from their State were included in the calibration data for NTEP meters because of moisture variations States reported seeing between Unified Grain Moisture Algorithm (UGMA) meter and other meter technologies on corn samples.

During the 2016 Grain Analyzer Sector Meeting, Mr. Jess McCluer (National Grain and Feed Association) reported there were numerous accounts of inconsistent moisture meter measurements involving grain shipments from U.S. interior facilities to U.S. export port facilities. Mr. McCluer further stated that, if the UGMA can make better measurements, then the sector should consider reducing the tolerances in NIST HB 44. At the 2016 and 2017 Grain Analyzer Sector meetings, Mr. Charlie Hurburgh (Iowa State University) agreed to chair a TG to review the current NIST HB 44 tolerance for both UGMA meters and non-UGMA meters. During the 2018 meeting, Mr. Hurburgh reported that based on data he analyzed from Iowa State Weights and Measures Grain Inspection reports, UGMA meters read closer to the reference air oven moisture results than non-UGMA meters. See data below. The Y-axis on the chart below represents the number of meters (UGMA and 2MHz meters).

Iowa Moisture Meter Inspection Results				**2014-2017**	
			Average Result on Inspector Sample		
Year	Tech	Number of	Corn 1	Corn 2	Soybean
		Meters	Meter-Std (% pts)	Meter-Std (% pts)	Meter-Std (% pts)
2014	UGMA	440	−0.02	0.02	−0.01
2015	UGMA	531	0.04	−0.06	−0.02
2016	UGMA	654	0.05	−0.06	0.01
2017	UGMA	720	−0.18	−0.06	−0.05
	Avg		**-0.03**	**-0.04**	**-0.02**
2014	2MHz	679	−0.25	0.04	−0.07
2015	2MHz	595	−0.29	−0.38	0.02
2016	2MHz	483	−0.28	−0.42	0.04
2017	2MHz	445	−0.15	−0.35	−0.01
	Avg		**-0.24**	**-0.28**	**0.00**
Different samples each year for Corn 1, Corn 2, Soy					

This publication is available free of charge from: https://doi.org/10.6028/NIST.SP.1253

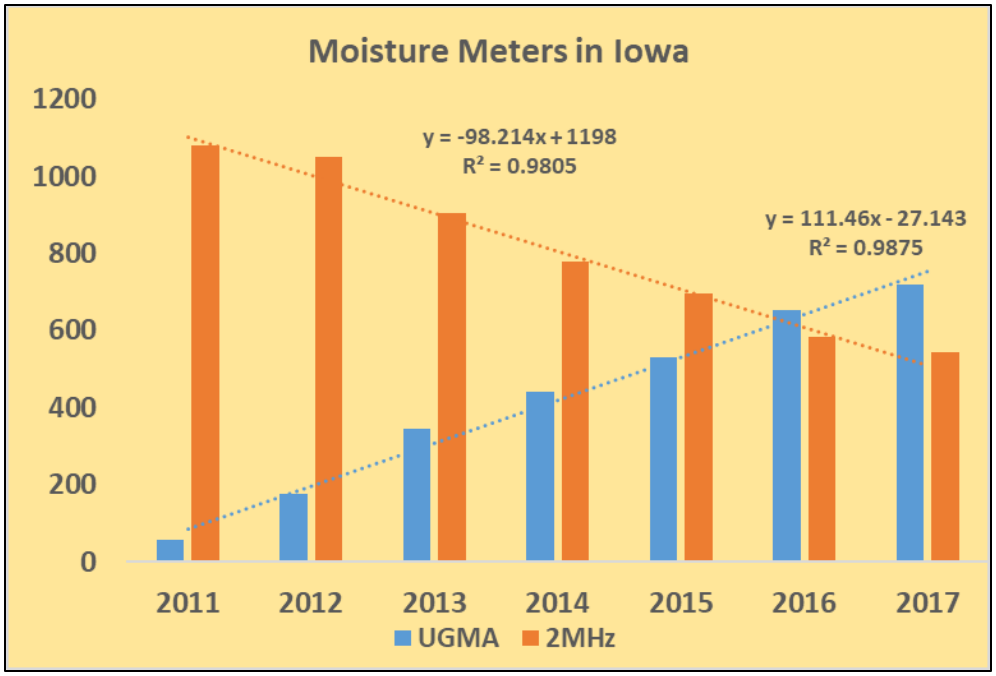

It was also noted during the 2018 Grain Analyzer Sector meeting that the current tolerances were developed in 1991 and have not changed with the change in technology for these devices; and is needed for grain industry risk management.

NIST OWM was unable to attend the 2019 Interim meeting due to a Government shutdown because of a lapse in appropriations. OWM provided comments to the S&T Committee prior to the Interim Meeting. These comments are summarized as follows:

> The Grain Analyzer Sector originally forwarded this proposal to the regional weights and measures associations with a recommended voting status. All regional weights and measures associations agreed to recommend the proposal be forwarded as an item on the National Committee's 2019 NCWM Interim Meeting Agenda and the Sector appreciates their review and support. However, following the regional meetings, additional data was submitted to the Sector which indicates a need to consider developing different tolerances for some grain types. Through a subsequent ballot and a majority vote, the Sector agreed to recommend changing the status of the item to developing to provide its members time to consider additional data and changes to the original proposal. OWM agrees with the Grain Analyzer (GA) Sector's revised decision to change the status of this item to a developing status.
>
> ***History***
> This proposal to change the air-oven method tolerances was developed during the 2018 GA Sector Meeting. During the 2018 GA Sector Meeting, Dr. Hurburgh provided the Sector with an analysis of data for 2-corn and 1-soybeans samples, which included the average error for UGMA grain moisture meter technology and the average error of 2 MHz grain moisture meter technology from Iowa State weights and measures inspection data for years 2014-2017. Based on the Sector's review of the data, discussion of new tolerances, and the ability of the technologies to meet the new tolerances, the Sector agreed to change the tolerances based on the data provided.
>
> During additional discussion of the tolerances to be applied to other grains, it was proposed that the same tolerances could apply to all grains, because corn is one of the more difficult grains to test and would likely have one of the largest variations when tested. No objections from states or meter manufacturers were provided during the discussion nor the voting to forward the item to the regional weights and measures associations. Following the Sector meeting, one state noted that there may be an issue with applying the tolerance to some grain types; specifically, long-grain rough rice (LGRR). The GA Sector's technical advisor requested that the state forward field data to review the grain moisture meter results for LGRR and other grains. After review of the data with the

This publication is available free of charge from: https://doi.org/10.6028/NIST.SP.1253

proposed tolerances, it was determined that a high meter failure rate could result with a change to the tolerances for some grain types.

The Sector's Technical Advisor then discussed the findings with the NTEP laboratory and the Sector members that had originally proposed the tolerance change and all agreed with proposing a developing status for this item. Members of the Sector were officially balloted and based on results the Sector agreed to change the originally proposed voting status to Developing to allow members of the Sector time to review additional data and make changes to its original proposal.

During the Committee's NCWM 2019 Interim Meeting open hearings, the Committee heard comments to agenda item GMA-3. In addition, an OWM analysis was provided on this item prior to the Interim Meeting. Mr. Loren Minnich (Kansas) commented that he spoke with Ms. Lee and she noted there was one state concerned with the application of the reduced tolerances to all grain types, specifically grains with hulls or husks. Mr. Minnich suggested this item be assigned a Developing status to allow for more research into this issue.

During the 2019 NCWM S&T Committee Meeting, the S&T Committee considered the comments during the opening hearing and comments submitted prior to the meeting and recommended a developing status for S&T agenda item GMA-3.

In consideration of the comments heard, the Committee agreed to designate the item developing at the 2019 NCWM Interim Meeting.

At the 2019 NCWM Annual Meeting, Ms. Lee provided an update of the GA Sectors activities associated with this agenda item and reported that the Sector will discuss this item at its August 2019 Meeting. She also noted that the Sector agreed with assigning this item a Developing status until there is additional data from other grain types to ensure that adequate changes are made to the tolerances.

During the S&T Committee's work session, the Committee agreed with the Sector's recommendation to retain the Developing Status for this item.

Regional Association Comments:
At the WWMA 2018 fall Annual Meeting, Mrs. Tina Butcher (NIST OWM) provided an overview of the item, noting it originated from the NTEP Grain Analyzer Sector. Hearing no additional comments and no comments in opposition to the proposal, the WWMA recommends this item be designated as a Voting item.

At the NEWMA 2018 fall Interim Meeting, the Committee heard no comments during open hearings. Hearing no opposition or discussion on this item, NEWMA believes this item is fully developed and recommended this as a voting item.2019 spring Annual Meeting. A comment was heard from Mr. Russ Vires (Mettler Toledo LLC) speaking on behalf of the SMA, the SMA takes no position on this item and looks forward to more analysis. NEWMA recommended this item remain developing on the NCWM S&T Committee agenda.

At the SWMA 2018 fall Annual Meeting, the SWMA heard that the table currently in use is obsolete and that the tolerances needed to change to match new technology. The SWMA recommended this as a Voting item.

At the CWMA 2018 fall Interim Meeting, Mr. Doug Musick (Kansas) commented on this proposal. CWMA feels this item is fully developed and recommends this as a Voting item.

At the CWMA 2019 spring Annual Meeting, Mr. Vires, speaking on behalf of the SMA, stated that SMA takes no position. Mr. Musick commented that new technology is capable of more strict tolerances. Ms. Lee commented that the proposed tolerances were based on tests of corn and soybeans and that Arkansas was concerned that other grains may not meet these tolerances. The CWMA recommended this as a Developing item.

Additional letters, presentations, and data may have been part of the Committee's consideration and were posted on the NCWM website during the time this item was on the Committee's agenda. To the extent possible, comments and

This publication is available free of charge from: https://doi.org/10.6028/NIST.SP.1253

positions from such documents have been summarized in the Committee's report along with comments heard during the Committee's hearings.

MDM – MULTIPLE DIMENSION MEASURING DEVICES

MDM-2 W S.1.7. Minimum Measurement

Source:
Parceltool P/L (2019)

Purpose:
Accept mobile tape based MDMD devices from the 12D minimum measurement.

Item Under Consideration:
Amend NIST Handbook 44 Multiple Dimension Measuring Devices Code as follows:

> **S.1.7. Minimum Measurement. –** Except for entries of tare **and mobile tape based MDMD devices**, the minimum measurement by a device is 12 d. The manufacturer may specify a longer minimum measurement. For multi-interval devices, this applies only to the first measuring range (or segment) of each measurement axis (length, width, and height).
> (Amended 2017)

Background/Discussion:
The 12 division (d) minimum measurement is designed for instruments that use an internal rounding function to round the actual measurement up or down to the nearest value of d before being displayed. For measurement of 12 d, or less, the potential error in the measurement is considered too large and therefore the specification of the 12 d minimum measurement is in place.

Measurements below 12 d are commonplace when using a mobile tape (tape measure) type of device for determining measurements. An accepted practice for this type of device is for the Measurement to be rounded up to the nearest whole unit of measurement (e.g. 1 inch) before being used to calculate any charges.

OWM personnel were unable to attend the 2019 NCWM Interim Meeting because Commerce was one of the federal departments' shutdown as part of the government shutdown in early 2019 due to a lack of appropriations. In written comments and recommendations provided to the Committee in advance of the Interim Meeting, OWM provided the following with respect to this item:

OWM recognizes there is a potential for introducing excessive error in measurements when they are performed using a process or instrument that does not provide a sufficient level of resolution in the measurement. Minimum measurement requirements are established in NIST HB 44 device codes using the premise that a "rounding of digital values and applicable tolerances create the potential for large errors at small measurements." This effect decreases proportionately as the measurement size is increased along with the number of increments used in the measurement. To put this principle into perspective as it relates to MDMDs, NIST HB 44 maintenance and acceptance tolerances applicable to MDMDs are plus or minus 1 division (See paragraph T.3. Tolerance Values). Considering this tolerance relative to this proposal, a 1-division error within a 12-division measurement (i.e., the minimum measurement currently permitted in accordance with paragraph S.1.7.) represents over 8 percent of the measurement value ($1 \div 12 = 0.083 \simeq 8.3\%$). If the measurement were to include 50 divisions (or increments), that same 1-division error represents only 2 percent of the measurement value ($1 \div 50 = 0.020$ or 2%).

Compounding the potential for even greater error is the fact that MDMDs are generally used to measure hexahedron-shaped objects by determining values for length, width, and height, and then multiplying these values together to determine the cubic volume occupied by the object. Since there are three measurements needed to determine the

This publication is available free of charge from: https://doi.org/10.6028/NIST.SP.1253

This publication is available free of charge from: https://doi.org/10.6028/NIST.SP.1253

volume, the error effect of using a device to make small measurements is multiplied threefold. For example, a 1-division plus error at a 12-division measurement of length, width, and height would result in over a 27 percent error in the volume measurement of the object being measured as illustrated in the table below.

Axis	Measurement (+ 1 d error)	Actual
Length	13 d	12 d
Width	13 d	12 d
Height	13 d	12 d
Volume	2197 x-unit3	1728 x-unit3
Difference: Measurement minus Actual	2197 x-unit3 – 1728 x-unit3 = 469 x-unit3	
Percent error calculation	(469 x-unit3 ÷ 1728 x-unit3) x 100 = 27.1 %	

Thus, given the potential that this proposal has for creating such very large measurement errors and the monetary impact those errors can have on commercial transactions, OWM does not believe this item should be given a voting status.

A guiding principle in the development of NIST HB 44 requirements is that the same requirements should apply to devices used in the same application, regardless of technology or design. The proposed change in this item violates the principle by proposing there be an exemption to one of the requirements in the MDMD code for a particular type of MDMD.

The background/discussion pertaining to this item includes the statement that it is not unusual for measurements to be made of less than 12 divisions. If this is in fact the case, those using these devices commercially to take such measurements are violating the minimum measurement requirement in NIST HB 44. OWM would hope that the submitter of this item, knowing this to be true, would take necessary steps to educate users so that accurate measurements can be assured. OWM believes there may also be a problem caused by the use of a device with too large a division size for use in measuring small objects rendering that device unsuitable for the purpose intended. Another potential problem may be created when two devices with different division values are needed due to the wide linear range of the different axes needing to be measured.

The background/discussion portion of this item also indicates an accepted practice for this type of device is for the measurement to be rounded up to the nearest whole division. OWM notes such rounding conflicts with the instructions provided on the FedEx and UPS websites for determining DIM weight, that specify the measurements are to be rounded to the nearest whole inch.

The current 12 d minimum measurement specified in NIST HB 44 is uniform with the same in OIML R 129. Thus, a change to NIST HB 44 requirement would cause conflict with OIML requirements.

During the 2019 NCWM Interim Meeting, the Committee heard comments from a multiple dimension measuring device manufacturer, who opposed the exception of the 12 d requirement for a single device type and questioned if the 12 d requirement should be a specification for any MDMD. Ms. Fran Elson-Houston (Ohio) opposed the item.

The SMA took no position on the item and Mr. Kevin Schmidt (California) supported the item and suggested that the MDMD Work Group be given the item to Developing.

During the Committee's work session, members agreed there was little support for this item and agreed to Withdraw the item.

Regional Association Comments:
At the WWMA 2018 fall Annual Meeting, Mrs. Butcher questioned whether the Multiple Dimension Measuring Devices Work Group (MDMD WG) had reviewed the proposal. Mr. Richard Suiter (Richard Suiter Consulting)

acknowledged himself, a member of the MDMD WG and reported the item had not been reviewed by the WG. Although the WWMA heard no additional comments, members weren't clear on the purpose of the proposed exemption or its potential impact. Without input from the MDMD WG, the WWMA was reluctant to recommend additional action on the item. Consequently, the WWMA recommended the item be designated as a Developing item on the NCWM S&T Committee's Agenda and recommended the submitter seek input from the MDMD WG to obtain the benefit of that group's expertise.

At the NEWMA 2018 fall Interim Meeting, Mr. Walt Remmert (Pennsylvania) stated that these systems are not reliable, and more data is needed. The NEWMA S&T Committee believes the submitter should further develop this item, including adding supporting data and consulting with the MDMD WG. Consequently, NEWMA recommended this item be designated a Developing item.

At the SWMA 2018 fall Annual Meeting, Mr. Suiter commented that this item was not brought through the workgroup and believed that would be the appropriate place to develop this item. The SWMA has no expertise in this field to make a decision as to how to handle this proposal, and therefore agreed with Mr. Suiter's comments. The SWMA recommended the item be Withdrawn.

At the CWMA 2018 fall Interim Meeting, Mr. Suiter stated this item was not reviewed by the MDMD WG and recommended its withdrawal. The CWMA recommended this item be Withdrawn.

Additional letters, presentations, and data may have been part of the Committee's consideration and were posted on the NCWM website during the time this item was on the Committee's agenda. To the extent possible, comments and positions from such documents have been summarized in the Committee's report along with comments heard during the Committee's hearings.

TNS – TRANSPORTATION NETWORK SYSTEMS

TNS-1 W A.4. Type Evaluation.

Source:
NIST OWM (2019)

Purpose:
Facilitate the evaluation of devices/systems submitted to NTEP for type and to exclude those devices/systems not complying with all requirements contained in that code from the NTEP evaluation process.

Item Under Consideration:
Amend NIST Handbook 44 Transportation Network Systems Code as follows:

> **A.4. Type Evaluation. – The National Type-Evaluation Program (NTEP) will accept for type evaluation only those devices that comply with all requirements of this code.**

Background/Discussion:
The addition of paragraph A.4. "Type Evaluation" is needed to facilitate the application of the NIST Handbook 44 TNMS Code during type evaluation by NTEP expressly to those devices/systems in compliance with all requirements of that code. The proposal to add the new paragraph, A.4. to NIST Handbook 44, Section 5.60. is submitted to amend the Code to conform with the protocol for the type evaluation process as specified by NTEP and aligns this code with multiple other NIST HB 44 Codes that have a similar reference.

OWM personnel were unable to attend the 2019 NCWM Interim Meeting because the Department of Commerce was part of the Federal Government that was closed as part of the partial government shutdown in early 2019 due to a lack

This publication is available free of charge from: https://doi.org/10.6028/NIST.SP.1253

This publication is available free of charge from: https://doi.org/10.6028/NIST.SP.1253

of appropriations. In written analysis shared with the Committee in advance of the Interim Meeting, OWM provided the following with respect to this item:

> OWM recognizes that the Transportation Network Measurement Systems (TNMS) Code has been adopted as a tentative code and that the intent of this status is to apply these requirements on a trial basis until such time that it is determined the code should be made permanent. OWM has also been advised that to facilitate the process for submitting applications for NTEP evaluations of this type of device, the addition of the proposed new paragraph A.4. "Type Evaluation" is needed. The addition of the proposed paragraph will provide notification to device manufacturers/developers that their device/system must comply with all requirements included in the TNMS Code for the application to be NTEP evaluated is accepted. This will serve to narrow the scope of devices that NTEP will accept applications for.
>
> OWM notes that comments heard at some regional weights and measures association meetings have suggested potential amendments to the language used; however, this same requirement is found in other NIST Handbook 44 codes and OWM believes that this language is appropriate and recommends its addition to amend the tentative TNMS Code.

During the 2019 NCWM Interim Meeting, comments were heard in support of this item from Mr. Kevin Schnepp (California) and Steve Timar (New York). Mr. Craig VanBuren (Michigan) questioned whether or not NTEP is performing evaluations of these systems. It was pointed out that the proposed statement to be added in the TNMS Code in this item has been included in other NIST HB 44 tentative codes. While acknowledging the language in this statement is used in other codes, Mr. Don Onwiler (NCWM) recommended the language be amended to clarify the intent.

During its work session, the Committee agreed to assign this item a Developing status.

During the Committee's 2019 NCWM Annual Meeting open hearings, Mr. John Barton (NIST OWM) provided an explanation of the proposal's origination and stated that the NTEP administrator had previously recommended the proposed language be added for NTEP purposes. Mr. Barton requested that the S&T Committee provide guidance on the proposed language and if the language should be added to the TNMS Code.

During the S&T Committee's work session, the committee could see no reason to add the proposed language to the Code and agreed to Withdraw the item.

Regional Association Comments:
At the WWMA 2018 fall Annual Meeting, Mrs. Tina Butcher (NIST OWM), submitter of the item, provided an overview of its purpose, noting that NTEP had identified this paragraph (which appears in a number of other codes) is missing from the EVFS code and noted it is needed to assist in the evaluation of devices submitted for NTEP evaluation. In its work session, the WWMA noted the language could use some improvement since it appears contradictory in nature; however, such changes should be recommended (in a separate proposal) across all codes that include this paragraph. The WWMA acknowledged the paragraph is intended to assist NTEP in applying the provisions of a tentative code when companies challenge the application of the code to their equipment. The WWMA heard no other comments on this item and recommends the item be designated as a Voting Item on the NCWM S&T Committee Agenda.

At the NEWMA 2018 Fall Interim Meeting, Mr. Mike Sikula (New York) during open hearings, reported that he strongly supported this item. NEWMA believes this item is fully developed and recommended this as a voting item.

At the NEWMA 2019 Spring Annual Meeting, Mr. Barton commented that this language has been confusing to some people even though it is the same language used in other codes for other devices. Mr. Sikula believes this item should have been assigned a voting status and recommended it be upgraded as such at the next opportunity. NEWMA recommended this item as developing on the NCWM S&T Committee agenda but that it be upgraded to voting status at the next available opportunity.

At the SWMA 2018 fall Annual Meeting, NIST commented that this item would allow systems to be tested by NTEP. Mr. Richard Suiter (Richard Suiter Consulting) commented that the language is confusing and should be clarified. The SWMA reported it understands that this language is used throughout NIST HB 44 in tentative codes and facilitates the submission of devices for NTEP evaluation and SMA recommended it move forward as a voting item.

At the CWMA: 2018 fall Interim Meeting, CWMA thinks the language may need to be reviewed for improvement but recommended this as a Voting item based on its inclusion in other codes.

At the CWMA 2019 spring Annual Meeting, the Committee received no comments on this item during open hearings. The CWMA recommended this as a Developing item.

Additional letters, presentations, and data may have been part of the Committee's consideration and were posted on the NCWM website during the time this item was on the Committee's agenda. To the extent possible, comments and positions from such documents have been summarized in the Committee's report along with comments heard during the Committee's hearings.

OTH – OTHER ITEMS

OTH-4 D Electric Watthour Meters Code under Development

Source:
NIST OWM (2016)

Purpose:

1) Make the weights and measures community aware of work being done within the U.S. National Work Group on Electric Vehicle Fueling and Submetering to develop proposed requirements for electric watthour meters used in submeter applications in residences and businesses;
2) Encourage participation in this work by interested regulatory officials, manufacturers, and users of electric submeters.
3) Allow an opportunity for the USNWG to provide regular updates to the S&T Committee and the weights and measures community on the progress of this work;
4) Allow the USWNG to vet specific proposals as input is needed.

Item Under Consideration:
Create a "Developing Item" for inclusion on the NCWM S&T Committee Agenda where progress of the USNWG can be reported as it develops legal metrology requirements for electric watthour meters and continues work to develop test procedures and test equipment standards. The following narrative is proposed for this item:

In 2012, NIST OWM formed the U.S. National Working Group on Electric Vehicle Fueling and Submetering to develop proposed requirements for commercial electricity-measuring devices (including those used in sub-metering electricity at residential and business locations and those used to measure and sell electricity dispensed as a vehicle fuel) and to ensure that the prescribed methodologies and standards facilitate measurements that are traceable to the International System of Units (SI).

In 2013, the NCWM adopted changes recommended by the USNWG to the NIST Handbook 130 requirements for the Method of Sale of Commodities to specify the method of sale for electric vehicle refueling. At the 2015 NCWM Annual Meeting, the NCWM adopted NIST Handbook 44 Section 3.40 Electric Vehicle Refueling Systems developed by the USNWG.

This publication is available free of charge from: https://doi.org/10.6028/NIST.SP.1253

This publication is available free of charge from: https://doi.org/10.6028/NIST.SP.1253

This Developing Item is included on the Committee's agenda (and a corresponding item is proposed for inclusion on the L&R Committee Agenda) to keep the weights and measures community apprised of USNWG current projects, including the following:

- The USNWG continues to develop recommended test procedures for inclusion in a new EPO 30 for Electric Vehicle Refueling Equipment along with proposed requirements for field test standards.

- The USWNG is continuing work to develop a proposed code for electricity-measuring devices used in sub-metering electricity at residential and business locations. This does not include metering systems under the jurisdiction of public utilities. The USNWG hopes to have a draft code for consideration by the community in the 2019 –.2020 NCWM cycle.

The USNWG will provide regular updates on the progress of this work and welcomes input from the community.
For additional information, please contact the Chairman or Technical Advisor listed under the Background information:

Background/Discussion:
This item has been assigned to the submitter for further development. For more information or to provide comment, please contact:

Electric Vehicle Refueling Subgroup:
Tina Butcher, Chairman
NIST Office of Weights and Measures
P: (301) 975-2196
E: **tbutcher@nist.gov**
or
Juana Williams, Technical Advisor
NIST Office of Weights and Measures
P: (301) 975-2196
E: **juana.williams@nist.gov**

Electric Watthour Meters Subgroup:
Lisa Warfield, Chairman
NIST Office of Weights and Measures
P: (301) 975-3308
E: **lisa.warfield@nist.gov**
or
Tina Butcher, Technical Advisor
NIST Office of Weights and Measures
P: (301) 975-2196
E: **tbutcher@nist.gov**

This item was submitted as a Developing item to provide a venue to allow the USNWG to update the weights and measures community on continued work to develop test procedures and test equipment standards within its Electric Vehicle Refueling Subgroup. This item will also serve as a forum in which to report work on the development of a proposed tentative code for electric watthour meters in residential and business locations by the USNWG's Electric Watthour Meters Subgroup and a placeholder for its eventual submission for consideration by NCWM.

Mrs. Tina Butcher (NIST OWM), Chairman of the USNWG on Electric Refueling & Submetering has continued to provide regular updates to the Committee on this work. See the Committee's 2016 through 2018 Final Reports for details.

During the 2018 NCWM Interim Meeting, no comments were heard on this item and the Committee agreed to maintain its "Developing" status. The Committee did not take comments during open hearings on Developing items at the 2018 NCWM Annual Meeting and agreed to allow only the submitter of a Developing item (or block of Developing items) to provide an update on the progress made to further develop the item(s) since the 2018 NCWM Interim Meeting. The Committee received an update on this item from Mrs. Tina Butcher (OWM), Chair of the USNWG on Electric Refueling & Submetering. See the 2018 NCWM S&T Committee Final Report for additional details.

OWM personnel were unable to attend the 2019 NCWM Interim Meeting due to the Federal Government shutdown in early 2019 due to a lack of appropriations; however, OWM provided written comments to the Committee on this item in the advance of the meeting, including the following update on this item:

- The Electric Watthour Meter Subgroup (EWH SG) of the USNWG on Electric Vehicle Fueling & Submetering has held multiple in-person and web meetings since the 2017 NCWM Annual Meeting.

This publication is available free of charge from: https://doi.org/10.6028/NIST.SP.1253

- The SG met in September 2017, November 2017, May 2018, and August 2018. All meetings included web-conferencing to allow those not able to attend in person to participate.
- The SG developed a proposed addition to NIST Handbook 130's Uniform Regulation for the Method of Sale (MOS) of Commodities (see Item MOS-8 on the L&R Committee's Agenda) to specify a method of sale for electrical energy sold through these systems and submitted the proposal to the four regional weights and measures association meetings in Fall 2018.
    - Three of the four regions recommend the MOS proposal on the L&R Agenda as a voting item, with the fourth abstaining due to lack of experience with these systems within the region.
- The SG continues work on a proposed code for EWH-type meters for NIST Handbook 44 and expects to have a draft ready for the 2020 NCWM cycle.
- OWM requests this item be maintained on the S&T Committee's agenda as a Developing Item while the SG finalizes its proposed HB 44 draft. OWM will continue to apprise the Committee of progress.
- At their Fall 2018 meetings, all four regional associations indicated support for maintaining this as a Developing item on the Committee's agenda.
- The SG will hold its next in-person meeting in February 2019 in Sacramento, CA. ***(Technical Advisor's Note:*** *This meeting was rescheduled to April 2019.)*
- Those interested in participating in this work please contact SG Chairman, Lisa Warfield, or Technical Advisor, Tina Butcher. Contact information is included at the beginning of this item.

At the 2019 NCWM Interim meeting, the Committee heard no comments on this item. At its work session, Committee members agreed with the submitter and the regional associations that this item should be assigned a Developing status.

During the Committee's 2019 NCWM Annual meeting open hearings, Mrs. Tina Butcher provided the committee with an update on the development of this item as follows:

- The Electric Watthour Meter Subgroup (EWH SG) of the USNWG on Electric Vehicle Fueling & Submetering has held multiple in-person and web meetings since the 2017 NCWM Annual Meeting.
- The SG met in September 2017, November 2017, May 2018, and August 2018. All meetings included web-conferencing to allow those not able to attend in person to participate.
- The SG developed a proposed addition to NIST Handbook 130's Uniform Regulation for the Method of Sale (MOS) of Commodities (see Item MOS-8 on the L&R Committee's Agenda) to specify a method of sale for electrical energy sold through these systems and submitted the proposal to the four regional weights and measures association meetings in Fall 2019.
    - Three of the four regions recommend the MOS proposal on the L&R Agenda as a voting item, with the fourth abstaining due to lack of experience with these systems within the region.
- The SG continues work on a proposed code for EWH-type meters for NIST Handbook 44 and expects to have a draft ready for the 2020 NCWM cycle.
- OWM requests this item be maintained on the S&T Committee's agenda as a Developing Item while the SG finalizes its proposed HB 44 draft. OWM will continue to apprise the Committee of progress.
- At their Fall 2019 meetings, all four regional associations indicated support for maintaining this as a Developing item on the Committee's agenda.
- The SG will hold its next in-person meeting in February 2019 in Sacramento, CA.
- Those interested in participating in this work please contact:
    - Subgroup Chairman, Ms. Lisa Warfield, (OWM)
        - Email: **lisa.warfield@nist.gov** or phone: (301) 975-3308

- Technical Advisor, Mrs. Tina Butcher, (OWM)
  - Email: **tbutcher@nist.gov** or phone: (301) 975-2196.

During the S&T Committee's work session the Committee agreed with retaining the Developing status of this item.

Regional Association Comments:
At the WWMA 2018 fall Annual Meeting, Mrs. Tina Butcher (NIST OWM) provided a status report on the work of the USNWG on Electric Vehicle Fueling and Submetering Electric Watthour (EWH) Meter Sub Group, noting the EWH SG hopes to have a draft NIST HB 44 code on EWH Code for consideration by the weights and measures community in fall 2019. This item is included to keep the community apprised of this work; the SG welcomes input and participation. WWMA heard no comments or opposition to the item and recommends this be maintained as a Developing item on the NCWM S&T Committee's agenda.

At the NEWMA 2018 fall Interim Meeting, the Committee heard no comments during open hearings. Referring to comments from NIST OWM at the WWMA, the Electric Watthour Meter Subgroup hopes to have a draft code for consideration for fall of 2019. NEWMA recognizes that there is work currently being completed on this item and recommended this as a Developing item.

At the NEWM 2019 spring Annual Meeting, comments on this item (OTH-4) were heard with the Laws and Regulations Committee's (L&R) item MOS-8. In consideration of the comments received, NEWMA recommended this item remain Developing.

At the SWMA 2018 fall Annual Meeting, a representative of the USNWG EVFS said they expected completion of a tentative code by the 2020 cycle. The SWMA recommended maintaining this item a Developmental item until a Code is developed.

At the CWMA 2018 fall Interim Meeting, the Committee received no comments during open hearings. CWMA recommended this as a developing item and appreciates the work of NIST OWM in developing this item.

At the NEWMA 2019 spring Annual Meeting, Mr. Charlie Stutesman (Kansas) asked for an update from the USNWG. Ms. Lisa Warfield, (NIST OWM), reported that there should be an update available in the Fall.

Additional letters, presentations, and data may have been part of the Committee's consideration and were posted on the NCWM website during the time this item was on the Committee's agenda. To the extent possible, comments and positions from such documents have been summarized in the committee's report along with comments heard during the Committee's hearings.

OTH-5 V Appendix D – Definitions: Batch (Batching)

(This item was returned to Committee.)

Source:
Kansas (2018)

Purpose:
To clarify when batching is a metrologically significant event.

Item Under Consideration:
Amend NIST Handbook 44, Appendix D. Definitions as follows:

This publication is available free of charge from: https://doi.org/10.6028/NIST.SP.1253

This publication is available free of charge from: https://doi.org/10.6028/NIST.SP.1253

batch (batching) – The combining or mixing of two or more materials or ingredients using weighing and/or measuring devices or systems to produce a finished product whose quantity is determined from those weights and/or measurements.

(Added 20XX)

Background/Discussion:
When batching occurs during and as part of the weighing or measuring process special considerations should be made to ensure equity is preserved. This definition will help manufacturers, users, and regulators determine when batching is metrologically significant.

Batch or batching are terms used to define devices in Sections 2.20., 3.36., and in several definitions in Appendix D yet there is no guidance for the regulatory official to determine what constitutes a "batch" or "batching" operation. Section 2.20. Scales has a specification, S.1.2. Value of Scale Division Units, and a tolerance, T.3. Sensitivity Requirement, Equilibrium Change Required. (c) Scale with a Single Balance Indicator and Having a Nominal Capacity of 250 kg (500 lb) or Greater., that are applied differently to batching scales. Section 3.36 Water Meters has a specification, test procedure, and user requirement that are specifically for batching meters. Having a definition will promote consistency in the way the devices are evaluated.

To many weights & measures officials, it may seem obvious what is implied by the terms batch or batching. As the number of devices that don't conform to the common conception of what a batching device is increases, there is a greater need for defining what the term means.

In 2018, the Committee agreed to replace the definition of batch (batching) in the original proposal submitted by Kansas with an amended version developed by Kansas and supported by Mr. Henry Oppermann (Weights and Measures Consulting, LLC)

The following definition represents the original version of the definition that was replaced by the Committee in 2018.

batch (batching). – The separate weighment or measurement of two or more products consecutively, using the same load receiving or measuring element, without emptying or re-zeroing the device between weighments or measurements. Batching may be performed by many kinds of devices including but not limited to Scales and Automatic Bulk Weighing Systems.

The Following definition represents the version the Committee agreed as replacement for the original version in 2018.

batch (batching) – The combining or mixing of two or more materials or ingredients using weighing and/or measuring devices or systems to produce a finished product whose quantity is determined from the summation of those weights and/or measurements. 22

(Added 20XX)

See the 2018 NCWM S&T Committee Final Report for additional details.

OWM personnel were unable to attend the 2019 NCWM Interim Meeting because the Department of Commerce was one of the agencies that were closed as part of the partial government shutdown in early 2019 due to a lack of appropriations. In written comments and recommendations provided to the Committee in advance of the Interim Meeting, OWM provided the following with respect to this item:

- OWM believes that the definition proposed in this item is an appropriate description of the process of batching and we appreciate the submitter's efforts in its development. This process, however, is not dependent on any particular type of weighing/measuring device and in many batching operations, generic weighing/measuring devices are incorporated that may also be used in a variety of other applications. The design or available features offered by a particular device may be a factor in determining whether that device is suitable for use in any particular application. However, OWM believes that the weighing/measuring device performance should be evaluated using existing requirements and tolerances that are not dependent on the device's use in a batching system.

This publication is available free of charge from: https://doi.org/10.6028/NIST.SP.1253

- The submitter of this item has stated that establishing a definition for batch/batching will promote consistency in the manner in which devices used in that application are evaluated. OWM notes however, that any weighing device used in a batching operation would be appropriately evaluated based upon existing requirements and procedures that have already been accepted and adopted into NIST HB 44. The definition of the term "batching" does not define any particular device and OWM questions how this definition will promote consistency in the way these generic devices are evaluated.
- The submitter cites two sections of the NIST HB 44 Scales Code that explicitly address batching scales and specify requirements and tolerances for scales that are used for this purpose. OWM recognizes these two paragraphs in HB 44 Scales Code as archaic requirements that address particular types of weighing devices that are generally considered outmoded and possibly obsolete.

  OWM acknowledges that the definition proposed in this item would be viewed by some to accurately describe the batching process. What isn't understood is how the definition will assist regulators and others in consistently evaluating these systems. OWM also questions the benefit of the definition as purported by the submitter that it will "help manufacturers, users, and regulators determine when batching is metrologically significant." To ensure that OWM's analysis is complete and no technical points have been overlooked, OWM would like a more complete explanation of the purpose of this proposal. We note too there are no references to device code(s) included in this proposed definition which prompts the question, in which codes is this proposed definition intended to apply?

During the 2019 NCWM Interim Meeting the Committee heard comments from Mr. Jim Pettinato (TechnipFMC) who stated that there is at least one device that uses a *calculation* of the values measured when determining the total of a batching operation not a *summation* of those values. He indicated he would be in favor of moving the item forward with a voting status if the words "the summation of" were removed.

The Committee agreed to delete the wording "the summation of" from the proposal and assign a Voting status to this item using this latest draft as shown in the Item Under Consideration.

During the NCWM Annual Meeting, the Committee received the following comments on this item: Mr. Russ Vires (Mettler Toledo LLC) speaking on behalf of SMA stated that the SMA opposes this item because batching is an application; not a device type. Mr. Minnich (Kansas), the submitter agreed with the SMA. Mr. Minnich stated that the item was developed in part due to the proposed and subsequently adopted batching systems definition. He said that maybe the definition is not needed but there seems to be conflicting ideas of what batch or batching means and that having a definition would help jurisdictions interpret this application uniformly. Mr. Dmitri Karimov (Liquid Controls) speaking on behalf of MMA, opposes the item because batch is used to describe other processes that don't combine ingredients or commodities. There would be a conflict in the definition for batching meters that measure only water. Mr. Rick Harshman, (NIST OWM), stated that OWM opposes this definition for several reason stated in their analysis that included the following:

- Batching is an application not a device type because no special device type is needed to batch.
- Those devices used to batch can be properly evaluated utilizing current handbook requirements.
- The references to batching in the handbook are believed to be obsolete.
- It is unclear how this definition would help jurisdictions determine which HB 44 code to apply for devices used in batching operation.
- The definition proposed is similar to the definition for batching systems added to the handbook in 2018,
- NIST would like a more detailed explanation as to why this definition is necessary.
- The proposed definition doesn't include any references to the HB 44 sections in which it would apply.

Charlie Stutesman (Kansas) stated that he supports this item because, as a stockman, he buys feed that is sold by the individual commodity/ingredient and it is important to make sure it is weighed correctly. Mr. Stutesman agrees that it may need some tweaking; but would like to see it move forward.

This publication is available free of charge from: https://doi.org/10.6028/NIST.SP.1253

During the S&T Committee's work session the Committee made no additional changes to the Item and agreed to present it for vote.

Regional Association Comments:
At the WWMA 2018 fall Annual Meeting, Mr. Loren Minnich (Kansas), submitter of the item, reviewed the history and intent of the item. Mr. Richard Suiter (Richard Suiter Consulting) spoke in support of the proposal. Mr. Lou Straub (Fairbanks), speaking on behalf of the SMA commented that SMA does not support the item because these are not commercial devices. During its work session the WWMA discussed the item and acknowledged different jurisdictions treat devices used in these applications in different ways. The WWMA recommends the item be designated as a Voting item on the NCWM S&T Committee's agenda.

At the NEWMA 2018 fall Interim Meeting, the Committee received no comments during open hearings. however, it was noted that the Scale Manufacturers Association (SMA) provided written comments in opposition of this item. NEWMA believes that as written, there will not be agreement between the SMA and submitter of the item. NEWMA would like to see if this item could be further developed to gain a more general agreement on its usefulness and recommended this as a Developing item.

At the NEWM 2019 spring Annual Meeting, a single comment was heard from Mr. Vires, speaking on behalf of the SMA reported the SMA opposes the item on the basis that batching is an application and not a device type. NEWMA recommended this as a Voting item.

At the SWMA 2018 fall Annual Meeting, the SMA commented that these were not commercial devices. Mr. Suiter echoed his comments from earlier meetings that the devices were commercial, and he supported the item. A representative of Kansas stated the devices should be considered commercial and believed it was fully developed. The SWMA believes this item to be fully developed and recommended it as a Voting item.

At the CWMA 2018 fall Interim Meeting, Mr. Minnich the submitter of this item reported this item is fully developed and ready for voting. Mr. Richard Suiter agrees with the submitter. CWMA feels this item is fully developed and recommended this as a voting item.

At the CWMA 2019 spring Annual Meeting, Mr. Vires, speaking on behalf of the SMA, stated that SMA opposes this item. The CWMA recommended a Voting status for this item

Additional letters, presentations, and data may have been part of the Committee's consideration and were posted on the NCWM website during the time this item was on the Committee's agenda. To the extent possible, comments and positions from such documents have been summarized in the committee's report along with comments heard during the Committee's hearings.

Ms. Rachelle Miller, Wisconsin | Committee Chair
Mr. Loren Minnich, Kansas | Member
Mr. Josh Nelson, Oregon | Member
Mr. Brad Bachelder, Maine | Member
Mr. Jason Glass, Kentucky | Member
Mr. Luciano Burtini, Measurement Canada | Canadian Technical Advisor
Mr. Rick Harshman, NIST, OWM | NIST Technical Advisor
Mr. Darrell Flocken, NCWM | NTEP Technical Advisor

Specifications and Tolerances Committee

This publication is available free of charge from: https://doi.org/10.6028/NIST.SP.1253

THIS PAGE INTENTIONALLY LEFT BLANK

This publication is available free of charge from: https://doi.org/10.6028/NIST.SP.1253

Professional Development Committee (PDC)

2019 Final Report

Mr. Gene Robertson, Committee Chair
Mississippi

INTRODUCTION

The PDC will address the following items in Table A during the Interim Meeting. Table A identifies the agenda items by reference key, title of item, page number and the appendices by appendix designations. The first four digits of an item's reference key are assigned from the Subject Series List. The acronyms for organizations and technical terms used throughout the agenda are identified in Table B. In some cases, background information will be provided for an item. The fact that an item appears on the agenda does not mean it will be presented to National Conference on Weights and Measures (NCWM) for a vote. The Committee will review its agenda and may withdraw some items, present some items for information meant for additional study, issue interpretations, or make specific recommendations for change to the publications identified which will be presented for a vote at the Annual Meeting. The Committee may also take up routine or miscellaneous items brought to its attention after the preparation of this document. The Committee may decide to accept items for discussion that are not listed in this document, providing they meet the criteria for exceptions as presented in Section H of the introductions to National Institute of Standards and Technology (NIST) Handbook 130 (2019), "Uniform Laws and Regulations in the Areas of Legal Metrology and Engine Fuel Quality," or NIST Handbook 133 (2019), "Checking the Net Contents of Packaged Goods." The Committee has not determined whether the items presented will be Voting or Informational in nature; these determinations will result from their deliberations at the Interim Meeting.

An "Item Under Consideration" is a statement of proposal and not necessarily a recommendation of the Committee. Suggested revisions are shown in **bold face print** by ~~**striking out**~~ information to be deleted and **underlining** information to be added. Requirements that are proposed to be nonretroactive are printed in ***bold faced italics***.

All sessions are open to registered attendees of the conference. If the Committee must discuss any issue that involves proprietary information or other confidential material; that portion of the session dealing with the special issue may be closed if (1) the Committee Chair or, in their absence, the Chairman-Elect approves; (2) the Executive Director is notified; and (3) an announcement of the closed meeting is posted on or near the door to the meeting session and at the registration desk. If possible, the posting will be done at least a day prior to the planned closed session.

Note: It is policy to use metric units of measurement in publications; however, recommendations received by NCWM technical Committees and regional weights and measures associations have been printed in this publication as submitted. Therefore, the report may contain references to inch-pound units.

This publication is available free of charge from: https://doi.org/10.6028/NIST.SP.1253

Subject Series List

Table A
Table of Contents

Table B
Glossary of Acronyms and Terms

Acronym	Term	Acronym	Term
ADDIE	Analysis, Design, Development, Implementation, and Evaluation	NEWMA	Northeastern Weights and Measures Association
ANSI	American National Standards Institute	NIST	National Institute of Standards and Technology
BOK	Body of Knowledge	OWM	Office of Weights and Measures
CWMA	Central Weights and Measures Association	PDC	Professional Development Committee
ISO	International Standardization Organization	RSA	Registered Service Agents
ICE	Institute for Credentialing Excellence	SME	Subject Matter Expert
NCWM	National Conference on Weights and Measures	SWMA	Southern Weights and Measures Association
		WWMA	Western Weights and Measures Association

Details of All Items
(In order by Reference Key)

EDU – EDUCATION

EDU-1 I Professional Certification Program

The NCWM presently has six professional certification exams and two basic competency exams. The certification exams include Retail Motor Fuel Dispensers, Vehicle-Tank Meters, Small Capacity Scales, Medium Capacity Scales, Large Capacity Scales, and Basic Package Checking. The competency exams include Basic Weighing Devices and Basic Liquid-Measuring Devices. Professional certifications must be renewed every five years. The NCWM is implementing a process to notify candidates whose certificates are expiring each quarter.

At the 2018 Annual Meeting, the Certification Coordinator reported on progress on the LPG Liquid Measuring exam. He announced that work was progressing with NIST OWM to implement TP-27, a product of the API, ASTM and Gas Processors Association. TP-27 provides an electronic algorithm for computing temperature corrections to liquid volume that supersedes ASTM Table 24. The work with OWM also corrects minor errors in another table (Table 2) used to calculate uncompensated (gross) errors. OWM used the new tables in training they provided in June in Ohio, and they plan to make a broad distribution of the new tables shortly. States will not have to make procedural changes to calculations or forms; just substitute the new tables for the old ones, i.e. new Table 24E for Table 24 and new Table 2 for old Table 2. The NCWM exam will use the new OWM tables and plans to publish them with the exam announcement so people can become familiar with them before taking the exam.

Work is also progressing on the exam for precision scales. These are predominantly Class 1 and Class II devices used in pharmacy, jewelers, and cannabis applications. After that the present priority list has price verification as the next exam in the pipeline. The Committee encourages dialog on the priorities for future development of exams. Please let the Committee know what areas should be getting priority.

The NCWM Board has approved the rules for candidates and proctors. Proctoring is a vital component of any future plans to get our certification program accredited. Executive Director, Don Onwiler has worked with counsel to create legal terms of agreement for proctors which has been sent to states so they can begin selecting proctors. The Board decided to send a notice to state directors allowing 30 days for states to get their proctors signed up. After the 30 days, all exams require a proctor. With proctoring in place, the NCWM can begin hosting the basic competency exams. Under the proctoring agreement the proctor's organization will provide the computer access and ensure details in the proctoring agreement are met. Only materials authorized in the exam announcement will be allowed and these will be collected before the candidate leaves the room.

The process for taking an exam will still require the candidate to log in with their credentials. However, the candidate will only get access to the exam after the proctor logs in with their credentials. The candidate may still log in without a proctor to view their exam history and to reprint certificates. Candidates should take care to retain their credentials for this purpose.

Since the NCWM Annual Meeting, a few additional changes had to be made to the proctoring rules. These changes attempt to accommodate states that are proctoring the exam for multiple candidates all at the same time. This can create hardships for the proctoring organization in that they would have to have multiple copies of the allowed reference materials, like NIST Handbooks 44 or 133. The NCWM Executive Director has worked out a compromise that allows the use of an electronic version of the reference materials prepared by NCWM and have this accessible on the computer used to take the exam. Alternatively, they could print hard copies of the pdf file for candidates to use during the exam. The pdf file for Retail Motor Fuel Devices, for example, would include NIST Handbook 44 Introduction, General Code, LMD Code, and Appendices A, C, and D. These pdf files will be accessible through the exam announcement and candidates may download the files to practice with them prior to taking the exam.

This publication is available free of charge from: https://doi.org/10.6028/NIST.SP.1253

This publication is available free of charge from: https://doi.org/10.6028/NIST.SP.1253

In addition, the NCWM has decided to create two tiers of proctors. The first-tier proctor may proctor only basic competency exams for either public sector or private sector candidates. These proctors will be permitted to be direct supervisors of the public sector candidates, which is not permitted in the rules originally proposed for professional certification. The second tier may proctor both basic competency exams and professional certification exams. These proctors may not be direct supervisors of the candidates as originally specified in the proctoring rules.

At its spring meeting, the Board reviewed the proposed exit survey questions prepared by the Committee to get feedback on the certification exams. The Committee met during the NCWM Annual Meeting to respond to the Board's concerns regarding the length of the survey and necessity of specific questions. The Committee streamlined the survey and hopes the survey will be implemented in the near future. After taking an exam, the plan is to provide the candidate with a link to take the survey, and a link to the survey from the certification section of the NCWM website.

Status of Current Tests

The NCWM has issued 1,042 professional certificates from the inception of the Professional Certification Program to September 30, 2018. Of the certificates issued, eleven have been issued to individuals in the private sector (three for small scales, two for package checking, and one for retail motor-fuel dispensers). The balance of the certificates has been issued to regulators. It is important to note that some of the early certificates have reached their 5-year expiration. Those who earned certificates over five years ago will need to seek recertification. The Committee is working with NCWM staff to alert certificate holders prior to expiration. Both the Committee and NCWM are hopeful this will help facilitate with recertification. The NCWM Executive Director has advised the Committee he will work with staff to begin notifying expiring certificates holders several months in advance. This would allow certificate holders time to prepare before retaking the exams.

Number of Certificates NCWM has Issued as of the end of Fiscal Year 2017/18 (September 30) 2018)

	FY10-11	FY11-12	FY12-13	FY13-14	FY14-15	FY15-16	FY16-17	FY17-18
Exams Pass	44	94	105	62	198	140	142	257
Cumulative	44	138	243	305	503	643	785	1,042

Certification (posted)	Certificates
RMFD (5/2010)	364
Small Scales (8/2012)	249
Package Checking (8/2012)	167
Medium-Capacity Scales (4/2015)	112
Large-Capacity Scales (4/2015)	74
Vehicle-Tank Meters (4/2015)	76

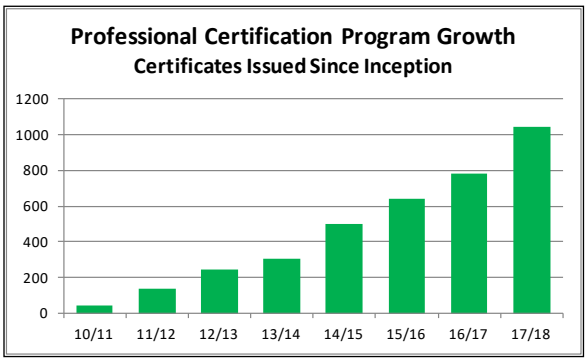

The following map includes the states with individuals holding an active certificate in one or more disciplines. Please note that the eleven active certificates issued to private sector individuals are included in these figures, e.g. the three certificates in Arkansas are private sector individuals. This data only includes certificates which have not expired as of September 30, 2018.

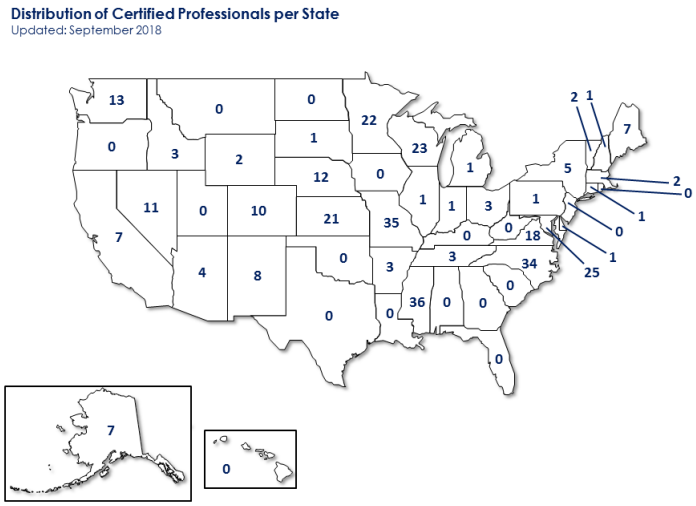

The list below shows those states with the highest utilization of the program. The table values include activity since program inception and may include expired certificates. The Committee applauds these states and encourages increased use of the certification program nationwide.

State	Certificates	State	Certificates
Minnesota	152	Maine	26
Missouri	143	New Mexico	23
Maryland	77	Nevada	22
Virginia	70	New York	19
Wisconsin	67	Colorado	15
Mississippi	53	Connecticut	15
North Carolina	50	Indiana	13
Washington	50	Ohio	13
California	41	Private	12
Kansas	40	Idaho	11
Alaska	35	Massachusetts	11
Nebraska	33		

At the 2019 NCWM Interim Meeting, it was announced by Mr. Gene Robertson (Committee Chair) that Mr. Ross Andersen (Certification Coordinator) would be stepping down at the end of the NCWM Annual Meeting in July. Mr. Jerry Buendel (Washington, retired) will take over the position. Mr. Buendel was contacted this past October to succeed Mr. Andersen and has been working closely with Ross and NCWM office to make it a smooth transition.

Mr. Andersen reported there were minor discrepancies between two databases that contain the data on professional certifications. One database is maintained by the test site electronically based on exams taken, and the other is maintained by NCWM staff manually. Shortly after the NCWM Interim Meeting the Coordinator worked with NCWM staff to find the errors and correct them. Several entries on the test site were not actual exams taken by candidates but rather by staff to evaluate the exam deployment. There were a small number of data entry errors or missing entries in the manual NCWM database that were also corrected. The two databases are now synchronized up to the end of fiscal year 2017/18. The data reported in the annual report and in the charts above reflect the corrected figures. This synchronization will become a part of the annual program maintenance in the future.

At the 2019 NCWM Annual Meeting, Mr. Tim Chesser (Arkansas) suggested the Committee investigate ways to encourage/assist states not yet providing proctors to do so. It was suggested by Mr. Buendel that alternate sources for

This publication is available free of charge from: https://doi.org/10.6028/NIST.SP.1253

This publication is available free of charge from: https://doi.org/10.6028/NIST.SP.1253

proctoring, e.g., commercial 'learning centers, could be utilized. Mr. Ken Ramsburg (Maryland) voiced support for looking into this approach. Mr. Paul Floyd (Louisiana) suggested that existing government testing facilities (e.g., civil service exams) could also provide examples of ways to provide proctored exams. Mr. Jim Willis (New York) expounded on that thought, suggesting state associations may be another resource.

Mr. Don Onwiler (NCWM Executive Director) informed the group that the survey as most recently submitted to the Board by the PDC was accepted. The survey will include two free-form optional entries for feedback, one for the exam itself and one for the process of taking the exam. The NCWM staff will review the responses and provide feedback to the PDC to the PDC/Certification Coordinator.

Regional Association Comments:
At the WWMA 2018 Annual Meeting, the WWMA PDC heard no comments during open hearings. The WWMA fully supports the efforts of the NCWM PDC in developing additional exams, and the administration and improvement of the current exams.

At the NEWMA 2018 Interim Meeting, there were supportive comments for the Professional Certification program to move forward with the precision scale certification exam. With more states adopting the sale of cannabis there will be a growing need for proficiency in this area.

At the SWMA 2018 Annual Meeting, the Chairman informed the membership that since the proctoring started September 1, the process is working well. No other comments were received.

At the CWMA 2018 Interim Meeting, no comments were heard.

EDU-2 I Training

The purpose of this item is to share best practices and approaches to training in response to the broad training needs of weights and measures jurisdictions and to serve as a link to various training materials on the web.

Ms. Tina Butcher (NIST OWM) has continued to provide updates on training provided to the weights and measures community by NIST OWM. At the 2018 NCWM Annual Meeting, the Committee agreed that OWM could simplify these reports by reporting activities based on the calendar year

NIST OWM personnel were unable to attend the 2019 NCWM Interim Meeting due to the Federal Government shutdown in early 2019 due to a lack of appropriations. However, NIST OWM provided content for the Committee's Interim Report regarding NIST OWM training conducted in calendar year 2018. This is summarized below followed by a listing of upcoming OWM training for the remainder of 2019 and the first part of 2020 is included below for reference.

NIST OWM Training Conducted in 2018			
Area/Course Name	**Start Date**	**Location**	**Number ofStudents**
Laboratory Metrology			
Advanced Mass Seminar	08/13/18	Gaithersburg, MD	6
Balance & Scale Calibration Uncertainties	01/09/18	Gaithersburg, MD	10
Fundamentals of Metrology	02/05/18	Gaithersburg, MD	12
	02/12/18	Gaithersburg, MD	12
	04/16/18	Gaithersburg, MD	11
	06/11/18	Gaithersburg, MD	11

This publication is available free of charge from: https://doi.org/10.6028/NIST.SP.1253

NIST OWM Training Conducted in 2018			
Area/Course Name	**Start Date**	**Location**	**Number ofStudents**
	05/14/18	Gaithersburg, MD	9
	10/29/18	Gaithersburg, MD	8
Mass Metrology Seminar	10/15/18	Gaithersburg, MD	9
Selecting Field Standards and Hoisting, General Safety	05/08/18	Saratoga Springs, NY	16
	05/22/18	Springfield, IL	42
Volume Metrology Seminar	06/04/18	Gaithersburg, MD	7
Regional Measurement Assurance Programs			
MidAmerica Measurement Assurance Program	10/01/18	St. Paul, MN	32
Northeastern Measurement Assurance Program	09/10/18	Montpelier, VT	17
Southeastern Measurement Assurance Program	04/30/18	Biloxi, MS	24
Southwestern Assurance Program	09/17/18	Oklahoma City, OK	17
Western Regional Assurance Program	05/07/18	Salt Lake City, UT	16
Info Hours & Other			
State Lab Workload Survey	01/09/18	Web-based	37
Statistics for Metrology Work Group	01/23/18	Web-based	24
ISO/IEC 17025 – 2017 Edition	01/30/18	Web-based	59
Procedure Updates	02/27/18	Web-based	49
Publication Reviews	03/27/18	Web-based	41
Measurement Assurance Assessments	06/19/18	Web-based	67
Webinars			
Basic Uncertainty Concepts	01/18/18	Web-based	11
Calibration Certificate Evaluation	02/01/18	Web-based	4
Conducting an Effective Management Review	02/15/18	Web-based	10
Contract Review	08/09/18	Web-based	7
Calibration Method Validation	02/22/18	Web-based	15
Document Control and Record Keeping	08/30/18	Web-based	9
Internal Auditing Best Practices	03/01/18	Web-based	7
	10/18/18	Web-based	4
Measurement Systems for Legal Metrology	08/01/18	Web-based	8
	11/07/18	Web-based	4
Software Verification & Validation	03/15/18	Web-based	9

This publication is available free of charge from: https://doi.org/10.6028/NIST.SP.1253

NIST OWM Training Conducted in 2018			
Area/Course Name	**Start Date**	**Location**	**Number ofStudents**
State Laboratory Annual Submission Process	09/06/18	Web-based	62
Packaging & Price Verification			
NIST HB 133 – Checking the Net Contents of Packaged Goods, Volumetric Measurement	02/02/18	San Diego, CA	12
NIST Handbook 130 – Uniform Packaging and Labeling Regulations	3/12/18	Orange County, CA	22
	06/05/18	Cleveland, OH	16
NIST HB 133 – Checking the Net Contents of Packaged Goods, Basic	3/26/18	Lebanon, MO	19
	04/16/18	Montgomery, AL	16
	05/14/18	Plantation, FL	18
	10/22/18	Baton Rouge, LA	16
	11/05/18	Needham Heights, MA	11
NIST Handbook 130 – Price Verification	02/09/18	San Diego, CA	15
	05/18/18	Plantation, FL	21
	10/26/18	Baton Rouge, LA	23
Legal Metrology Devices			
Compressed Natural Gas Retail Motor-Fuel Dispensers	04/16/18	Sacramento, CA	16
Liquefied Petroleum Gas Liquid-Measuring Systems	05/14/18	Sacramento, CA	24
	06/11/18	Reynoldsburg, OH	19
Livestock and Animal Scales	04/10/18	Harrisonburg, VA	14

NIST OWM Training Scheduled for 2019 and 2020		
Area/Course Name	**Dates**	**Location**
Laboratory Metrology		
Advanced Mass Seminar	04/29/19 – 05/09/19	Gaithersburg, MD
Fundamentals of Metrology	03/04/19 – 03/15/19	Gaithersburg, MD
	03/11/19 – 03/15/19	Gaithersburg, MD
	08/19/19 – 08/23/19	Gaithersburg, MD
Fundamentals of Metrology – SIM Participants Only	03/18/19 – 03/22/19	Gaithersburg, MD
	08/19/19 – 08/23/19	Gaithersburg, MD
Mass Metrology Seminar	04/08/19 – 04/18/19	Gaithersburg, MD
	10/21/19 – 11/01/19	Gaithersburg, MD
Volume Metrology Seminar	08/12/19 – 08/16/19	Gaithersburg, MD

This publication is available free of charge from: https://doi.org/10.6028/NIST.SP.1253

Regional Measurement Assurance Programs		
Combined Regional Measurement Assurance Program	06/02/19 – 06/06/19	Lake Mary, FL
CRMAP-Tutorial-Certified Calibration Technician Prep	5/31/19 – 06/02/19	Lake Mary, FL
CRMAP-Tutorial-Assessing & Reporting Measurement Uncertainty	5/31/19 – 06/02/19	Lake Mary, FL
CRMAP-Tutorial- Selection, Cal, Use of Thermometers	5/31/19 – 06/02/19	Lake Mary, FL
CRMAP-Balance and Scale Calibration Uncertainties	5/31/19 – 06/02/19	Lake Mary, FL
Webinars		
Basic Uncertainty Concepts	04/24/19	Webinar
Calibration Certificate Evaluation (2-day session)	08/06/19 & 08/08/19	Webinar
Conducting an Effective Management Review	03/07/19	Webinar
	02/13/20	Webinar
Contract Review	08/15/19	Webinar
Document Control and Record Keeping	08/29/19	Webinar
Internal Auditing Best Practices	02/21/19	Webinar
	10/24/19	Webinar
	02/27/20	Webinar
Measurement Systems for Legal Metrology	06/12/19	Webinar
Software Verification & Validation – Part 1	04/11/19 & 04/25/19	Webinar
State Laboratory Annual Submission Process	09/12/19	Webinar
Packaging & Price Verification		
NIST HB 130 – Uniform Packaging/Labeling Regs	10/28/19 – 10/31/19	Avenel, NJ
NIST HB 133 – Checking Net Contents of Packaged Goods, Basic	04/01/19 – 04/04/19	Gaithersburg, MD
	04/15/19 – 04/18/19	Glendale, AZ
	10/16/19 – 10/17/19	Richmond, VA
Webinars		
NIST Handbook 130 – Price Verification	06/18/19	Webinar
NIST HB 130 – Overview Packaging\Labeling Reg	06/19/19	Webinar
Legal Metrology Devices		
Liquefied Petroleum Gas Liquid-Measuring Systems	06/24/19	Nashville, TN
Retail Motor-Fuel Dispensers, 3-Day Course (CWMA)	05/06/19	Canton, OH
Retail Motor-Fuel Dispensers, 3-Day Course (WWMA)	09/19	Park City, UT
Vehicle-Tank Meters & Loading-Rack Meters	06/10/19	Lawrence, KS

A complete list of upcoming OWM training events is available on the calendar of events on the OWM website at: **www.nist.gov/pml/weights-and-measures/about-owm/calendar-events.**

This publication is available free of charge from: https://doi.org/10.6028/NIST.SP.1253

At the 2018 Annual Meeting, Ms. Butcher (NIST OWM) noted that OWM has been asked by multiple Regional Weights and Measures Associations (Regionals) to offer training seminars in conjunction with their annual meetings. OWM welcomes and appreciates the opportunity to offer training in this venue and reach multiple jurisdictions at once. To assist in planning for training in 2019 and in developing materials for future courses, OWM has asked for feedback from each Regional. Drawing from its full list of training topics, OWM identified topics on which OWM is prepared to offer training at the 2019 Regional Meetings (and would lend themselves to the time constraints of a Regional) as shown below and distributed this list to each Region's main point of contact at the beginning of June.

Packaging and Labeling and Price Verification:	
	Price Verification Test Procedures (1-2 days)
	Uniform Packaging & Labeling Regulation (4 days)
	Uniform Packaging & Labeling Regulation – Overview (1 day)
	NIST Handbook 133 – Chapters 1 and 2, Gravimetric Testing (4 days)
	NIST Handbook 133 – Chapters 1 and 2, Gravimetric Testing – Overview (1 day)
Devices:	
	Livestock and Animal Scales (3 days)
	Medium-Capacity Scales (3 days)
	Retail Computing Scales (3 days)
	Retail Motor-Fuel Dispensers Short Course (3-1/2 days)
	Selection and Testing of Reference Scales (1 day)
	Vehicle and Axle-Load Scales (3 days)
	Vehicle-Tank Meters (3 days)

OWM hopes to identify one or two training topics that would be of interest to multiple Regionals to help maximize the use of its resources in preparing for the training. OWM is also seeking feedback from the Regionals and others on ideas for ***future*** topics that may be needed to assist jurisdictions with addressing changes in technology and marketplace practices.

OWM discussed these training options with the regions during their scheduled meetings Wednesday morning at the Annual Meeting. Mrs. Butcher also noted OWM would like to use a similar approach of obtaining regional input each year to help OWM better meet any requests for training by OWM that the regions might have.

At the 2019 NCWM Interim Meeting, it was requested that the Committee consider reviewing and potentially updating/reintroducing the old NIST OWM training modules. The Committee is not sure whether these modules are still available in digital form but will investigate.

Mr. Ross Andersen (retired) indicated that NIST has extensive training materials that we could leverage; requesting these materials from NIST may be beneficial.

The State of Kansas communicated some upcoming training they had planned; this training will cover both VTM and load rack training and will be held for 5 days starting June 10.

We were reminded of the NIST metrology training in Florida:

- Combined Regional Measurement Assurance Program (C-RMAP) Tutorial 1-4
    - May 31 – June 2, 2019

This publication is available free of charge from: https://doi.org/10.6028/NIST.SP.1253

- Combined Regional Measurement Assurance Program (C-RMAP)
    - June 2 – 6, 2019

Three states recommended that NCWM and NIST OWM consider joint development of training videos, and investigate funding from additional sources (grants, etc.).

NCWM 2019 Annual Conference: Christopher Guay (AMC, Procter & Gamble) asked if webinars or other NIST training could be made available to associate members or industry in general. Ms. Tina Butcher (NIST OWM) responded by indicating that that is already possible on an as-available basis.

Regional Association Comments:
At the WWMA 2018 Annual Meeting the WWMA PDC heard the following comments during open hearings:

- John Young (Yolo County, California) would like to have the following training offered by NIST at the WWMA Annual Meeting: Gravimetric testing for mass flow meters and liquid measuring devices such as CNG, LNG, Hydrogen, and bulk oil; electric vehicle charging stations; and training on how to select the proper master meter for different products.
- Ms. Tina Butcher (NIST OWM) would like the various regions to begin discussions as early as possible regarding training requests for the 2020 and beyond regional meetings. There are a limited number of NIST trainings courses that will fit into the schedule for a regional meeting, the NIST OWM would like each region to prioritize the type of trainings from the list currently offered by NIST. Other considerations would be equipment requirements available to conduct the training.
- Mr. Kipp Blauer (Nevada) would like precision scale training focused on scales used to weigh tobacco-like products. Training should be targeted on the practical use of the scales, rather than NTEP requirements.
- Ms. Tina Butcher (NIST OWM) stated that NIST, being a federal government agency, could not conduct training specifically related to the cannabis industry.
- Mr. Kevin Merritt (Idaho) would like training on gravimetric testing of bulk oil meters.
- Mr. Marco Mares (San Diego County, California) would also like to see a course on gravimetric testing.
- Cathy Fisher (Santa Barbara County, California) would like training on precision scales and package labeling. Cathy also mentioned that the 2018 Farm Bill now allows the growing of industrial hemp in all states with regulatory programs.
- Mr. Jerry Johnson (Wyoming) would like training on forklift scales.
- Ms Tina Butcher suggested the WWMA PDC committee poll the western region states to select the top three topics for training offered by NIST at the regionals.
- Stan Toy (Santa Clara County, California) wanted clarification as to whether gravimetric training currently offered by NIST would be applicable to the bulk oil and other device training requested by other jurisdictions. Tina responded that this training was focused on packaged products.
- Brett Gurney (Utah) would like training on audit trails

At the NEWMA 2018 Interim Meeting concerns were given regarding the ability to send multiple employees to out of state training due to budgetary issues. States can have different training qualifications for inspectors and sealers. Walt Remmert (Pennsylvania) voiced support and a desire for NIST to produce video training that can be easily accessed by jurisdictions. Videos on inspections and EPO'S would be valuable for jurisdictions to use. Related comments were made that this form of recorded on line education could reach many more inspectors than hands on training. Recommendations for Safety to be included in future training was supported. The Committee encourages NIST to explore the possibility of producing video trainings that can be made available to jurisdictions. The Committee would like to thank our NIST partners for their continued assistance with training and technical work.

At the SWMA 2018 Annual Meeting the Chairman informed the conference that NIST will use the top four or five

training topics from the list submitted by each of the regions for future training.

At the CWMA 2018 Interim Meeting a regulator requested that all NIST online training modules to be online and easily accessible.

EDU-3 I Instructor Improvement

NIST OWM has provided legal metrology training for weights and measures jurisdictions and industry for many years but does not have the resources to respond to the numerous training requests it receives. OWM has long recognized that there are many individuals with extensive legal metrology experience who have the skills needed to provide this type of training. OWM hopes to draw from this pool to develop trainers who can present schools with NIST, thus leveraging NIST resources; providing more timely classes; and providing a way to more broadly share the valuable expertise these individuals possess.

Several years ago, OWM renewed its efforts to develop trainers by providing a grant to the NCWM which is intended to pay travel costs of individuals to travel within their regions to conduct training and to participate in NIST training for trainers. This partnership has enabled NIST to bring in candidates for NIST-sponsored training such as "train the trainer" classes and to participate in NIST technical training schools. Through an application process, in collaboration with weights and measures directors and nominated training candidates, NIST has identified a group of people who are now working with NIST to develop the knowledge, skills, and abilities to work with NIST staff in presenting technical training schools. A number of candidates in the NIST Trainer Program have already served as co-instructors for NIST technical training schools and have done an excellent job. OWM sincerely appreciates the willingness of those trainers and their directors who have supported their participation to devote time to making these seminars successful.

NIST training seminars on field inspection topics are only held a limited number of times each year. This poses a challenge in sustaining regular interaction and involvement of NIST trainer candidates. NIST does not have the resources to develop and sustain the development of all the trainers it has invited to participate in the NIST trainer program activities and events held over the past several years; however, even if a candidate is not designated to participate as an instructor in a NIST seminar, they and their jurisdictions can benefit from the experience and the candidate can still provide valuable training in their jurisdiction and region.

A list of all people who have attended a NIST "Train the Trainer" class or associated event has been posted on the NCWM website. Many people on this list have attended NIST "train the trainer" events and workshops but have not served as co-instructors for NIST classes and, in some cases, have not attended NIST technical training schools in the areas in which they are interested in serving as trainers. Conversely, there are people on this list who have attended the workshops and NIST technical training seminars and have also served as co-instructors in NIST training seminars. Because of the variations in experience levels of individuals on this list and because OWM has not authorized anyone (external to NIST) to independently present "NIST" classes and is still refining the program infrastructure, confusion has arisen in the weights and measures community regarding classes that these individuals may present on their own. NIST and NCWM are considering how to best depict these listings to reflect the status of the trainers listed such that confusion can be avoided in the future.

OWM appreciates the strong support of the NCWM, the PDC, the volunteer trainers, and their administrators in continuing to develop the NIST Trainer Program. OWM will continue to provide the Committee with updates on its progress as well as continue to collaborate with and support the Committee in its work.

The Committee continues to hear comments from States expressing appreciation for the NCWM Professional Certification Program and the NIST Training Program. The Committee also heard favorable comments about the training materials and tools provided by NIST, including a video on testing retail motor-fuel dispensers (RMFDs). As noted in Item 410-2, the NIST video is divided into segments focusing on specific parts of the RMFD test procedure that can be used to supplement and enhance instructor-led training. The video can be accessed through OWM's home page or by going directly to the following link: **www.nist.gov/pml/wmd/lmdg/training-materials.cfm**.

This publication is available free of charge from: https://doi.org/10.6028/NIST.SP.1253

This publication is available free of charge from: https://doi.org/10.6028/NIST.SP.1253

The Committee has reiterated multiple times in the past that the responsibility for training employees rests with individual organizations (weights and measures jurisdictions and industry alike). While NIST and other training providers offer excellent sources of training and training materials, organizations must develop and manage their own training programs, including developing trainers; establishing individual development plans for employees; and identifying strategies for continually assessing and responding to training needs. The Committee recognizes that NIST OWM cannot possibly train all weights and measures inspectors in the country. The state and municipal jurisdictions have ultimate responsibility for training and qualifying their personnel. To fulfill this responsibility, jurisdictions should be making individual plans to maintain or bolster their training efforts. NIST OWM should be viewed as one vital resource to support that effort. The Professional Development Committee is another resource. The Committee has created and posted on its website, the "Body of Knowledge" to establish uniform learning objectives for weights and measures professionals. In addition, the Committee has posted a Model Field Training Program document on its website. This program outlines methods to evaluate and document training and offers guidance on training new inspectors and taking steps to ensure their ongoing development.

These initiatives require competent and qualified trainers and a centralized management plan within the jurisdiction. The Committee is continuing to work, in partnership with NIST OWM, to identify the basic competencies of those trainers and training managers so that jurisdictions can find the right people to manage and deliver training internally. It's not enough just to be technically competent in a subject area to be a good trainer or to effectively manage a training program. It takes other tools, such as:

- ability to assess employee competence and training needs,
- ability to create learning materials from technical material,
- ability to use adult learning techniques adapted to individual and group needs,
- ability to plan training activities and find appropriate training venues,
- ability to find creative ways to deliver training with tight budgets, and
- ability to adapt the overall training program to best serve jurisdiction goals

In 2015 OWM developed a NIST Instructor Training Program Instructor Competency Assessment and Feedback Instrument that can be used as a self-assessment tool by instructors and assist them in identifying and setting goals to strengthen and develop their skills as trainers. Included in this assessment tool is a broad list of competencies for trainers based on a model developed by the U.S. Department of Education (see **www.pro-net2000.org/CM/content_files/70.pdf** for details). For the purposes of serving as a NIST OWM trainer, only a subset of these competencies may be necessary, although some trainers participating in the NIST Trainer Program may be required to master more of them to meet broader training responsibilities within their own agencies. See past Committee reports for additional background.

As previously reported, NIST OWM is authorized by IACET to issue "Continuing Education Units" for certain training seminars and, as part of this authorization, there are certain provisions that an instructor must follow to meet these requirements. NIST Certificates and the accompanying CEUs can only be issued if these criteria are met; this includes ensuring that the material is presented consistent with the learning objectives and interpretations specified by NIST OWM and in the same time frame. OWM staff trainers have completed IACET training courses and are familiar with the procedures that OWM has implemented to ensure compliance with IACET-related requirements for NIST training courses. External trainers in the NIST Trainer Program must also understand these provisions. OWM has presented several short webinars to help its external trainers obtain the necessary training and will continue to seek opportunities to provide this training to those who have not yet completed it.

At the 2016 Annual Meeting, Ms. Butcher reported that NIST is making an additional $100,000 grant to NCWM to support travel and training events for the NIST Trainer program. OWM continues to work on formalizing the NIST Trainer Program. At the 2017 Annual Meeting, Ms. Butcher updated the Committee on progress on "Instructor Improvement" in the NIST Trainer Program. She noted that OWM is continuing to work on the infrastructure of the program, including documenting:

- Procedures for Selection, Evaluation, and Feedback to Instructors

- Instrument - Instructor Competency Assessment and Feedback – Overall
  - Based on US Dept. of Education model for overall development
- Instrument - Instructor Competency Assessment - specific courses
- Criteria for Developing Participants in NIST Instructor Training Program and Use of the NIST-NCWM Training Grant
- Instructor Agreement

She noted that OWM information shared this information with NCWM Board of Directors at their meeting May 2017 as a follow-up to discussions and a request at the Board's January 2017 Meeting. She noted that OWM is beginning to implement these tools with its external trainers and OWM has made continual adjustments to the assessment documents based on experience. For example, the instrument which is used to provide an overall assessment of a trainer's professional competencies can be used to help a trainer identify personal goals for improving their competencies as a trainer, including both those that NIST would require of its trainers and those that might be required of them in their own jurisdiction. However, the instrument proved overly complex for an individual learning event. Consequently, Georgia Harris (OWM) developed a scaled down version of the instrument that was tailored more toward individual learning events, but that still linked back to the overall competencies. This instrument has been used in at least two classes and a revised version will be used in courses coming up in fall 2017.

Ms. Butcher reported that 10 of OWM's 44 training sessions in 2016 included non-NIST instructors assisting in the NIST OWM classes. Travel for external trainers serving as co-instructors in these classes is funded using travel from a grant provided by NIST to NCWM. She expressed appreciation to NCWM for its continued assistance in administering the grant and helping make the process of getting the trainers to these courses as smooth as possible.

Ms. Butcher also reported that several instructor training webinars had been offered to external trainers, including webinars on Blooms Taxonomy; learning objectives; and the ADDIE model. She noted that one of NIST's external trainers audited a "Train-the-Trainer" course offered by the American Management Association and OWM is considering if this might be a course that could be used by prospective NIST instructors in their own personal development as trainers. Ms. Butcher noted that OWM is continuing to involve external trainers in its training efforts and has been increasing their responsibilities in these seminars. She emphasized the significant impact that the external trainers have had on the success of the NIST courses and expressed appreciation for the trainers who give of their time and expertise and the directors who allow the trainers time away to assist with these courses.

Since NIST was not in attendance at the Interim Meeting 2019, no updates were available. No comments were heard on this item.

At the NCWM 2019 Annual Conference, Ms. Julie Quinn (retired) suggested that NIST OWM consider allowing qualified individuals to take advanced NIST classes if proven capable by means other than passing a basic NIST exam. Ms. Rochelle Miller (Wisconsin) suggested that for example passing an NCWM professional certification in package checking could be a suitable alternate prerequisite for NIST advanced package checking training. NIST OWM indicated that they will discuss the possibility of alternate prerequisites.

Ms Michelle Wilson (Arizona) stressed the importance of allowing/providing external trainers and requested that those trained by NIST via the train-the-trainer program be certified as qualified trainers.

Regional Association Comments:
At the WWMA 2018 Annual Meeting the WWMA PDC heard no comments during the open hearings. The WWMA continues to support the ongoing efforts of the NIST/OWM Train the Trainer Program.

At the NEWMA 2018 Interim Meeting no comments were received. The Committee both supports and would like to thank our NIST partners for their continued work on improving the skills of trainers.

At the SWMA 2018 Annual Meeting and the CWMA 2018 Interim Meeting there were no comments received.

This publication is available free of charge from: https://doi.org/10.6028/NIST.SP.1253

This publication is available free of charge from: https://doi.org/10.6028/NIST.SP.1253

EDU-4 I Recommended Topics for Conference Training

The Board of Directors has charged the Committee with recommending appropriate topics for the technical sessions at future annual meetings. The Board of Directors asks the PDC to review and prioritize possible presentation topics and to submit those to the NCWM Chairman. The Chairman will coordinate with NCWM staff to secure presenters.

The following is a list of technical presentations made at the NCWM since 2009. Presentations given since 2010 are available at **www.ncwm.com/annual-archive**.

- Planning and Coordinating a National Market Place Survey (Ms. Rachelle Miller, Wisconsin 2017);
- The Life Cycle of Petroleum from Well to Retail (Mr. Prentiss Searles, API 2017);
- The United States Mint at Denver – Gold, Coins and Embezzlement (Mr. Thomas Fesing, 2016)
- Understanding Transportation Network Systems (Ms. Andrea Ambrose Lobato, Lyft and Mr. Bob O' Leary, Uber 2016)
- Regulatory Consideration for Legalized Marijuana (Ms. Julie Quinn, MN and Mr. Nick Brechun, Colorado 2016)
- Motor Oil Quality Violations (Mr. Tom Glenn, Petroleum Quality Institute of America, 2014);
- Making Sense of Electronic Receipts (Mr. Justin Hotard, Vice President and General Manager, NCR Corporation, 2014);
- LNG & CNG Motor Fuel – A Technical Briefing from Industry (Mr. Doug Horne, President CVEF, Mr. Zack Wester, Blu, Mr. Jeff Clarke, NGVA, 2014);
- Taximeter Technology Advancements (Mr. Matt Daus, International Association of Transportation Regulators, 2013;
- Advanced Vehicles and Fuel Quality (Mr. John M Cabaniss, Jr., Association of Global Automakers, 2013);
- Economic Justification and Demonstrating Value of Weights and Measures (Mr. Tim Chesser, Arkansas Bureau of Standards, 2012);
- Conducting Effective Marketplace Surveys and Investigations (Ms. Judy Cardin, Wisconsin Weights and Measures, 2012);
- Public Relations and Customer Service as Regulators (Mr. Doug Deiman, Alaska Division of Measurement Standards/ CVE, 2012);
- An Overview of Unit Pricing in the United States (Mr. David Sefcik, NIST OWM, 2011);
- Grocery Unit Pricing in Australia (Mr. Ian Jarratt, Queensland Consumers Association, 2011);
- Grocery Unit Pricing in Canada (Mr. Ian Jarratt, Queensland Consumers Association, 2011);
- The U.S. Hydrogen Measuring System: The Turning Point? (Ms. Kristin Macey, California Division of Measurement Standards, 2011);
- Corrosion in Ultra Low Sulfur Diesel Underground Storage Systems (Mr. Prentiss Searles and Ms. Lorri Gainawi, American Petroleum Institute, 2010);
- Risk-Based Inspection Schemes (Mr. Henry Oppermann, Weights and Measures Consulting, LLC, 2010);
- Diesel Exhaust Fluid (DEF) (Mr. Gordon Johnson, Gilbarco, Inc., and Mr. Randy Moses, Wayne, 2009);
- Fuel Volatility and Ethanol Blending (Mr. Jim McGetrick, BP Products, 2009);
- Investigative Techniques (Mr. Michael Cleary, Retired, 2009)

This publication is available free of charge from: https://doi.org/10.6028/NIST.SP.1253

During open hearings at the 2016 Interim Meeting, the Committee heard a suggestion from Ms. Kristin Macey (California) for a training session on transportation network systems. Mr. Doug Musick (Kansas) commented that this type of technology is showing up in applications other than just passenger transportation and suggested that training in GPS-based measuring systems in general would be beneficial. He noted that his jurisdiction is encountering a large number of GPS-based measuring systems being used in assessing charges for the sale and application of crop fertilizers and other treatments and he noted that the monetary impact is significant.

The Committee also heard comments from Mr. Jim Pettinato (FMC and Chairman of the NTEP Software Sector) who noted that training on issues related to inspection of software-based systems may be beneficial to weights and measures jurisdictions. He noted that, with the current progress of proposals through the NCWM process, the Sector is wrapping up its initial work and suggested that the Sector and its members might be able to assist in training on legal metrology issues relative to software-based weighing and measuring systems. Ms. Julie Quinn (Minnesota) commented that this assistance might be particularly helpful in assisting weights and measures jurisdictions in understanding and educating inspectors and service personnel on audit trails used in these devices, and she noted that audit trail training is the most frequently requested training topic in her jurisdiction.

The Committee appreciates the input and ideas that it has received regarding suggested training topics. Based on the comments received during its open hearings, comments from the fall 2015 regional association meetings, past suggestions, and discussions during its Interim Meeting work sessions, the Committee proposes that the BOD consider offering technical presentations on the following topics:

- Verifying Compliance of Software-Controlled Weighing and Measuring Systems
- This might include the verification of software versions, security, and other metrologically significant issues
- Understanding Transportation Network Systems
- GPS-Based Measuring Systems Used in Applications Other Than Passenger Transport
- Vehicle-Tank Metering Systems “Flush Systems”
- Credit/Debit Card Skimmers

The Committee also discussed the audience that is typically present at NCWM Annual and Interim Meetings, noting that inspectors and service personnel are not always able to participate in these meetings. The Committee believes it would be beneficial not only to offer training on key issues such as those listed above at the NCWM meetings, but to have the training made available at regional and state weights and measures association meetings where more inspectors and service personnel would be likely to attend. Some aspects of the training might need to be tailored more toward field inspection that weights and measures administration, but much of the content should be the same. The Committee would like to collaborate with regional weights and measures associations to suggest that similar training be provided at the regional level.

At the 2016 NCWM Annual Meeting, the Committee suggested that technical training on safety programs be included at Regional and National Meetings, including an update provided by Julie Quinn at the 2016 Annual Meeting. The Committee received no additional suggestions or comments regarding proposed training topics.

At the Interim Meeting 2019 the following suggestions from the floor for additional topics were received:

- Investigative reporting
- D.E.F. Testing requirements, special considerations (handling, safety, equipment)
- Differentiation between weight classifier and normal rounding scales
- Organizing/publishing existing training materials

This publication is available free of charge from: https://doi.org/10.6028/NIST.SP.1253

NCWM 2019 Annual Conference:

- Mr. Tim Chesser (Arizona) suggested that a review of the NTEP organization, processes and certificate system would be a beneficial topic for training in the future.
- Mr. Steve Harrington (Oregon) offered diving into innovations / new areas in metrology (perhaps an industry presentation on a new technology). Steve also suggested that we explore advances in modern distributed weighing/measuring systems, e.g. future point-of-sale systems.
- Mr. Mahesh Albuquerque (Colorado) suggested the topic of emerging fuels, e.g. EV refueling, hydrogen. Ken Ramsburg (Maryland) added LNG/CNG as a possibility. Ken also added the possible topic of the new SI unit definitions and possible impact on W&M organizations.
- Mr. Brett Gurney (Utah) indicated that a possible topic could be a 'case study' of a successfully implemented W&M program (state, county or city) as an example.

Regional Association Comments:
At the WWMA 2018 Annual Meeting the PDC heard the following comments during the open hearings:

- Mr. John Young (Yolo County, California) recommended training related to the use of cellular phones used in commercial transactions as indicating devices, e.g. Amazon Go, EV charging, and Uber, etc.
- Mr. Kipp Blauer (Nevada) suggested training regarding new skimmer technology and communication with law enforcement agencies.
- Mr. Louis Straub (Fairbanks Scales) would like the PDC to consider that often the regional and national committee work sessions are held in conflict with the training seminars. The regional and national committee members and stakeholders are not able to attend the training seminars that are being offered. The field trip to the Magellan Pipeline at the NCWM Annual Meeting in Tulsa, OK. was well attended and these types of field trips might be a better alternative to the training seminars.
- Mr. Dick Suiter (Richard Suiter Consulting) suggested training related to the rental of electronic scooters using cell phones.

At the NEWMA 2018 Interim Meeting, no specific recommendations for future training topics for the NCWM Annual Meetings were made. There were many positive comments regarding the field trip that took place at the Tulsa OK NCWM Annual meeting and an openness to consider doing something similar going forward. The Committee supports alternative technical sessions such as field trips where appropriate.

At the SWMA 2018 Annual Meeting, Mr. Don Onwiler (NCWM Executive Director) commented that we may want to receive from the group not only topics for conference training, but industry type tours like the one of the Magellan Terminal at the NCWM Annual Meeting in Tulsa, Oklahoma. The Chairman received no other comments on this item.

At the CWMA 2018 Interim Meeting, regulators requested that technical training be given on Livestock Scales and Monorail Scales. They would also like to see a 1-2 hour training course be given for (e) verification divisions and (d) divisions. Training was requested for digital density meters. There will be technical training on Retail Motor Fuel Meters given in Canton, Ohio May 6 - 9th, 2019 during the CWMA Annual Meeting running concurrently with the conference. Mr. Chris Guay (Procter & Gamble) will also be providing some training on Packaging and Labeling at the CWMA Meeting.

This publication is available free of charge from: https://doi.org/10.6028/NIST.SP.1253

PMT – PROGRAM MANAGEMENT

PMT-1 I Safety Awareness

One of the goals of the PDC is to educate jurisdictions on safety issues and to provide resources to help them implement effective safety and health management programs. The Committee intends to use the safety page on the NCWM website (**www.ncwm.com/resource/safety**) as a place for states to share information and resources to help them address each of the major steps in creating and maintaining an effective safety program.

In July 2017, the Board of Directors created the Safety Task Group to create a safety tool kit to help weights and measures organizations create or improve their own safety programs. The toolkit is complete and is posted on the NCWM website at: **www.ncwm.com/resource/safety.**

At the 2018 NWM Annual Meeting, the NCWM BOD decided to make the task group a permanent sub-committee associated with the PDC. The newly formed Safety Awareness Subcommittee (SAS) will assume responsibility for:

- Maintaining and updating the safety toolkit
- Writing and deploying the NCWM annual safety survey, as well as reporting on the results each year
- Finding resources and/or developing weights-and-measures-focused materials relating to the top hazards identified through the safety survey or through developing the toolkit
- Building a safety culture and developing safety leadership within the NCWM through participation on SAS

The SAS is currently working to improve the annual safety survey by:

- Including questions about near-miss incidents and about incidents resulting in lost or restricted time over multiple years
- Contacting counties and associate members to increase participation
- Writing an instruction guide to help participants gather the information they need before completing the survey

The results of the 2018 survey were consistent with 2016 and 2017 results. Seven injuries were reported which resulted in days-away or lost time. All incidents occurred in the field. Five of them were related to lifting/bending/twisting. The other two were related to slips/trips and falls. Six of the resulting injuries were soft tissue injuries (sprains, strains, torn joint ligaments, etc.) The remaining injury was a back/neck injury.

Although the survey does not currently ask about near-miss incidents, several jurisdictions have shared information about near-miss incidents which resulted in no days-away or lost time. When the results of all three annual surveys are compiled, the top four causes of near-misses are the same as the top four causes of DART incidents.

The following information was provided at the 2019 Interim Meeting:

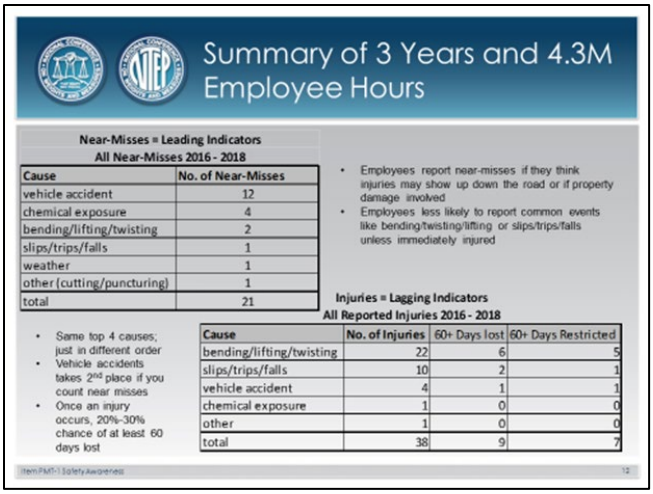

The SAS will focus some of their efforts next year in developing weights and measures materials related to:

- Bending/Lifting/Twisting
- Vehicle Accidents
- Slips/Trips/Falls
- Chemical Exposure

NCWM members are encouraged to review the complete presentation on the 2018 safety survey on the NCWM safety page.

The Committee expresses appreciation to the members of the Safety Awareness Subcommittee for their willingness to volunteer for this important work.

Safety Awareness SubCommittee		
Office	**Name**	**Affiliation**
Chair	Julie Quinn	Minnesota
Public Sector Member	Jason Flint	New Jersey
Public Sector Member	Georgia Harris/Doug Olson	NIST, Office of Weights and Measures
Public Sector Member	Elizabeth Koncki	Maryland
Public Sector Member	Matt Maiten	Santa Barbara County, California
Public Sector Member	Brenda Sharkey	South Dakota
Public Sector Member	Mike Sikula	New York
Private Sector Member	Tisha Arriaga/Jeff Griffith	Marathon Petroleum, LLC
Private Sector Member	Bill Callaway	Crompco
Private Sector Member	Remy Cano	Northwest Tank and Environmental Services, Inc.
Private Sector Member	Brad Fryburger	Rinstrum, Inc.
Private Sector Member	Robert LaGasse	Mulch and Soil Council
Private Sector Member	John Lawn	Rinstrum, Inc.
Private Sector Member	Richard Shipman	Rice Lake Weighing Systems, Inc.
Private Sector Member	H. Sprague Ackley	Honeywell Safety and Productivity Solutions

Currently the NCWM safety webpage houses the list of regional safety liaisons and an archive of past safety articles.

Regional Safety Liaisons:
Central Weights and Measures Association (CWMA):
Ms. Julie Quinn, Minnesota Weights and Measures Division

This publication is available free of charge from: https://doi.org/10.6028/NIST.SP.1253

This publication is available free of charge from: https://doi.org/10.6028/NIST.SP.1253

Northeastern Weights and Measures Association (NEWMA):
Mr. Michael Sikula, New York Bureau of Weights and Measures

Southern Weights and Measures Association (SWMA):
Ms. Elizabeth Koncki, Maryland Department of Agriculture

Western Weights and Measures Association (WWMA):
Mr. Brett Gurney, Utah Department of Agriculture and Food

Each region is responsible for providing a safety article for the NCWM newsletter according to the following schedule:

Safety Article Schedule		
Issue 3 (September 2019)	CWMA	August 15, 2019
Issue 1 (February 2020	NEWMA	January 15, 2020
Issue 2 (May 2020)	SWMA	April 15, 2020
Issue 3 (September 2020)	WWMA	August 15, 2020

Thanks to the following individuals for their contributions since the 2017 NCWM Annual meeting:

- *Preparing Employees for an Active Shooter Event* - Julie Quinn, Michigan
- *Safety is Up to Me!* - Brett Gurney, Utah
- *Is it Safe to Run Gasoline Through a Large Volume Prover?* - Mike Sikula, New York
- *Check it out! The Happy-list State* - Elizabeth Koncki, Maryland

At the NCWM 2019 Annual Conference, Mr. Steven Harrington (Oregon) suggested that we could publish 'best ergonomic practices' in daily weights and measures routines as these tasks undergo hazard analysis, and communicate these recommendations to avoid repetitive motion injury, etc. during daily tasks as they are developed.

Regional Association Comments:
At the 2018 WWMA Annual Meeting, the WWMA PDC heard no comments during the open hearings. The WWMA PDC continues to support the importance of safety and the work being done by NCWM.

At the NEWMA 2018 Interim Meeting, Mr. Walt Remmert (Pennsylvania) volunteered to take a lead for NEWMA on training topics including Safety. He stated that Julie Quinn might be utilized to assist with safety training. Pennsylvania paid for all state Weights and Measures employees to attend the 10-hour OSHA class.

Mr. Michael Sikula (NEWMA Regional Safety Liaison) gave a detailed report on the concerns and issues related to using 100-gallon provers to test gasoline meters. New York will be developing a PowerPoint presentation to assist in the training of inspectors in New York on the hazards of testing these meters used for gasoline. The Committee and NEWMA would like to thank Mr. Sikula for his continued contributions as the Regional Safety Liaison. The Committee would like to thank Julie Quinn and the Safety Committee for their ongoing contributions to the Safety section of the PDC. The Committee supports ongoing training and education on Safety Issues.

At the SWMA 2018 Annual Meeting, the Chairman received no comments on this item.

At the CWMA 2018 Interim Meeting, Ms. Julie Quinn (Minnesota) gave an overview of the game (Luck of the Draw) which she will present to the members on Wednesday Octobter 17, 2018, reviewed the safety survey results and stated that property damage will be added to the survey.

Mr. Gene Robertson, Mississippi | Committee Chair
Mr. Marc Paquette, Vermont | Member
Mr. David Aguayo, San Luis Obispo County, California | Member
Ms. Brenda Sharkey, South Dakota | Member
Mr. Scott Ferguson, Michigan | Member
Mr. James Pettinato, FMC Technologies Measurement Solutions, Inc. | AMC Representative
Ms. Julie Quinn, Minnesota | Safety Liaison
Ms. Tina Butcher | NIST Liaison
Mr. Ross Andersen | Certification Coordinator
Mr. Jerry Buendel | Certification Coordinator

Professional Development Committee

This publication is available free of charge from: https://doi.org/10.6028/NIST.SP.1253

This publication is available free of charge from: https://doi.org/10.6028/NIST.SP.1253

THIS PAGE INTENTIONALLY LEFT BLANK

This publication is available free of charge from: https://doi.org/10.6028/NIST.SP.1253

Report of the

National Type Evaluation Program (NTEP) Committee

Mr. James Cassidy, Chairman
Massachusetts

INTRODUCTION

This is the report of the National Type Evaluation Program Committee (NTEP) (hereinafter referred to as the "Committee") for the 104th Annual Meeting of the National Conference on Weights and Measures (NCWM). This report is based on the Interim Report offered in the NCWM Publication 16, testimony heard at public hearings, comments received from the regional weights and measures associations and other parties, the addendum sheets issued at the Annual Meeting, and actions taken by the membership at the voting session of the Annual Meeting. The Informational items presented below were adopted as presented when the report of the NCWM Board of Directors (hereinafter referred to as the "Board") was approved.

Table A identifies the agenda and appendix items. Agenda items are identified in the Report by Reference Key Number, Item Title, and Page Number. Item numbers are those assigned in the Interim Meeting agenda. A Voting item is indicated with a "**V**" after the item number. An item marked with an "**I**" after the reference key number is an Informational item. An item marked with a "**D**" after the reference key number is a Developing item. The Developing designation indicates an item has merit; however, the item was returned to the submitter for further development before any action can be taken at the national level. An agenda "Item Under Consideration" is a statement of proposal and not necessarily a recommendation of the Committee. Suggested revisions are shown in **bold** face print by **striking out** information to be deleted and **underlining** information to be added. Table B lists the results of any Voting Items.

Note: It is the policy to use metric units of measurement in publications; however, recommendations received by NCWM technical committees and regional weights and measures associations have been printed in this publication as submitted. Therefore, the report may contain references to inch-pound units.

This publication is available free of charge from: https://doi.org/10.6028/NIST.SP.1253

Subject Series List

Table A
Table of Contents

This publication is available free of charge from: https://doi.org/10.6028/NIST.SP.1253

Table B
Glossary of Acronyms and Terms

Acronym	Term	Acronym	Term
CC	Certificate of Conformance	NCWM	National Conference on Weights and Measures
CIML	International Committee of Legal Metrology	NIST	National Institute of Standards and Technology
DoMC	Declaration of Mutual Confidence	NTEP	National Type Evaluation Program
IV	Initial Verification	OIML	International Organization of Legal Metrology
MAA	Mutual Acceptance Arrangement	OIML-CS	International Organization of Legal Metrology – Certificate System
MC	Measurement Canada	OWM	Office of Weights and Measures
MDMD	Multiple Dimension Measuring Devices	R	Recommendation
MRA	Mutual Recognition Arrangement	VCAP	Verification Conformity Assessment Program

Details of All Items
(In order by Reference Key)

INT – INTERNATIONAL

INT-1 I Mutual Recognition Arrangement (MRA)

Background/Discussion:
The MRA between Measurement Canada (MC) and NTEP labs originated April 1, 1994. Since that time, the original MRA has expanded, and a second MRA covering measuring devices was developed. On Tuesday July 26th, 2016, NCWM Chairman Mr. Jerry Buendel and Measurement Canada President Mr. Alan Johnston signed a renewal MRA that provides for continued cooperation between the two organizations and continuation of the beneficial partnership. The new MRA was to be effective for 5 years.

The scope of the current MRA includes:

- gasoline and diesel dispensers;
- high-speed dispensers;
- gasoline and diesel meters intended to be used in fuel dispensers and truck refuelers;
- electronic computing and non-computing bench, counter, floor, and platform scales with a capacity up to 1000 kg (2000 lb);
- weighing/load receiving elements with a capacity of up to 1000 kg (2000 lb);
- electronic weight indicating elements (except those that are software based, i.e., programmed by downloading parameters); and
- mechanical scales up to 10 000 kg (20 000 lb).

MC, NTEP, and all our mutual stakeholders agree that the MRA is a benefit for the North American weights and measures industry. The NTEP Committee appreciates the efforts and cooperation of Measurement Canada and is working with MC to continue the cooperative arrangement.

The NTEP Weighing and Measuring Laboratories held their annual meeting and training in Gatineau/Ottawa Canada April 3-5, 2018. During that time all representatives attended a session at the at the Measurement Canada facilities. NCWM/NTEP wants to state their appreciation for the hospitality of the Measurement Canada staff.

INT-2 I OIML-Certification System (CS)

Background/Discussion:
In January 2018, the International Organization of Legal Metrology (OIML) MAA was officially replaced with the OIML-Certification System (CS). Information regarding the OIML-CS can be found at **www.oiml.org/en/oiml-cs/general-info**. NCWM signed the OIML MAA Declaration of Mutual Confidence (DoMC) for Recommendation (R) 60 Load Cells as a "Utilizing Participant" in 2006, and NCWM signed the OIML-CS Utilizer Declaration in January 2018. A "Utilizer" is a participant which does not issue any OIML Certificates of Conformance (CC) nor OIML Test Reports but does utilize the reports issued by OIML-CS Issuing Authorities.

Because of difficulties encountered by the International Bureau of Legal Metrology (BIML) in adequately obtaining and summarizing peer review and/or accreditation data from the MAA test laboratories, it was proposed that a more robust OIML Certification System (OIML-CS) be developed that includes a Management Committee to develop policy (subject to approval by the International Committee on Legal Metrology, or CIML) and oversee operations. A preliminary Framework Document for developing the OIML-CS was prepared and was presented to the CIML and approved at the 2016 CIML Meeting (in Strasbourg, France). On this basis, an OIML-CS Preliminary Management Committee (PrMC) was formed, which continued the work of developing the additional OIML-CS documents. Dr. Charles Ehrlich (NIST OWM) represented the U.S. on the PrMC at meetings in Berlin, Germany, held February 2017, and in Shanghai, China, held June 2017. Mr. Darrell Flocken (NCWM/NTEP) accompanied Dr. Ehrlich to the Shanghai meeting, which also included a Seminar on the OIML-CS and a final meeting of the MAA Committee on Participation Review (CPR). The CIML approved the OIML-CS Framework Document (OIML B 18) at its annual meeting in Cartagena, Colombia, October 2017, and the OIML-CS went into effect on January 2018.

Dr. Ehrlich serves on the Management Committee of the OIML-CS, and Mr. Flocken will serve on the Review Committee. The US (NTEP) supported the OIML-CS process and has agreed to continue accepting OIML-CS R 60 test data for load cells, with the provision that any use of manufacturer test data was clearly identified on the test report section of the certificate because NTEP cannot use manufacturer test data towards issuance of an NTEP certificate. The OIML-CS criteria align with the NTEP Committee's recommendations and the instructions provided by the NCWM Board of Directors.

Dr. Ehrlich requested, on multiple occasions, that NCWM review its policy regarding participation in the OIML MAA (and now the OIML-CS) for R76 (Non-Automatic Weighing Instruments). The NCWM Board recapped the decision process to participate in the utilization of R60 test data. Existing policy from 2006 states that NCWM will not participate in R76 until NCWM can do so as an "Issuing Participant" (now referred to under the OIML-CS as an "Issuing Authority"). The Board has revisited the 2006 discussions leading to that decision, including considerations for NTEP labs' workload; potential lost expertise; concerns with quality of evaluations at some foreign labs; etc. Dr. Ehrlich wanted NCWM to reconsider and, if there was no possibility in sight that the NCWM could become an Issuing Authority, then it should consider becoming a Utilizing Participant for OIML R76. Some U.S. manufacturers support NCWM policy, but others would like to have one-stop shopping. The OIML-CS also includes R49 (water meters), and R117 (RMFD) will be added next year (under what is called "Scheme A," which is the introductory level of the OIML-CS where "self-declaration" is used as the basis for demonstrating compliance with the OIML-CS). OIML R60 and OIML R76 are already under "Scheme A," where either accreditation or peer review is required. Since there are no new developments to affect this decision, the Board agreed to maintain existing policy at this time.

This publication is available free of charge from: https://doi.org/10.6028/NIST.SP.1253

During the period of January 2011 to October 2018 time frame, 91 NTEP Certificates of Conformance were issued for load cells under the former MAA (now the OIML Certificate System). The NTEP Administrator has reviewed all test data and drafted the NTEP certificates.

Dr. Ehrlich is representing the U.S. interests in this work and will update the Board at the NCWM Interim Meeting in January 2019.

This publication is available free of charge from: https://doi.org/10.6028/NIST.SP.1253

ACT – ACTIVITY REPORTS

ACT-1 I NTEP Participating Laboratories and Evaluations Reports

Background/Discussion:
The NTEP weighing and measuring laboratories held a joint meeting April 3-5, 2018, in Ottawa, Canada.

The NTEP weighing laboratories also met in August 2018, prior to the NTEP Weighing Sector meeting (Louisville, Kentucky), and the NTEP measuring laboratories met in September 2018, prior to the NTEP Measuring Sector meeting (in Baltimore, MD) to discuss current issues.

NTEP continues to routinely survey customers pertaining to NTEP administration and laboratories customer service. The survey is released to active CC holders. The Board routinely reviews the results of the survey to form a continuous improvement plan for NTEP. With any survey, the challenge is to develop a document that is concise enough that customers will respond, while also providing a meaningful set of data. To date, the Board is finding general approval of NTEP services.

During the 2018 Annual Meeting the Committee reviewed NTEP statistics through June 2018. The review of statistics shows that incoming applications are relatively comparable to normal and there exist no significant laboratory backlog issues. See Appendix A for NTEP statistics.

The 2019 meeting of the NTEP Participating Laboratories is scheduled for March 26-28, 2019, in Tulsa, Oklahoma.

ACT-2 I NTEP Sector Reports

Background/Discussion:
All NTEP Sector reports were available to members at the time NCWM Publication 15 was published. The NTEP Committee is committed to ensuring that electronic versions of sector reports are available with NCWM Publication 15. Please note that the sector reports will only be available in the electronic version of NCWM Publication 15 at **www.ncwm.com/annual-archive** they will not be available in the printed versions of NCWM Publication 15.

The NTEP Committee reviewed and approved all 2018 NTEP Sector and Work Group reports and recommendations on January 15, 2019, at the NCWM Interim Meeting.

NTEP Belt-Conveyor Scale Sector:
The NTEP Belt-Conveyor Scale Sector met February 23, 2016, in Pittsburgh, PA. The Sector did not have enough NIST Handbook 44 and NCWM Publication 14 agenda items to justify a meeting in 2017 or 2018.

The next meeting of the NTEP Belt-Conveyor Scale Sector is being considered for late 2019 but has not been scheduled at this time. For questions on the status of Sector work or to propose items for a future meeting, please contact the Sector Technical Advisor:

Technical Advisor
Mr. John Barton
NIST, OWM
100 Bureau Drive, MS 2600
Gaithersburg, MD 20899

Phone: (301) 975-4002
Fax: (301) 975-8091
E-mail: **john.barton@nist.gov**

NTEP Grain Analyzer Sector:
The NTEP Grain Analyzer Sector met August 15-16, 2018, in Kansas City, Missouri. A draft of the final summary was provided to the Committee prior to the 2019 NCWM Interim Meeting for review and approval (See Appendix B).

The next meeting of the NTEP Grain Analyzer Sector is scheduled for August 13, 2019, in Kansas City, Missouri. For questions on the status of Sector work or to propose items for a future meeting, please contact the Sector Technical Advisor:

Technical Advisor
Ms. G. Diane Lee
NIST, OWM
100 Bureau Drive, MS 2600
Gaithersburg, MD 20899

Phone: (301) 975-4005
Fax: (301) 975-8091
E-mail: **diane.lee@nist.gov**

NTEP Measuring Sector:
The NTEP Measuring Sector met September 25-26, 2018, in Baltimore, Maryland. A draft of the final summary was provided to the Committee prior to the 2019 NCWM Interim Meeting for review and approval (See Appendix C).

The next meeting of the NTEP Measuring Sector Meeting is scheduled for September 24-25, 2019, in Denver, Colorado. For questions on the status of Sector work or to propose items for a future meeting, please contact the Sector Technical Advisor:

Technical Advisor
Ms. Tina Butcher
NIST, OWM
100 Bureau Drive, MS 2600
Gaithersburg, MD 20899

Phone: (301) 975-2196
Fax: (301) 975-8091
E-mail: **tina.butcher@nist.gov**

NTEP Software Sector:
The NTEP Software Sector met August 22-23, 2018, in Louisville, Kentucky. It was a joint meeting with the NTEP Weighing Sector. A final draft of the meeting summary was provided to the Committee prior to the 2019 NCWM Interim Meeting for review and approval (See Appendix D).

The next meeting of the NTEP Software Sector is scheduled for September 25-26, 2019, in Denver, Colorado. The meeting will be a joint meeting of the NTEP Measuring Sector and Software Sector. For questions on the status of Sector work or to propose items for a future meeting, please contact the Sector Chair and/or the NTEP Specialist:

Chair
Mr. James Pettinato
FMC Technologies Measurement Solutions, Inc.
1602 Wagner Avenue
Erie, PA 16510
Phone: (814) 898-5250
Fax: (814) 899-3414
Email: **jim.pettinato@fmcti.com**

NTEP Specialist
Mr. Darrell Flocken
NCWM
1135 M Street, Suite 110
Lincoln, NE 68508
Phone: (614) 620-6134
Email: **darrell.flocken@ncwm.com**

This publication is available free of charge from: https://doi.org/10.6028/NIST.SP.1253

This publication is available free of charge from: https://doi.org/10.6028/NIST.SP.1253

NTEP Weighing Sector:
The NTEP Weighing Sector was held August 21-23, 2018, in Louisville, Kentucky. This was a joint meeting with the NTEP Software Sector. A final draft of the meeting summary was provided to the Committee prior to the 2019 NCWM Interim Meeting for review and approval (See Appendix E).

The next NTEP Weighing Sector meeting is scheduled for August 20-21, 2019, in Denver, Colorado. For questions on the status of Sector work or to propose items for a future meeting, please contact the Sector Technical Advisor:

Technical Advisor
Mr. Rick Harshman
NIST, OWM
100 Bureau Drive, MS 2600
Gaithersburg, MD 20899

Phone: (301) 975-8107
Fax: (301) 975-8091
E-mail: **richard.harshman@nist.gov**

NTEP Multiple Dimension Measuring Devices (MDMD) Work Group:
The NTEP MDMD Work Group met May 8-9, 2018, in Columbus, Ohio. A final draft of the meeting summaries was provided to the Committee prior to the 2019 NCWM Interim Meeting for review and approval. (See Appendix F)

The next NTEP MDMD Work Group meeting is scheduled for May 7-8, 2019, in Columbus, Ohio. For questions on the status of work group or to propose items for a future meeting, please contact Work Group Chair Mr. Chris Senneff (Rice Lake) or NTEP Specialist Mr. Darrell Flocken.

Chair
Mr. Chris Senneff
Rice Lake Weighing Systems
230 W. Coleman Street
Rice Lake, WI 54868
Phone: (715) 434-5175
Email: **csenneff@ricelake.com**

NTEP Specialist
Mr. Darrell Flocken
NCWM
1135 M Street, Suite 110
Lincoln, NE 68508
Phone: (614) 620-6134
Email: **darrell.flocken@ncwm.com**

CAP – CONFORMITY ASSESSMENT PROGRAM

CAP-1 I Conformity Assessment Program

Background/Discussion:
The Conformity Assessment Program was established to ensure devices produced after the device has been type evaluated and certified by NTEP continue to meet the same requirements. This program has three major elements: 1) Certificate Review (administrative); 2) Initial Verification (inspection and performance testing); and 3) Verified Conformity Assessment (influence factors). This item is included on the Committee's agenda to provide an update on these elements.

Certificate Review:
Certificates are constantly under review by NTEP staff and laboratories. Many active certificates are amended annually because of manufacturer submission for evaluation or issues reported by the states pertaining to information on the certificate. When the devices are re-evaluated and certificates are amended, all information is reviewed and necessary steps are taken to assure compliance and that accurate, thorough information is reported on the certificate.

In an effort to keep certificate information up to date, the Committee continues to offer an opportunity for active certificate holders to update contact information that is contained in the "Submitted By" box on certificates. This is offered during the payment period of their annual maintenance fee. Many CC holders have taken advantage of the opportunity for hundreds of NTEP certificates.

This publication is available free of charge from: https://doi.org/10.6028/NIST.SP.1253

Initial Verification (IV):
The IV initiative is ongoing. Field enforcement officials perform an initial inspection and test on new installations on a routine basis. The Committee recognized that the states do not want IV reporting to be cumbersome.

An IV report form was developed several years ago. The Committee desired a simple form, perhaps web-based for use by state and local regulators. The form was approved by the Committee and distributed to the states. A completed form can be submitted via mail, e-mail, fax, or online. The form is available to regulatory officials who are members of NCWM at **www.ncwm.com/ntep-about**.

NTEP has acknowledged that the state, county, and city regulators have not bought into the IV report form. Industry representatives stated that IV is very important to ensure conformity assessment and the NCWM should push harder for reporting of non-compliance issues found during IV.

NTEP is open to suggestions on how to improve the reporting of non-compliant devices found during initial verification.

VCAP:
NCWM has been concerned about production meeting type and protecting the integrity of the NTEP CC since the inception of NTEP. The NCWM Board of Directors has consistently reconfirmed its belief that conformity assessment is vital to NTEP's continued success.

Load cells traceable to NTEP certificates were selected for the initial assessment effort under VCAP. NCWM elected to require a systems-audit checklist that is to be completed by an outside auditor and submitted to NCWM per Section 221.3.3.3.5 of the VCAP requirements. A VCAP Systems Audit Checklist for Manufacturers and a VCAP Systems Audit Checklist for Private Label Certificate Holders have been developed and are available on the NCWM website at **www.ncwm.com/vcap-faqs.** Additionally, the Committee developed a new NCWM Publication 14, administrative policy to distinguish between the requirements for "parent" NTEP certificate holders (21.3.3.2) and "private label" certificate holders. The requirements in 21.3.3.7 track the private label checklist requirements: traceability to parent NTEP CC; traceability of the private label cell to a VCAP audit; purchase and sales records; plan to report non-conforming product and non-conforming product in stock; plan to conduct internal audits to verify non-compliance action; and internal audit records.

Updated Statistics: The Committee was given updated VCAP statistics and information during the 2018 Annual Meeting. The following summarizes the results of VCAP activities for July 1, 2017 to June 1, 2018.

Load Cells:

- 41 new or amended CC's were issued since July 1, 2017. Of these 41, 6 CC were issued to 5 new manufacturers. Manufacturers have until November 2018 to become VCAP compliant.
- No CCs were made inactive since July 1, 2017 because of VCAP noncompliance.

W/LRE ≥ 2000 lb w/non NTEP load cells:

- 17 new or amended CC's, within this VCAP device category, were issued since July 1, 2017. Of these 17, 2 CCs were issued to a new manufacturer. The manufacturer has until February 2019 to become VCAP-compliant.
- No CCs were made inactive since July 1, 2017 because of VCAP noncompliance.

Indicating Elements:

- 36 new or amended CC's were issued since July 1, 2017. Of these 36, 5 CC's were issued to 4 new manufacturers. The manufacturers have until March and August 2019 to become VCAP-compliant.
- No CC's were made inactive since July 1, 2017 because of VCAP noncompliance.

This publication is available free of charge from: https://doi.org/10.6028/NIST.SP.1253

Complete Scales: This device category has a compliance deadline of the end of June 2018 for manufacturers and the end of December 2018 for private label CC holders.

- 6 new CC holding companies have been added to VCAP for this category of device types since the original 56 reported on last year, bringing the total number of manufacturers requiring VCAP audits to 62.
  - 58 are manufacturers
  - 4 are private labelers.
- 94 new or amended CC's were issued since July 1, 2017.

For the addition of this device type, and future device types, it is not possible to report on the exact number of manufacturers which have included this device type into their VCAP program. This is because of the most recent VCAP Policy change not requiring manufactures with current VCAP compliance status to undergo an audit for the new device type. Compliance will be determined at their external audit. NTEP can report that 2 new manufacturers have received their first CC and have until January 2019 to become VCAP compliant.

Miscellaneous VCAP Information:

1. To date, the NTEP Specialist has audited 16 companies totaling 19 locations.
2. The current audit backlog in scheduled audits consists of 3 new companies and 1 current customer.
3. The NTEP Specialist will begin scheduling re-assessment audits (the 3-year schedule) in the second half of 2018.

VCAP Audits: The Committee had discussions about the required number of audits for facilities that manufacture multiple device types. For example, if a company had successful audits for two device types, they might submit a request for a delay from audit requirements for remaining device types, stating that they are all subjected to the same processes and will be audited in the next cycle. The Committee agreed to the request in principal and directed the NTEP Administrator to develop NCWM policy language. As a result, the following policy was adopted by the Board in 2013.

Adding Device Categories to VCAP:

Policy:

1. When a new device category is added to the VCAP requirement, NTEP will recognize the current VCAP audit certification in effect, submitted by a certificate holder, for the same certificate holder and same production facility(s), to cover the new device category, continue the manufacturing process for devices covered by NTEP certificates in the newly added device category, until the due date of the next VCAP audit.

   Example: If a company had successful audits for two device types, they might submit a request for exemption from audit requirements for remaining device types, stating that they are all subjected to the same quality management system and will be included in the next audit cycle. The next VCAP audit must be done within 3 years of the last audit and address all applicable device types produced within that facility.

Seven weighing device categories subject to influence factors, as defined in NIST Handbook 44, were identified and are subject to VCAP audits. Certificate holders for these device types are required to have an on-site audit of the manufacturer's quality system and on-site random and/or review of a production device by an outside auditor to verify compliance with VCAP. The NTEP Committee and NCWM Board agreed not to include weighing/load receiving elements using NTEP load cells in the list of device categories subject to VCAP. The NCWM Board notified certificate holders that they have no intention of amending the table of devices subject to influence factor testing found in the Weighing Devices Section of NCWM Publication 14.

This publication is available free of charge from: https://doi.org/10.6028/NIST.SP.1253

Certificate holders are encouraged to research the VCAP requirements on the NCWM website under the NTEP Conformity Assessment section. Certificate holders are encouraged to review the VCAP requirements applicable to their devices and report concerns to the NTEP Committee.

The following disclaimer has been advertised and communicated by NCWM: "NCWM is working to identify all active certificates subject to VCAP compliance. As a courtesy, affected certificate holders are being notified of VCAP requirements and the established time line. Please note that the Board does not consider it to be NCWM's responsibility to notify all certificate holders about affected certificates. Certificate holders are responsible for reviewing their active NTEP certificates and compliance with VCAP."

The Committee has received letters, questions, and many other inquiries pertaining to VCAP. The Committee has worked diligently to answer the questions submitted in a very timely manner. The Committee knows additional questions will be posed as VCAP progresses. Certificate holders and other interested parties are encouraged to submit written questions to the NTEP Committee. The Committee is pleased to report that it has been successful in answering all the questions to date. Clerical changes and additions have been made to affected VCAP documents as deemed necessary.

CAP-2 I Timelines for Remaining Device Categories Subject to VCAP

Source:
NTEP Committee

Item Under Consideration:
NCWM decided to include the remaining device categories subject to VCAP as soon as practicable. In 2016, the Committee worked to develop a timeline to include the remaining categories. NTEP has developed the following timelines to phase in the remaining device categories. The timelines identify the inclusion of the remaining device types into the NTEP Verified Conformity Assessment Program. Each timeline includes both manufacturers and private label holders of Certificates of Conformance for the device type. The Committee is moving forward with the following timelines.

Background/Discussion:
The Committee heard comments proposing that the remaining device categories be phased in over a several-year period. The Committee appreciates the input from the stakeholders.

When VCAP requirements are applied, the certificate holder is required to have an on-site audit of the manufacturer's quality system and on-site random and/or review of a production device by an outside auditor to verify compliance with VCAP. Certificate holders are encouraged to research the VCAP requirements on the NCWM website under the NTEP, Conformity Assessment section; review the VCAP requirements applicable to their devices; and report concerns to the NTEP Committee.

Automatic Weighing Systems:

<table>
<tr><th colspan="6">NCWM/NTEP VCAP Compliance Timeline
Automatic Weighing Systems</th></tr>
<tr><th>July 2017-
Sept 2017</th><th>July 2017-
Nov 2018</th><th>July 2017-
May 2019</th><th>July 2017-
Jun 2019</th><th>Dec 2018</th><th>Jun 2019</th></tr>
<tr><td rowspan="2">NTEP notifies active CC holders of VCAP requirements</td><td>Parent CC holders to put VCAP QM system in place</td><td>Private Label CC holders to put VCAP QM system in place</td><td>NTEP evaluates incoming audit reports</td><td rowspan="2">NCWM declares CCs inactive if Parent CC holder fails to comply with VCAP</td><td rowspan="2">NCWM declares CCs inactive if Private Label CC holder fails</td></tr>
<tr><td>CC holder to have audit completed by</td><td>CC holder to have audit completed by</td><td>NTEP contacts CC holders not meeting VCAP</td></tr>
</table>

	authorized auditing company	authorized auditing company	requirements to encourage compliance		to comply with VCAP
	Submit audit report to NCWM/NTEP	Submit audit report to NCWM/NTEP			

Automatic Bulk Weighing Systems:

NCWM/NTEP VCAP Compliance Timeline Automatic Bulk Weighing Systems					
Jan 2018- March 2018	**Jan 2018- May 2019**	**Jan 2018- Nov 2019**	**Jan 2018- Dec 2019**	**Jun 2019**	**Dec 2019**
NTEP notifies active CC holders of VCAP requirements	Parent CC holders to put VCAP QM system in place	Private Label CC holders to put VCAP QM system in place	NTEP evaluates incoming audit reports	NCWM declares CCs inactive if Parent CC holder fails to comply with VCAP	NCWM declares CCs inactive if Private Label CC holder fails to comply with VCAP
	CC holder to have audit completed by authorized auditing company	CC holder to have audit completed by authorized auditing company	NTEP contacts CC holders not meeting VCAP requirements to encourage compliance		
	Submit audit report to NCWM/NTEP	Submit audit report to NCWM/NTEP			

Belt-Conveyor Scales:

NCWM/NTEP VCAP Compliance Timeline Belt-Conveyor Scales					
July 2018- Sept 2018	**July 2018- Nov 2019**	**July 2018- May 2020**	**July 2018- Jun 2020**	**Dec 2019**	**Jun 2020**
NTEP notifies active CC holders of VCAP requirements	Parent CC holders to put VCAP QM system in place	Private Label CC holders to put VCAP QM system in place	NTEP evaluates incoming audit reports	NCWM declares CCs inactive if Parent CC holder fails to comply with VCAP	NCWM declares CCs inactive if Private Label CC holder fails to comply with VCAP
	CC holder to have audit completed by authorized auditing company	CC holder to have audit completed by authorized auditing company	NTEP contacts CC holders not meeting VCAP requirements to encourage compliance		
	Submit audit report to NCWM/NTEP	Submit audit report to NCWM/NTEP			

Background/Discussion:
Two scale companies requested that NTEP consider exempting Automatic Weighing Systems (AWS) and Automatic Bulk Weighing Systems (ABWS) from the VCAP audit requirement if they utilize NTEP certified load cells. The Committee discussed both device categories during their work session. The Committee found that all AWS NTEP certificates were for complete devices per NTEP Technical Policy. Some research also revealed that most ABWS certificates were for the ABWS controller. The hoppers normally used in an ABWS are covered by their own weighing/load-receiving NTEP CC and are several thousand-pounds in capacity. Hence, they are already outside the VCAP requirement since they exceed the 2000 lb capacity or less threshold. The Committee was made aware of three

This publication is available free of charge from: https://doi.org/10.6028/NIST.SP.1253

NTEP certificates for ABWS which have a capacity of 2000 lb or less, but all three were for complete weighing devices. The Committee concluded that certificates for AWS and ABWS devices are for complete scales or indicating elements/controllers and require a VCAP audit.

Additional comments from affected stakeholders are welcomed and appreciated.

ADM – NCWM PUBLICATION 14, ADMINISTRATIVE POLICY

ADM-1 I Amend VCAP Sections 21.1.3.1. and 21.1.3.6.

Source:
Scale Manufacturers Association

Purpose: Clarify NTEP Administrative Policy VCAP requirements list for both original (Section 21.1.3.1.) and private label (Section 21.1.3.6.) certificate holders to show there is a capacity limitation that applies.

Item Under Consideration: Amend NCWM Publication 14, Administrative Policy, Section 21.1.3.1. NTEP VCAP Procedures as follows:

Section 21.1.3.1. Devices that Must Meet this Requirement are Limited to the List Below:

- Load Cell (T.N.8.)
- Indicating Elements (T.N.8.)
- Weighing/Load Receiving Elements **2000 lb capacity and less** with non-NTEP Load Cells (T.N.8.)
- Complete Scales **2000lb capacity and less** (T.N.8.)
- Automatic Weighing Systems **2000 lb capacity and less** (T.7.)
- Belt-Conveyor Scales **2000 lb capacity and less** (T.3)
- Automatic Bulk Weighing Systems **2000 lb capacity and less** (T.7.)

Amend NCWM Publication 14, Administrative Policy, Section 21.1.3.6. NTEP VCAP Procedures for Private Label Certificate Holders as follows:

Section 21.1.3.6 Devices that Must Meet this Requirement are Limited to the List Below:

- Load Cell (T.N.8.)
- Indicating Elements (T.N.8.)
- Weighing/Load Receiving Elements **2000 lb capacity and less** with non-NTEP Load Cells (T.N.8.)
- Complete Scales **2000 lb capacity and le**ss (T.N.8.)
- Automatic Weighing Systems **2000 lb capacity and less** (T.7.)
- Belt-Conveyor Scales **2000 lb capacity and less** (T.3)
- Automatic Bulk Weighing Systems **2000 lb capacity and less** (T.7.)

Justification: The requirements for VCAP influence testing do not clarify that they are for devices of 2000lb or less. This stipulation is generally known, but it needs to be properly documented in the handbook to eliminate any "grey areas" of enforcement for VCAP audits.

This publication is available free of charge from: https://doi.org/10.6028/NIST.SP.1253

This publication is available free of charge from: https://doi.org/10.6028/NIST.SP.1253

Discussion: NTEP views the proposals as clerical in nature. The Scale Manufacturers Association supports this item. The Committee will recommend a vote of the NCWM Board on this item at its July 2019 Meeting.

ADM-2 I Change VCAP Audit Frequency in Sections 3.2.16. and 3.7.10.

Source:
Scale Manufacturers Association
Purpose: Change NTEP Administrative Policy VCAP surveillance requirements for both original (Section 3.2.16.) and private label (Section 3.7.10.) certificate holders so audit frequency can be extended from every 3 years to every 5 years.

Item Under Consideration: Amend NCWM Publication 14, Administrative Policy, Section 21.3.2.16. NTEP VCAP Procedures as follows:

3. NTEP Verified Conformity Assessment Program Procedures

…

21.1.3.2.16. Subsequent audits will be held on-site to verify conformance to these standards. ~~**Subsequent audits will be conducted every three years until objective evidence is obtained to move to a maximum of every five years.**~~ **The first subsequent audit shall be conducted within three years of the initial audit, after which the audit frequency becomes five years.**

…

Amend NCWM Publication 14, Administrative Policy, Section 21.3.7.10. NTEP VCAP Procedures for Private Label Certificate Holders as follows:

21.1.3.7.10. Surveillance audits for VCAP conducted by an outside auditor ~~**representing a certification every three years until objective evidence is obtained to move to a maximum of every five years**~~. **A subsequent surveillance audit shall be conducted within three years of the initial audit, after which the audit frequency becomes five years.**

Justification: Creation of objective criteria to extend the audit frequency that is currently lacking in the NTEP Administrative Policy.

Discussion: NTEP administration previously discussed the proposals and did not support them as written but would consider support if: a) the criteria were changed to require both audits to be performed by the same auditor; and b) the criteria were changed to place the responsibility/decision of extending the resetting of the audit time line, based upon the criteria, to the auditor. The Scale Manufacturers Association (SMA) voiced opposition to these comments from NTEP. Several manufacturers were concerned that it would make the decision too subjective and that it can be difficult to have the same auditor for 2 consecutive audits. A manufacturer recommended that the 5-year interval for audits be automatic based on consecutive successful audits.

Based on comments received, the Committee replaced the original SMA proposal as shown in the Item Under Consideration and will present the item to the NCWM Board of Directors for consideration at the 2019 NCWM Annual Meeting. The original SMA proposal is as follows:

21.1.3.2.16. ~~**Subsequent audits will be held on-site to verify conformance to these standards. Subsequent audits will be conducted every three years until objective evidence is obtained to move to a maximum of every five years.**~~

Surveillance audits shall be conducted at the manufacturer's facility to verify conformance to these standards. These audits will be conducted every (3) years until the following criteria has been met:

This publication is available free of charge from: https://doi.org/10.6028/NIST.SP.1253

- **The manufacturer has completed at least (2) surveillance audits by a VCAP auditor.**
- **No major non-conformances are reported on the previous (2) surveillance audits.**
- **All actions taken to correct minor non-conformances have been verified and accepted by the auditor.**

Once these criteria have been met the manufacturer may notify the VCAP administrator and request that the surveillance audit schedule be extended to every (5) years. The (5) year audit schedule will apply until any of the criteria is not met, at which point the audit schedule will reset back to every (3) years and the process will begin anew.

…

21.1.3.7.10. ~~**Surveillance audits for VCAP conducted by an outside auditor representing a certification every three years until objective evidence is obtained to move to a maximum of every five years.**~~

Surveillance audits shall be conducted at the manufacturer's facility to verify conformance to these standards. These audits will be conducted every (3) years until the following criteria has been met:

- **The manufacturer has completed at least (2) surveillance audits by a VCAP auditor.**
- **No major non-conformances are reported on the previous (2) surveillance audits.**
- **All actions taken to correct minor non-conformances have been verified and accepted by the auditor.**

Once these criteria have been met the manufacturer may notify the VCAP administrator and request that the surveillance audit schedule be extended to every (5) years. The (5) year audit schedule will apply until any of the criteria is not met, at which point the audit schedule will reset back to every (3) years and the process will begin anew.

OTH – OTHER ITEMS

OTH-1 I Electronic Vehicle Fueling Systems (EVFS)

Source:
California Division of Measurement Standards & NTEP Measuring Laboratories

Item Under Consideration:
Work with U.S. National Work Group Representatives and other experts to develop an NTEP checklist for electronic vehicle supply equipment (EVSE).

Background/Discussion:
In July 2015, the NCWM adopted a tentative code for electronic vehicle fueling systems. The tentative code includes a provision that allows NTEP to accept EVSE for type evaluation to the NIST Handbook 44 code. The USNWG for EVSE developed the tentative code in Handbook 44 and has been working to address evaluation criteria (NTEP checklist) and test standards to be used.

The NTEP Measuring Labs discussed the item during their meeting on September 20, 2016. The consensus of the laboratories was that the examination procedure outline developed by the State of California was not in a proper NCWM Publication 14 checklist format. Another prime issue that is still being developed is the test equipment

This publication is available free of charge from: https://doi.org/10.6028/NIST.SP.1253

necessary to test these devices. NTEP cannot evaluate without standards for test equipment. Will NIST traceability be required? The Measuring Laboratories concluded that the present NCWM Publication 14 checklist for RMFDs would be a good starting point to use in drafting a NCWM Publication 14 checklist for EVSE. The NTEP Administrator and NTEP Measuring Laboratories recommended the NCWM Board of Directors / NTEP Committee consider establishing an NTEP Work Group or Task Force to address the EVSE issues.

The NTEP Committee agreed with the recommendations of the NTEP Measuring Laboratories and worked to establish a NTEP EVSE Work Group (WG). The NTEP EVSE Work Group was developed with Mr. Andrei Moldoveanu, Senior Program Manager (NEMA) appointed as Chair. At the time it was established, the WG consisted of three public sector members and five private sector members representing associate membership.

The NTEP EVSE Work Group (WG) had its kick-off web-based meeting March 14, 2017. The WG had monthly web meetings with the initial goal of having a draft checklist ready for NCWM Board/NTEP Committee review. Significant progress has been made and during the 2018 Interim Meeting the NTEP Committee reviewed the updated Work Group's draft NTEP checklist. NTEP was given permission to proceed with checklist development and evaluations as deemed appropriate. NTEP is working with NIST/OWM to ensure proper requirements for test standards and test procedures are in place. Some technical policy issues still need to be worked out. Additionally, NTEP found that many of these devices also have a timing feature to allow a charge for parked time (similar to a parking meter). NTEP will work to develop a timing feature supplemental checklist to the EVSE checklist.

The CA Lab has acquired EVSE test standards and is now performing validation testing. NTEP expects to perform the initial evaluation of an EVSE device in 2019. For questions on the status of the work group please contact NTEP Administrator Mr. Darrell Flocken at **darrell.flocken@ncwm.com**.

OTH-2 I Create a NCWM Publication 14 Category for Software

Source: NTEP Software Sector

Item Under Consideration:
Create a NCWM Publication 14 Software category, which includes requirements, considerations, and test procedures common to all software-based devices, including software-only products.

Background/Discussion:
There is no single NCWM Publication 14 device category in which to place software-specific requirements, considerations, and test procedures. Since most modern measurement devices contain software, to appropriately address any concerns each section of NCWM Publication 14 must include all software considerations. Further, each device section has a different governing NTEP Sector, which makes the process of change an exercise in convincing each Sector to make needed additions, while keeping those additions harmonized across Sectors; an effort that has proven very difficult and time consuming.

Such a software section might include the following:

1. Models to be submitted for evaluation
    a. What constitutes approved software?
        i. Measurement and presentation
        ii. Calculations based on a measured value
        iii. Manual entry of measured value
        iv. Other
    b. Application of software may lead to additional NCWM Publication 14 section consideration
    c. Minimum computing requirements statement

This publication is available free of charge from: https://doi.org/10.6028/NIST.SP.1253

2. Software Identification
    a. Appropriate means of 'marking' metrologically significant software
    b. Software Separation and marking consequences
    c. Relationship between software and software identifier
    d. Presentation of software identifier
        i. Example icons and menu text
        ii. Exceptions
3. Protection against unauthorized software change
    a. How is software "sealed"?
    b. Remote software update considerations
    c. Audit trail (if employed) requirements for software updates
4. Accuracy of data calculations
    a. When to stop evaluating calculations & data manipulation
5. Software Evaluation Checklist

Future Topics

1. Distributed software considerations
    a. Securing communications between metrologically significant distributed software modules or components of a system

The NTEP Committee reviewed and discussed the proposal from the NTEP Software Sector. The Committee is very interested in this idea but heard no comment during the 2018 Interim Meeting open hearings. During the 2018 Annual Meeting open hearings, NTEP Software Sector Chair Jim Pettinato encouraged the Committee to seriously consider and move forward with the proposal. The Sector thinks this would improve the type evaluation process and avoid deviation in language or requirements from NCWM Publication 14 section to NCWM Publication 14 section. Mr. Pettinato also pointed out that internationally there is a separate document for software. At the 2019 Interim Meeting, Mr. Pettinato stated that he is drafting an outline of what would appear in NCWM Publication 14 and noted the information in the section would be general in nature.

The Board of Directors and NTEP Committee plan to move forward and allow the NTEP Software Sector to begin development of a software checklist section for NCWM Publication 14. The Committee is requesting additional input from manufactures, NTEP sectors, and others from the weights and measures community.

Mr. James Cassidy, Massachusetts | NTEP Committee Chair
Mr. Brett Gurney, Utah | NCWM Chairman
Mr. Craig VanBuren, Michigan | NCWM Chair-Elect
Mr. Hal Prince, Florida | Member
Mr. Jack Walsh, Town of Wellesley, Massachusetts | Member
Mr. Darrell Flocken, NCWM | NTEP Administrator

National Type Evaluation Program Committee

Appendix A

NTEP Statistics Report

General NTEP Statistics	Last Year	This Year
	10/01/17 – 9/30/18	10/01/18 – 03/15/19
Total Applications Processed	(15) 295	(17) 156
Applications Completed	288	157
New Certificates Issued	273	147
Active NTEP Certificates		2113

( ) = Reactivations

Assignments to Labs per Year	10/1/16 – 9/30/17	10/01/18 – 3/15/19
California	23	12
Canada	1	0
FGIS-IL	0	0
FDIS-KC	9	1
Kansas	3	2
Maryland	18	1
New York	(5) 32	(1) 8
NIST Force Group	6	2
North Carolina	11	2
Ohio	83	34
Oregon	0	0
NTEP Field	11	2
NTEP Administrator	101	(1) 84
Applications Not Yet Assigned to a Lab	0	4

( ) = Reassignments from another lab

Process Statistics	10/2008 - Present
Average Time to Assign an Evaluation	4.2 Days
Average Time to Complete an Evaluation	84.4 Days

This publication is available free of charge from: https://doi.org/10.6028/NIST.SP.1253

This publication is available free of charge from: https://doi.org/10.6028/NIST.SP.1253

Report on Evaluations in Progress

Evaluations in Progress	0-3 Months	3-6 Months	6-9 Months	9-12 Months	Over 1 Year	Total
March 31, 2015	43	24	10	13	17	106
June 30, 2015	39	21	12	5	15	107
September 18, 2015	28	20	8	5	12	92
December 23, 2015	43	14	5	7	13	73
March 31, 2016	48	15	7	6	8	82
June 30, 2016	57	13	7	3	7	84
September 30, 2016	60	31	9	5	7	87
December 22, 2016	34	30	21	6	9	112
March 30, 2017	45	14	6	12	7	100
June 30, 2017	42	27	5	5	11	84
September 30, 2017	32	21	16	4	14	90
December 31, 2017	38	15	15	9	13	90
March 31, 2018	44	15	8	10	12	89
June 30, 2018	55	28	9	4	12	108
September 30, 2018	39	27	14	3	7	90
December 31, 2018	42	17	18	11	8	96
March 15, 2019	**36**	**16**	**11**	**13**	**15**	**91**

In Progress by Lab	0-3 Months	3-6 Months	6-9 Months	9-12 Months	Over 1 Year	Total
California	7	3	3		2	**15**
Canada						**0**
FGIS-IL						**0**
FGIS-KC			1	6	2	**9**
Kansas	1	1				**2**
Maryland	1			4	9	**14**
New York	3		1			**4**
NIST Force Group	1			1	2	**4**
North Carolina	1					**1**
Ohio	10	11	3	2		**26**
Oregon						**0**
NTEP Staff	8	1	3			**12**
Unassigned	4					**4**
					Total Pending:	**91**

10-Year Report on Applications Received by Quarter

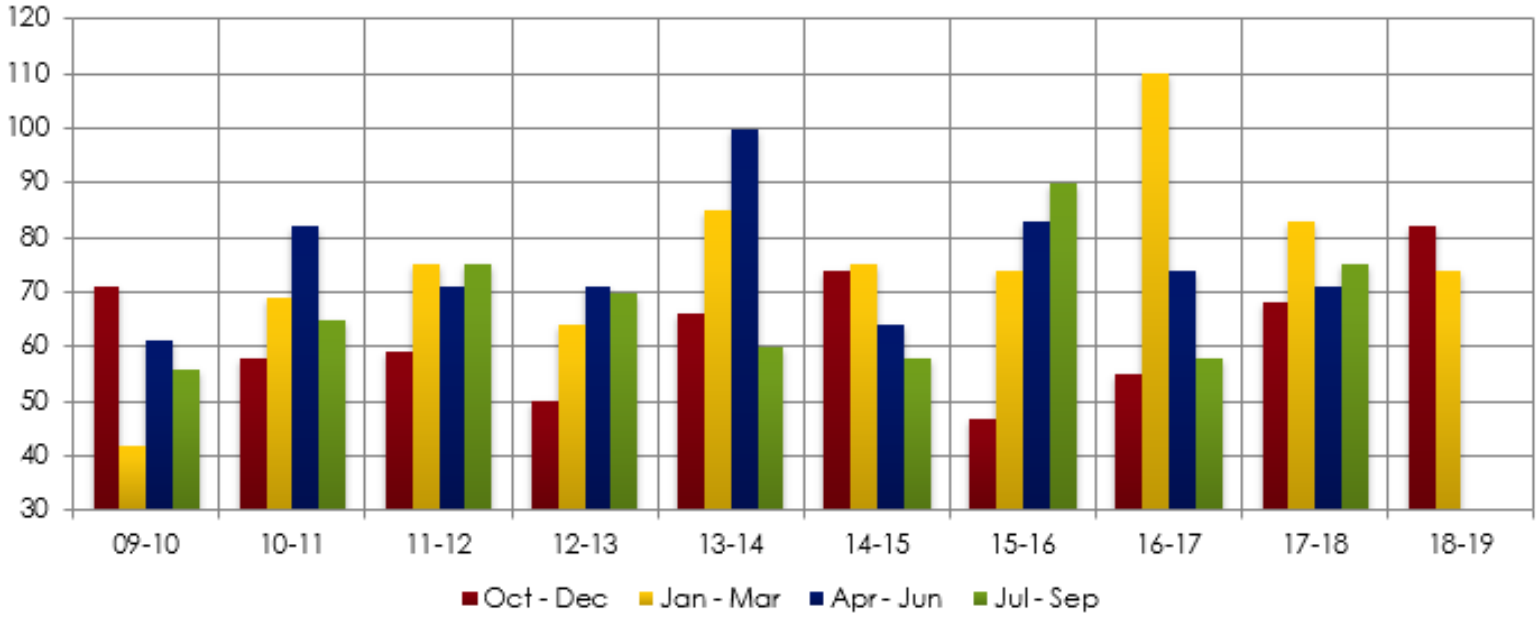

	09-10	10-11	11-12	12-13	13-14	14-15	15-16	16-17	17-18	18-19
Oct – Dec	71	58	59	50	66	74	47	55	68	82
Jan – Mar	42	69	75	64	85	75	74	110	83	74*
Apr – Jun	61	82	71	71	100	64	83	74	71	
Jul - Sep	56	65	75	70	60	58	90	58	73	
Total	**230**	**274**	**280**	**255**	**311**	**271**	**294**	**297**	**295**	**156**

Average Per Quarter: 10-YR: **70.1**

Average Per Quarter This FY: **78.0**

*** Only includes applications through March 15**

This publication is available free of charge from: https://doi.org/10.6028/NIST.SP.1253

This publication is available free of charge from: https://doi.org/10.6028/NIST.SP.1253

THIS PAGE INTENTIONALLY LEFT BLANK

Appendix B

National Type Evaluation Program (NTEP)
Belt-Conveyor Scale (BCS) Sector Meeting Summary

(No BCS Meetings were held during the 2018-2019 reporting period. This appendix was included in the NTEP Committee's report as a placeholder for future BCS meeting summaries.)

INTRODUCTION

The charge of the BCS Sector is important in providing appropriate type evaluation criteria based NIST Handbook 44, "Specifications, Tolerances, and Other Technical Requirements for Weighing and Measuring Devices," Sections 1.10. General Code and 2.21. BCS Systems. The Sector's recommendations are presented to the National Type Evaluation Program (NTEP) Committee each January for approval and inclusion in NCWM Publication 14, "Technical Policy, Checklists and Test Procedures" for National Type Evaluation.

The Sector is also called upon occasionally for technical expertise in addressing difficult NIST Handbook 44 issues on the agenda of National Conference on Weights and Measures (NCWM) Specifications and Tolerances (S&T) Committee. Sector membership includes industry, NTEP laboratory representatives, Technical Advisors, and the NTEP Administrator. Meetings are held annually, or as needed and are open to all NCWM members and other registered parties.

This publication is available free of charge from: https://doi.org/10.6028/NIST.SP.1253

This publication is available free of charge from: https://doi.org/10.6028/NIST.SP.1253

THIS PAGE INTENTIONALLY LEFT BLANK

This publication is available free of charge from: https://doi.org/10.6028/NIST.SP.1253

Appendix C

National Type Evaluation Program
Grain Analyzer Sector
Meeting Summary

September 27, 2018

INTRODUCTION

The charge of the NTETC Grain Analyzer Sector is important in providing appropriate type evaluation criteria based on specifications, tolerances and technical requirements of NIST Handbook 44 Sections 1.10. General Code, 5.56. Grain Moisture Meters and 5.57. Near-Infrared Grain Analyzers. The sector's recommendations are presented to the National Type Evaluation Program (NTEP) Committee each January for approval and inclusion in NCWM Publication 14 Technical Policy, Checklists, and Test Procedures for national type evaluation.

The sector is also called upon occasionally for technical expertise in addressing difficult NIST Handbook 44 issues on the agenda of National Conference on Weights and Measures (NCWM) Specifications and Tolerances (S&T) Committee. Sector membership includes industry, NTEP laboratory representatives, technical advisors, and the NTEP Administrator. Meetings are held annually, or as needed and are open to all NCWM members and other registered parties.

Suggested revisions are shown in **bold face print** by ~~**striking out**~~ information to be deleted and **underlining** information to be added. Requirements that are proposed to be nonretroactive are printed in ***bold faced italics***.

Table A
Table of Contents

This publication is available free of charge from: https://doi.org/10.6028/NIST.SP.1253

Table B
Glossary of Acronyms and Terms

Acronym	Term	Acronym	Term
BIML	International Bureau of Legal Metrology	NTEP	National Type Evaluation Program
CD	Committee Draft	OCP	Ongoing Calibration Program
CIML	International Committee of Legal Metrology	OIML	International Organization of Legal Metrology
CIPM	International Committee of Weights and Measures	OWM	Office of Weights and Measures
D	Document	R	Recommendation
EMRP	European Metrology Research Program	S&T	Specifications and Tolerances
FGIS	Federal Grain Inspection Service	SC	Subcommittee
GA	Grain Analyzer	SD	Secure Digital
GIPSA	Grain Inspection, Packers and Stockyards Administration	TC	Technical Committee
GMM	Grain Moisture Meter	TW	Test Weight
MRA	Mutual Recognition Arrangement	UGMA	Unified Grain Moisture Algorithm
NCWM	National Conference on Weights and Measures	USB	Universal Serial Bus
NIR	Near Infrared Grain Analyzer	USDA	United States Department of Agriculture
NIST	National Institute of Standards and Technology	USNWG	United States National Working Group

Details of All Items
(In order by Reference Key)

1. Report on the 2018 NCWM Interim and Annual Meetings

The 2018 NCWM Interim Meeting was held January 21 – 24, 2018 in St. Pete Beach, Florida and the 2018 NCWM Annual Meeting was held July 15-19, 2018 in Tulsa, Oklahoma. At these meetings, there were no Grain Analyzer Sector recommended changes to NCWM Publication 14 or NIST Handbook (HB) 44. The Grain Analyzer Sector originally submitted an item on the S&T agenda, which was subsequently reassigned to NIST, OWM for development. See Grain Analyzer Agenda Item 4 "Address Devices and Systems Adjusted Using a Removable Digital Storage Device."

Mr. Jim Truex (NTEP Administrator) provided an update on the annual meeting and software sector activities. Mr. Truex noted that S&T Items B7: GEN-2 and B7: GMM-2, "Address Devices and Systems Adjusted Using a Removable Digital Storage Device," which was originally proposed by the Grain Analizer Sector, then further developed by NIST, OWM because of its impact to all devices, remains a developing item. The sector provided no additional comments on thses items. He also informed the GA sector that the software sector has been encouraged to incorporate a separate software section in NCWM Publication 14.

2. Report on NTEP Evaluations and Ongoing Calibration Program (OCP) (Phase II) Testing

Mr. Jason Jordan (Grain Inspection, Packers and Stockyards Administration (GIPSA), the NTEP Participating Laboratory for grain analyzers) provided a list of grain analyzers that were enrolled in the 2018 Ongoing Calibration Program (OCP); there are 8 grain analyzer models enrolled.

This publication is available free of charge from: https://doi.org/10.6028/NIST.SP.1253

The 8 models:

1. Dickey-john Corp. – GAC2500-UGMA
2. Dickey-john Corp. – GAC2000, GAC2100, GAC2100a and GAC2100b
3. Perten Instruments Inc. - AM5200 and AM5200-A (UGMA)
4. Perten Instruments Inc. – IM9500 and IM9500 HLW/TW
5. Foss North America – Infratec 1241
6. Foss North America – Infratec Nova
7. The Steinlite Corp. – SL95
8. MTC Moisture Analyzers – MTC 999 ES

Mr. Jordan provided the sector with an update on the NTEP Phase I evaluations and reported on the collection and analysis of the Phase II OCP data from the 2018 crop year and any changes to NTEP meters in the Phase II OCP. Mr. Jordan reported that the same 8 models as listed above are in the 2018 Phase II OCP. He reported two issues with grains which were that medium grain rough rice experienced unusually high rainfall during the 2017 growing season, and that wheat samples currently being harvested in 2018 have unusually low test weight that could be due to drought situations in parts of the country. He noted that the NTEP laboratory is monitoring these samples.

Mr. Jordan also reported that one of the two instrument for a single model in the Phase II OCP program needed repairs during the collection of data. The instrument was returned to the manufacturer for repair and data was collected on one of the models until the other was returned. This resulted in one of instrument for that model missing approximately 11% of the data collection. But, based on all the data collected, the NTEP laboratory is confident in the calibrations for that instrument model. Mr. Jordan mentioned that currently there are no administrative procedures in NTEP Publication 14 for Grain Analyzers to addresses this issue. As such the Sector discussed and made the following comments and suggestions to address this issue:

- Remove the instrument from the Phase II OCP when sufficient data is not available for assurance of adequate meter calibrations and for comparison to other instruments.
- Manufacturer can exchange instrument and/or fix existing instrument.
- Manufacturer must make repairs in a timely manner.
- If calibrations fail the calibration is not included on the certificate.

Following the discussion of this issue, the Sector recommended that language be added to Publication 14 for GA's that includes that a manufacturer must repair both instruments within a timely matter prior to the Phase II OCP to ensure that all samples are tested on both instrument models in the program. Ms. Cathy Brenner and Mr. Jason Jordan agreed to work on recommended language to add to publication 14 to address this issue. It was noted that proposed language should be submitted in September 2018. Following the Grain Analyzer Sector meeting Ms. Brenner and Mr. Jordan submitted the following proposed language for changes to the NTEP application:

To achieve full benefits of the Phase II Ongoing Calibration Program, manufacturers must meet the following requirements by July 1 of each year of participation:

1. **Standardization results, as defined by the NTEP laboratory and manufacturer, must be submitted to the NTEP laboratory.**
2. **Two functional units of the same model must be installed at the NTEP testing laboratory and verified.**
3. **Both units must have all required calibrations corresponding to the current Certificate of Conformance installed and ready for testing.**

This publication is available free of charge from: https://doi.org/10.6028/NIST.SP.1253

In the event of an instrument malfunction during the Ongoing Calibration Program, the manufacturer must provide an appropriate course of action for resolving the issue to the NTEP laboratory within one week of being notified of the malfunction. Agreement on the proposed course of action will allow one additional week (2 weeks total) for the manufacturer to implement the proposed resolution and have the instrument back to the NTEP laboratory to resume testing.

Any instrument that enters the program without complying to the above requirements will have any calibrations that were not fully tested be removed from the associated NTEP Certificate of Conformance. The certificate may also be declared expired by NTEP.

3. Review of OCP (Phase II) Performance Data for Moisture and Test Weight per Bushel

At the Sector's August 2005 meeting it was agreed that comparative OCP data identifying the Official Meter and listing the average bias for each NTEP meter type should be available for annual review by the sector. Accordingly, Mr. Jordan (GIPSA, the NTEP Participating Laboratory for grain analyzers) provided data for inclusion in the 2018 Grain Analyzer Sector Meeting Agenda showing the performance of NTEP meters compared to the air oven. This data is based on the last three crop years (2015 – 2017) using calibrations updated for use during the 2017 harvest season.

At the Sector's August 2012 meeting, it was agreed that Test Weight (TW) comparison and correlation charts should be prepared for the 3 grains which are most likely to be subject to discounts on the basis of TW: Corn and two wheat classes and limited to Air Oven reference values less than 20% moisture. The wheat classes selected were: Hard Red Winter and Soft Red Winter. Accordingly, Mr. Jordan prepared data showing the performance of NTEP meters compared to the GIPSA reference Quart Kettle Test Weight Apparatus. Mr. Jordan will provide an update of this information for the Grain Analyzer Sector meeting agenda. This data is based on the last three crop years (2015 – 2017) using calibrations updated for use during the 2017 harvest season.

The 2015-2017 Grain Moisture Meter (GMM) Phase II comparison graphs are available for view or can be downloaded for printing on the NCWM website at **www.ncwm.com**.

At the 2018 GA Sector meeting, the 2015-2017 Grain Moisture Meter (GMM) Phase II comparison graphs were reviewed and no comments were received. Discussion of an instruments, where partial data was collected during the Phase II OCP were discussed during item 2 of this Summary.

4. Address Devices and Systems Adjusted Using a Removable Digital Storage Device (S&T Developing Item B7: GEN-2 and B7: GMM-2)

Source:
Originally proposed by the Grain Analyzer Sector but because NIST OWM recognized that this item would affect other device types, it was reassigned to NIST OWM for further development.

Purpose:
Table S.2.5. Categories of Device and Methods of Sealing that appears in §5.56. (a) of NIST Handbook 44 lists acceptable methods of sealing for various categories of GMMs. When the sector first recommended adding the table to NIST Handbook 44 at their September 1996 meeting, the concept of making a change to a GMM from a remote site involved information sent by to the device by modem (or computer). In 2011 this concept expanded to include the ability of the measuring device to accept new or revised sealable parameters from a memory chip (e.g., an SD Memory Card that may or may not itself be necessary to the operation of the device, external computer, network, or other device plugged into a mating port (e.g., Universal Serial Bus (USB) port) on the measuring device or connected wirelessly to the measuring device. The original changes proposed by the GA Sector included changes to the definition for "remote configuration" to cover instances where the "other device" may be necessary to the operation of the weighing or measuring device or which may be considered a permanent part of that device. NIST OWM revised the

This publication is available free of charge from: https://doi.org/10.6028/NIST.SP.1253

original proposal put forward by the GA Sector and developed a proposed General Code requirement G-S.8.2 to address all devices using a removable digital storage device.

Item Under Consideration:
Modify the General Code by adding the following paragraph to address security for systems adjusted using removable media:

> **G-S.8.2. Devices and Systems Adjusted Using Removable Digital Storage Device. - For devices and systems in which the configuration or calibration parameters can be changed by use of a removable digital storage device*, such as a secure digital (SD) card, USB flash drive, etc., security shall be provided for those parameters using either (1) an event logger in the device; or (2) a physical seal, that must be broken in order to remove the digital storage device from the device (or system). If security is provided using an event logger, the event logger shall include an event counter (000 to 999), the parameter ID, the date and time of the change, and the new value of the parameter. A printed copy of the information must be available on demand through the device or through another on-site device. In addition to providing a printed copy of the information, the information may be made available electronically. The event logger shall have a capacity to retain records equal to 10 times the number of sealable parameters in the device, but not more than 1000 records are required. (Note: Does not require 1000 changes to be stored for each parameter.)**
>
> ***Applies only to removable digital storage devices that must remain in the device or system for it to be operational.**
>
> **(Added 20XX)**

Add language to the current sealing requirements for devices and systems adjusted using a removable digital storage device by proposing changes to the sealing requirements in the following NIST HB 44 code sections because the proposed General Code paragraph will address the sealing of all device types and systems: 2.20., 2.21., 2.22., 2.24., 3.30., 3.31., 3.32., 3.33., 3.34., 3.35., 3.36., 3.37., 3.38., 3.39, 3.40., 5.55., 5.56. (a), and 5.58.

The following is the proposed changes to the Grain Moisture Meter NIST HB 44, Section 5.56(a):

Item Under Consideration:

Modify 5.56.(a) Grain Moisture Meters Code as follows:

> **S.2.5. Provision for Sealing.** – **For devices and systems in which the configuration or calibration parameters can be changed by use of a removable digital storage device, security shall be provided for those parameters as specified in G-S.8.2. For parameters adjusted using other means, the following applies:**
>
> Provision shall be made for applying a security seal in a manner that requires the security seal to be broken, or for using other approved means of providing security (e.g., audit trail available at the time of inspection as defined in Table S.2.5. Categories of Device and Methods of Sealing) before any change that affects the metrological integrity of the device can be made to any mechanism.
> **(Amended 20XX)**

(NOTE: The paragraphs below are currently being discussed by the GA Sector. See discussion of these proposed changes in Agenda Item 5)

S.2.5.3. *An event logger is required in the device; it must include an event counter (000 to 999), the parameter ID, the date and time of the change, and the new value of the parameter (for calibration changes consisting of multiple constants, the calibration version number may be used rather than the calibration constants.)*
*A printed copy of the information must be available through the device or through another on-site device. The event logger shall have a capacity to retain records equal to 25 times the number of sealable parameters in the device, but not more than 1000 records are required. (**Note:** Does not require 1000 changes to be stored for each parameter.)*
[Nonretroactive as of January 1, 20XX]

(Amended 20XX)

This publication is available free of charge from: https://doi.org/10.6028/NIST.SP.1253

Background / Discussion:
Two common types of removable data storage devices are the USB flash drive and the Secure Digital (SD) memory card. A USB flash drive is a data storage device that includes flash memory with an integrated USB interface. USB flash drives are typically removable and rewritable, and physically much smaller than a floppy disk. A SD card is a non-volatile memory card format originally designed for use in portable devices. The SD standard is maintained by the SD Card Association.

Removable digital storage devices can be used in GMMs as either "data transfer" devices which are not necessary to the operation of the GMM or as "data storage devices" which are necessary to the operation of the GMM.

A USB flash drive is most likely to be used as a "data transfer" device. In a typical "data transfer" application, the USB flash drive is first connected to a computer with access to the web. The computer visits the GMM manufacturer's web site and downloads the latest grain calibrations that are then stored in the USB flash drive. The USB flash drive is removed from the computer and plugged into a USB port on the GMM. The GMM is put into "remote configuration" mode to copy the new grain calibration data into the GMM's internal memory. When the GMM has been returned to normal operating (measuring) mode the USB flash drive can be removed from the GMM.

Although an SD memory card could also be used as a "data transfer device", it is more likely to be used as a "data storage device". In a typical "data storage device" application, the SD memory card stores the grain calibrations used on the GMM. The SD memory card must be plugged into an SD memory card connector on a GMM circuit card for the GMM to operate in measuring mode. To install new grain calibrations the GMM must be turned "off" or put into a mode in which the SD memory card can be safely removed. The SD memory card can either be replaced with an SD memory card that has been programmed with the new grain calibrations or the original SD memory card can be re-programmed with the new grain calibrations in much the same way as that described in the preceding paragraph to copy new grain calibrations into a USB flash drive. In either case, the SD memory card containing the new calibrations must be installed in the GMM for the GMM to operate in measuring mode. In that regard, the SD memory card can be considered a "permanent part" of the GMM in that the GMM cannot operate without it.

Note: In the above example "SD memory card" could be any removable flash memory card such as the Secure Digital Standard-Capacity, the Secure Digital High-Capacity, the Secure Digital Extended-Capacity, and the Secure Digital Input/Output, which combines input/output functions with data storage. These come in three form factors: the original size, the "mini" size, and the "micro" size. "Memory Stick" is a removable flash memory card format, launched by Sony in 1998, and is also used in general to describe the whole family of Memory Sticks. In addition to the original Memory Stick, this family includes the Memory Stick PRO, the Memory Stick Duo, the Memory Stick PRO Duo, the Memory Stick Micro, and the Memory Stick PRO-HG.

See the **NCWM S&T Committee 2013 – 2016 Final Reports** and the Grain Analyzer Sector 2013-2016 summaries for additional background information and to review the different proposals considered by the NCWM S&T Committee and Grain Analyzer Sectors.

During the 2017 GA Sector meeting, the Sector members reviewed the proposed changes and by consensus agreed with the proposed changes to NIST Handbook 44, Section 5.56(a) and the General Code. The Sector recognized that the proposed paragraph S.2.5.3 included in the item for consideration as changes to NIST HB 44 Section 5.56(a) is still under discussion (See agenda Item 5 in this agenda) and is not currently being proposed for consideration.

During the 2018 meeting, Ms. Diane Lee (NIST OWM Technical Advisor) updated the Sector on the status of S&T Item B7: Gen-2 and B7: GMM-2 following the 2018 NCWM Annual Meeting. The Sector was informaed that the items remain developing. Two questions were raised during the GA Sector Meeting:

- Why does the proposed S&T item B7 Gen-2 apply only to removable storage devices that must remain in the device, and
- do these changes addressed access to sealable parameter via the cloud?.

In responce to the first question, it was explained that the sector's original proposal was to change the definition of remote configuration because the definition applies to changes made to a system through some other device that "is

not itself necessary to the operation". But, some grain analyzers do not meet the definition of remote configuration. Some grain analyzers have digital storage devices that "are necessary to the operation of the device". So the existing language for remote confirguration applies to those devices that are not necessary to the operation of the device and the new language address those removable storage devices that are necessary to the operation of the device. In response to the second question, it was explained that the issue of changes to devices made via the cloud are being addressed by the software sector.

Conclusion:
The Sector is in agreement with S&T Items B7 Gen-2 and GMM-2.

5. Adding a Nonretroactive Requirement to NIST HB 44 Grain Moisture Meter Code 5.56(a) that Grain Moisture Meters meet Category 3 Sealing Requirements

Source:
Grain Analyzer Sector

Purpose:
At the 2016 Grain Analyzer Sector Meeting during its discussion of Agenda Item 4 Address Devices and Systems Adjusted Using a Removable Digital Storage Device (S&T Developing Item B7: Gen-2 and B7: GMM-2) previously titled "Modify the Definition of Remote Configuration Capability that is defined in Appendix D of NIST Handbook 44 to Recognize the Expanded Scope of "Remote Configuration Capability" (S&T Developing item 3600-5)" on the GA Sector Meeting Agenda, it was noted that the current technology for sealing grain moisture meters are with event loggers (category 3 sealing requirements). Due to the complexity of these devices, a Category 3 sealing provides a record of what calibration and configuration parameters were changed. As such, the GA Sector discussed including a non-retroactive requirement for category 3 sealing for all grain moisture meters. Currently NIST HB 44 NIR code for devices that measure protein, oil and starch requires that the device be sealed with an event logger. These meters also measure moisture and currently meet category 3 requirements.

Item Under Consideration:

The GA Sector's technical advisor included the following proposal for changes to the Grain Analyzer Code 5.56(a) in the 2016 Grain Analyzer Sector Summary for review:

S.2.5. Provision for Sealing.

…

S.2.5.3. *An event logger is required in the device; it must include an event counter (000 to 999), the parameter ID, the date and time of the change, and the new value of the parameter (for calibration changes consisting of multiple constants, the calibration version number may be used rather than the calibration constants.)*

*A printed copy of the information must be available through the device or through another on-site device. The event logger shall have a capacity to retain records equal to 25 times the number of sealable parameters in the device, but not more than 1000 records are required. (**Note:** Does not require 1000 changes to be stored for each parameter.)*

[Nonretroactive as of January 1, 20XX]

(Amended 20XX)

This publication is available free of charge from: https://doi.org/10.6028/NIST.SP.1253

Mr. Doug Musick (Kansas) submitted the following alternate proposal:

Table S.2.5. ***Categories of Device and Methods of Sealing***	
Categories of Device	***Methods of Sealing***
Category 1[1]: *No remote configuration capability.*	*Seal by physical seal or two event counters: one for calibration parameters (000 to 999) and one for configuration parameters (000 to 999). If equipped with event counters, the device must be capable of displaying, or printing through the device or through another on-site device, the contents of the counters.*
Category 2[1]: *Remote configuration capability, but access is controlled by physical hardware.* *A device shall clearly indicate that it is in the remote configuration mode and shall not be capable of operating in the measure mode while enabled for remote configuration.*	*The hardware enabling access for remote communication must be at the device and sealed using a physical seal or two event counters: one for calibration parameters (000 to 999) and one for configuration parameters (000 to 999). If equipped with event counters, the device must be capable of displaying, or printing through the device or through another on-site device, the contents of the counters.*
Category 3[2]: *Remote* ***and/or no remote*** *configuration capability access.* *Access may be unlimited or controlled through a software switch (e.g., password).* *When accessed for modifying sealable parameters, the device shall clearly indicate that it is in the configuration mode and shall not can operate in the measuring mode.*	*An event logger is required in the device; it must include an event counter (000 to 999), the parameter ID, the date and time of the change, and the new value of the parameter (for calibration changes consisting of multiple constants, the calibration version number may be used rather than the calibration constants). A printed copy of the information must be available through the device or through another on-site device. The event logger shall have a capacity to retain records equal to 25 times the number of sealable parameters in the device, but not more than 1000 records are required. (Note: Does not require 1000 changes to be stored for each parameter.)*
~~***Category 3a: No remote capability, but operator is able to make changes that affect the metrological integrity of the device (e.g., slope, bias, etc.) in normal operation.***~~ ~~****When accessed for the purpose of modifying sealable parameters, the device shall clearly indicate that it is in*** *the configuration mode and shall not be capable of operating in the measuring mode.*~~	~~***Same as Category 3***~~
~~***Category 3b: No remote capability, but access to metrological parameters is controlled through a software switch (e.g., password).***~~ ~~****When accessed for modifying sealable parameters, the device shall clearly indicate that it is in the configuration mode and shall not be capable of operating in the measuring mode.***~~	~~***Same as Category 3***~~

This publication is available free of charge from: https://doi.org/10.6028/NIST.SP.1253

[1] Not allowed for devices manufactured on or after January 1, 2019

[2] Required for all devices manufactured on or after January 1, 2019

[Nonretroactive as of January 1, 1999]
*[*Nonretroactive as of January 1, 2014]*
(Amended 1998**, ~~and~~** 2013**, and 20XX**)

Background / Discussion:
During discussion of Agenda Item 4 above during the 2016 GA Sector Meeting, it was suggested that the Grain Moisture Meter Code requirements for sealing be changed such that all grain moisture meters are required to meet category 3 sealing requirements as of a specific date; e.g., all grain moisture meters must have an event logger. With the increase in ease of switching out removable SD cards and making changes to metrological components it may be time to require a form of sealing that provides information on what was changed and the date of the change to the device. Category 3 sealing is currently required in NIST HB 44, Section 5.57, NIR Code. Manufacturers that were present at the meeting did not object to the proposal, but it was noted that all manufacturers were not represented at the meeting. During the 2016 GA sector meeting, Jim Truex (NTEP Administrator) also noted that we may need to consider State laws that require that a commercial device have a lead and wire seal. It was also mentioned that the proposed NIST, LMDP language for the general code would be redundant for the devices manufactured on or after the non-retroactive date because these meters will also require an event logger.

The current status for sealing methods of grain moisture meters are as follows:

Inactive Certificates of Conformance (CC):

- Nine inactive certificates; an inactive status for grain analyzers means that a CC was previously active for a device, but now the device is no longer being manufactured or remanufactured. Existing devices may be used, sold, or repaired and resold under inactive certificates. As such, these devices are likely still in use.
    - 3 inactive devices are *not* sealed using an event logger.

Active CC:

- Nine active certificates
    - 1 active device is *not* sealed using an event logger.

2017 Grain Analyzer Sector Meeting:
During the 2017 GA Sector Meeting, the Sector members reviewed the proposed changes and provide comments and discussion on the proposed language for changes to the sealing requirements in NIST HB 44, Section 5.56(a). During the discussion States participants noted that they would rather have an event logger as it provides more information than a lead and wire seal and noted that when seals are removed no information is available to determine what changes were made to the grain moisture meter and agreed that the Category 3 method of sealing provides much more information to determine the changes made to the device. Some discussion was held on implementation with some older meters still having Category 1 sealing while others new devices would have Category 3 devices. Mr. Karl Cunningham (Illinois) mentioned that they have a similar situation with NTEP and Non-NTEP meters in use in their State. Since as noted above currently, one active meter is not sealed using an event logger, the Sector recommended that additional work is needed to talk about impact of this requirement on manufacturers and to get additional feedback on an appropriate non-retroactive date for this proposed change.

2018 Grain Analyzer Sector Meeting:
During the 2018 GA Sector Meeting, the Sector reviewed two proposal to require that all Grain Analyzers meet the categaory 3 sealing requirements. The first proposal was to make a change to the Paragraph S.2.5 similir to the paragraph in the NIR code. The second proposal was to make changes to table S.2.5. The Sector chose the second proposal. This proposal makes it easier for transitioning to the new nonretroactive requirements that grain analyzers meet category 3 sealing requirements.

This publication is available free of charge from: https://doi.org/10.6028/NIST.SP.1253

Conclusion:
The GA Sector reviewed a Form 15. Proposal to Amend Handbooks, developed by Mr. Doug Musick (Kansas) and agreed to the following proposed changes to NIST HB 44 Section 5.56(a) Table S.2.5. Categories of Device and Methods of Sealing.

Table S.2.5. Categories of Device and Methods of Sealing	
Categories of Device	***Methods of Sealing***
Category 1[1]: *No remote configuration capability.*	*Seal by physical seal or two event counters: one for calibration parameters (000 to 999) and one for configuration parameters (000 to 999). If equipped with event counters, the device must be capable of displaying, or printing through the device or through another on-site device, the contents of the counters.*
Category 2[1]: *Remote configuration capability, but access is controlled by physical hardware.* *A device shall clearly indicate that it is in the remote configuration mode and shall not be capable of operating in the measure mode while enabled for remote configuration.*	*The hardware enabling access for remote communication must be at the device and sealed using a physical seal or two event counters: one for calibration parameters (000 to 999) and one for configuration parameters (000 to 999). If equipped with event counters, the device must be capable of displaying, or printing through the device or through another on-site device, the contents of the counters.*
Category 3[2]: ***~~Remote~~*** ***C~~c~~****onfiguration capability* ***access*** ***~~Access~~*** *may be unlimited or controlled through a software switch (e.g., password).* *When accessed for the purpose of modifying sealable parameters, the device shall clearly indicate that it is in the configuration mode and shall not be capable of operating in the measuring mode.*	*An event logger is required in the device; it must include an event counter (000 to 999), the parameter ID, the date and time of the change, and the new value of the parameter (for calibration changes consisting of multiple constants, the calibration version number may be used rather than the calibration constants). A printed copy of the information must be available through the device or through another on-site device. The event logger shall have a capacity to retain records equal to 25 times the number of sealable parameters in the device, but not more than 1000 records are required. (Note: Does not require 1000 changes to be stored for each parameter.)*
~~Category 3a: No remote capability, but operator is able to make changes that affect the metrological integrity of the device (e.g., slope, bias, etc.) in normal operation.~~ ***~~*When accessed for the purpose of modifying sealable parameters, the device shall clearly indicate that it is in the configuration mode and shall not be capable of operating in the measuring mode.~~***	***~~Same as Category 3~~***
~~Category 3b: No remote capability, but access to metrological parameters is controlled through a software switch (e.g., password).~~ ***~~*When accessed for the purpose of modifying sealable parameters, the device shall clearly indicate that it is in the configuration mode and shall not be capable of operating in the measuring mode.~~***	***~~Same as Category 3~~***

This publication is available free of charge from: https://doi.org/10.6028/NIST.SP.1253

[1] Not allowed for devices manufactured on or after January 1, 20XX

[2] Required for all devices manufactured on or after January 1, 20XX

[Nonretroactive as of January 1, 20XX]

~~*[*Nonretroactive as of January 1, 2014]*~~

(Amended 1998**,** ~~**and**~~ 2013**, and 20XX**)

6. Report on International Organization of Legal Metrology (OIML) TC 17/SC 1 R 59 *Moisture Meters for Cereal Grains and Oilseeds*

Background / Discussion:
This item is included on the Sector's agenda to provide a summary of the activities of OIML TC17/SC1 to the grain analyzer sector and to those Sector members that participate on the U.S. National Working Group (USNWG) on grain moisture meters.

OIML TC17/SC1 was tasked to revise OIML R 59 *Moisture Meters for Cereal Grains and Oilseeds* to reflect new technologies and actual grain analysis. The Co-Secretariats (China and the United States) worked closely with an International Project Group to revise OIML Recommendation R 59 *Moisture Meters for Cereal Grains and Oilseeds*.

As reported at the 2016 GA Sector Mmeeting, OIML R59 would be voted on at the 51st CIML Meeting. OIML R 59 *Moisture Meters for Cereal Grains and Oilseeds* was approved at the 51st CIML meeting, held October 17-21, 2016.

Grain moisture meter manufacturers were notified by e-mail on May 9, 2017 that OIML R59 2016 was published and available on the OIML website at **www.oiml.org/en/files/pdf_r/r059-p-e16.pdf**. In this e-mail, NIST OWM requested any feedback or statement on how this standard impacts your company that can be used in NIST highlights to demonstrate the impact of our work in OIML. If you have not provided a statement or feedback please send this information to **diane.lee@nist.gov**.

During the 2017 GA Sector meeting, the Sector members were reminded that OIML R59 2016 was revised and published and available on the OIML web site and that the requirements include many U.S. requirements for evaluating grain moisture meters making it easier for U.S. manufacturers to meet the global regulations and metrological controls set for these devices. Sector manufacturers were reminded to provide any feedback on how the Standard impacts their company (for example, providing feedback on experiences with the use of the international standard).

During the 2018 GA Sector meeting, manufacturers were asked to report on any impact from the use of this international standard. During the sector meeting, there were no reports on impact due to the use of OIML R59. It was reported that Mexico is looking into adopting requirements in R59.

Report on OIML TC 17/SC 8 *Protein Measuring Instruments for Cereal Grains and Oil Seeds*

Background / Discussion:
This item is included on the sector's agenda to provide a summary of the activities of OIML TC 17/SC 8 to the grain analyzer sector and to those Sector members that participate on the United States National Working Group (USNWG) on grain protein measuring instruments.

OIML TC17/SC8 was formed to study the issues and to develop a Recommendation on *Protein Measuring Instruments for Cereal Grain and Oil Seeds (OIML R 146).* Australia is the Secretariat for this subcommittee.

As reported at the 2016 GA Sector meeting, OIML R 146 would be voted on at the 51st CIML Meeting. OIML R 146 *Protein Measuring Instruments for Cereal Grain and Oil Seeds* was approved at the CIML meeting, held October 17-21, 2016.

This publication is available free of charge from: https://doi.org/10.6028/NIST.SP.1253

Grain moisture meter manufacturers were notified by e-mail on May 9, 2017 that OIML R146 *Protein Measuring Instruments for Cereal Grain and Oil Seeds* was published and available on the OIML website at **www.oiml.org/en/files/pdf_r/r146-p-e16.pdf** . In this e-mail, NIST OWM requested any feedback or statement on how this standard impacts your company that can be used in NIST highlights to demonstrate the impact of our work in OIML. If you have not provided a statement or feedback please send this information to **diane.lee@nist.gov**.

During the 2017 GA Sector meeting, the Sector members were reminded that OIML R146 2016 was published and available on the OIML web site and that the requirements include many U.S. requirements for evaluating grain protein analyzers making it easier for U.S. manufacturers to meet the global regulations and metrological controls set for these devices. Sector members were reminded to provide any feedback on how the OIML Recommendation impacts their company. For example, providing feedback on experiences with the use of the international standard.

During the 2018 GA Sector meeting manufacturers were asked to report on any impact from the use of this international standard. During the Sector meeting, there were no reports on impact due to the use of OIML R146.

7. Air-Oven Grain Moisture Proficiency/Collaborative Study/Interlaboratory Comparison Testing

Source:
Grain Analyzer Sector

Purpose:
Develop an air-oven proficiency/collaborative study/interlaboratory comparison testing program to ensure state laboratory and manufacturer's air-oven measurements are traceable to the official USDA GIPSA air-oven measurements.

Item Under Consideration:
Establish a timeline for consistent and periodic grain moisture proficiency testing.

Background/Discussion:
Under the NTEP program for grain moisture meters, calibrations are based on USDA, GIPSA air ovens while field inspection are based on State air ovens. For the program to be effective, procedures must be in place to assure that State oven results (and manufacturers' oven results) agree with the USDA, GIPSA air oven, which is considered the standard. NIST OWM's laboratory measurement traceability program requires that State Weights and Measures laboratories participate in interlaboratory and other collaborative experiments. State Weights and Measures programs with grain moisture laboratories typically meet this requirement by one of two methods: 1) laboratories independently send samples to GIPSA for air oven analysis and subsequently compare their results to those obtained by GIPSA; or 2) a structured collaborative study where every laboratory, including GIPSA, measure the same sample. A structured collaborative study has at least two advantages over independent submission of samples to GIPSA by individual laboratories: 1) in addition to a check against the "standard", it provides information on how individual labs compare with each other; and 2) it allows GIPSA to plan for a known work load.

A collaborative air oven study has been conducted with States and meter manufacturers periodically over a number of years and results discussed during the GA Sector meetings. These studies were conducted in 1995, 2001 and 2015.

At the 2009 NTETC Grain Analyzer Sector Meeting, Dr. Hurburgh (Iowa State University) urged the representatives from the American Oil Chemists' Society (AOCS) to prepare a proposal so that the collaborative (air-oven) study could be conducted on an on-going basis rather than on an ad hoc basis. He cautioned that the proposal would have to include corn and wheat, as well as soybeans, and at the 2011 NTETC Grain Analyzer Sector Meeting, Ms. Johnson, AOCS, proposed an air-oven/GMM proficiency testing series designed specifically to address the needs of GMM manufacturers and states maintaining a grain moisture laboratory. The intent was for the AOCS to administer, oversee distribution of samples, compile results, perform statistical analysis of results, and distribute a report to participants. AOCS does not collect the samples. This is subcontracted to suitable providers. AOCS does not have laboratories.

This publication is available free of charge from: https://doi.org/10.6028/NIST.SP.1253

This publication is available free of charge from: https://doi.org/10.6028/NIST.SP.1253

Since GIPSA, FGIS is a certified laboratory already participating in the AOCS Soybean Quality Traits program, GIPSA air-oven results could be reported for comparison.

At the Sector's August 2012 meeting, the Sector learned that Ms. Christine Atkinson (American Oil Chemists' Society) will be taking over the Proficiency Testing program for States and interested manufacturers; this program was formerly headed by Ms. Amy Johnson. Ms. Atkinson verified that participants' cost will remain $100 per year. The Sector reiterated that the program should focus solely on the standard FGIS air-oven method. Instrument results will not be reported. Participants' air-oven results will be compared against GIPSA's standard FGIS air-oven results. In response to Ms. Atkinson's question about scheduling, the sector was in general agreement that samples should ship after harvest, preferably between mid-January and mid-February with participants' results due 30 days after the shipping date.

The Sector agreed upon the following Program Details:

Samples – Soybeans 2, Corn 2, Hard Red Winter Wheat 2

- Cost to Participants - $100.00/year
- Schedule:
  - Samples (6) ship between January 15 and February 15.
  - Samples must be tested within 5 business days of receipt with results due 30 days after the shipping date.
- Reports to be posted online by 1 May.
- Only the GIPSA oven results will be identified. Individual manufacturer's and State participant's oven results will be assigned an identifier known only to the manufacturer or State participant. Instrument results will not be reported.
- Detailed Participant Instructions will be provided to each participant.

At the August 2013 Grain Analyzer Sector meeting, no report was provided on AOAC's efforts to conduct proficiency testing for grain moisture. As such, Mr. Karl Cunninghan (Illinois) and Mr. Kevin Hanson (Missouri) agreed to work together to conduct a grain moisture proficiency test. Mr. Cunningham agreed to provide the samples for proficiency testing and Mr. Hanson agreed to analyze the data in accordance with the procedures used to conduct proficiency testing in the State laboratory program. Mr. Hanson also agreed to collect data on test weight per bushel which may be useful in field test procedures for evaluating test weight per bushel on instruments. Following the August 2013 Sector meeting, arrangements were made for shipping grain samples to State participants.

At the August 2014 Grain Analyzer Sector meeting, Mr. Cunningham provided an update on the status of proficiency testing. Mr. Cunningham informed the Grain Analyzer Sector that he collected some wheat grain samples that can be used for grain moisture proficiency testing and that corn and soybeans will be collected during the 2014 harvest. Mr. Cunningham noted that after January 2015 wheat, corn and soybeans grain samples may be ready for distribution to the participating States. Mr. Cunningham agreed to analyze the data in cooperation with NIST and requested a list of contact information for participating States and other interested parties. Proficiency testing was conducted in 2015 and reported in the 2015 Grain Analyzer Sector Report (Note: In 2015, a Grain Analyzer Sector meeting was not held but a report of activities was generated.)

Although the Sector has periodically conducted proficiency testing over the years, a schedule of ongoing proficiency testing is needed to ensure that these tests are performed on a consistent basis. With changes in responsibilities in AOAC and loss connections, establishing an ongoing collaborative study with AOAC may be difficult to manage. As such the Grain Analyzer Sector is asked to consider the following timeline previously discussed for sending out samples and using the guidelines for proficiency testing which includes frequency of testing included in NISTIR 7082 "Proficiency Test Policy and Plan (For State Weights and Measures Laboratories), and tools and forms for analyzing the results which are located on the NIST OWM Website at **www.nist.gov/publications/nistir-7082-proficiency-test-policy-and-plan-state-weights-measures-laboratories-2018.**

This publication is available free of charge from: https://doi.org/10.6028/NIST.SP.1253

It is suggested that the proficiency testing be managed and oversite provided by State Weights and Measures, Grain Analyzer Sector members on a rotating basis. Per NISTIR 7082, the frequency of proficiency testing for grain moisture air oven measurements is 4 years or more often. As such the following scheduled is proposed for discussion. Please note that in addition to testing corn, soybeans and wheat the Sector is asked to consider any benefits to including one specialty grain such as corn modified for high ethanol production to the proficiency testing. The schedule will be reviewed at the Sector meeting preceding the scheduled proficiency test date to confirm responsible parties and any specialty grains for inclusion in the proficiency test year. The specialty grain will change based on specific market concerns during the proficiency test year.

Air Oven Grain Moisture Proficiency Testing Schedule (Previous PTs 1995, 2001, and 2015)					
PT TestDate4-yr. Cycle	**Sample CollectionDate**	**Samples for Testing 2 of each (corn, wheat, soybeans)**	**Sample ShipDate**	**Responsible for Sample Distribution w/ Instructions**	**Responsible for Data Collection and Analysis**
Spr 2019	Spr 2018	✓	Jan/Feb 2019	IL	IL
Spr 2023	Spr 2022	✓	Jan/Feb 2023	_____?	_____?
Spr 2027	Spr 2026	✓	Jan/Feb 2027	_____?	_____?

During the 2017 GA Sector meeting, the Sector agreed that there was no need to test specialty grain and that including these grains will not provide any useful information. The Sector decided that the three major grains, wheat, corn, and soybeans would be the grains included for proficiency testing. States and industry sector members participating in the proficiency testing were encouraged to provide their current contact information to Mr. Cunningham for sample distribution. The above table represent the schedule for proficiency testing, which was edited after the 2017 Sector meeting discussion of this item.

During the 2018 GA Sector Meeting, Mr. Cunningham report on the Grain Analyzer Sector's 2018 grain moisture proficiency testing activities. He noted that states are required to participate in proficiency testing and that any manufacturer may participate.

Conclusion: Mr. Cunningham stated that round robins/proficiency testing will begin shortly after January 1, 2019 and that samples of corn, wheat and soybeans will be sent to participants.

8. The Feasibility of a Phase II Program for Near Infrared Grain Analyzers

Source:
Dr. Hurburgh (Iowa State University)

Background/Discussion:
The GIPSA Grain Inspection Advisory Committee recommends that GIPSA initiate research to determine the feasibility of extending the theory of "equivalency" to multiple-constituent instruments to utilize standardized technology while maintaining accuracy and consistency in measurement of wheat protein.

Ms. Eigenmann (now a former member of the GA Sector) provided an update on the Grain Inspection Advisory Committee's Resolutions. Afterwhich, the Sector discuss the feasibility of an ongoing calibration program also referred to as a Phase II program for Near Infrared Grain Analyzers (NIR) instruments that measure wheat protein. The Phase II program for grain moisture is a program that monitors the moisture calibrations on grain moisture meters annually. As changes to the calibrations occur due to grains, climate, etc., data collected in this program allows for changes to moisture calibrations annually and ensure equivalency among the different moisture meter models. The

This publication is available free of charge from: https://doi.org/10.6028/NIST.SP.1253

Advisory committee is recommending that this program be extended to include NIR instruments that measure wheat protein. It was noted that there could be multiple NIR instruments for wheat protein introduced into the market and that it may be advisable to have the Phase II program extended to NIR instruments that measure wheat protein. It was also mentioned that currently there are few States that are checking wheat protein on multi-constituent instruments.

GIPSA currently has an annual review program for the official protein system but would have to consider the cost associated with extending the program for other NIR wheat protein analyzers. It was noted during the discussion that GIPSA currently has hourly rate fees set that could be applied to a phase II program for wheat protein..

Unlike moisture where there may be changes to the calibrations annually, there will not be year to year changes for wheat protein. As such, consideration may be given to conducting the program less than annually, and considering reviewing wheat protein calibrations every 3, 4, or 5 years, as appropriate. In addition, it was noted that there also has to be a mechanism to get manufacturers calibration data for calibration review.

The Sector discussed the feasibility of a phase II program for wheat protein giving consideration to the following issues:

- How the program will be funded,
- How often the calibrations for wheat protein will be updated,
- How many devices are currently being used in commercial transactions, and
- If being used commercially in a State, what is needed by States to begin testing these devices?

2014 Grain Analyzer Sector Report:
At the August 2014 Grain Analyzer Sector meeting, USDA, GIPSA representatives provided an update on the activities concerning a phase II program for wheat protein. The Sector was informed that USDA, GIPSA is discussing funding options for this program. It was noted that the frequency of calibration for wheat protein is being considered and that this will impact the cost of the program. The Sector was also informed that Dr. David Funk **(**Grain Quality Analytics, LLC) is writing a discussion paper that will address many of the issues concerning a Phase II program for wheat protein.

2015 Grain Analyzer Sector Report:
USDA, GIPSA representatives mentioned that they are not aware of a discussion paper from Mr. Funk concerning the feasibility of a Phase II program for Near Infrared Grain Analyzers. The Sector should continue to provide feedback on the four bullet items listed above and USDA, GIPSA should provide any updates on any internal discussions.

2016 Grain Analyzer Sector Meeting:

Mr Jordan (GIPSA, the NTEP Participating Laboratory for grain analyzers) provided information on some work involving applying data transforms to spectra of multiple instrument models and provided an update of these activities along with others involved in considering Phase II testing for Near Infrared Grain Analyzers.

During the 2016 Grain Analyzer Sector meeting, the Sector agreed that a program is needed based on observations and some feedback from sector members that review calibration data for these instruments. As such, the Sector "brain stormed" ideas on what would be needed to develop a Phase II program to periodically verify the calibrations on Near Infrared devices. The sector members generated the following information based on its discussion:

Near Infrared Phase II Program Needs:

- Set of robust samples that can be used every year,
- A reference laboratory to perform the testing,
- 100 samples for all meters or less per grain type on each meter,

This publication is available free of charge from: https://doi.org/10.6028/NIST.SP.1253

- The program should verify calibrations for basic grains where there is a commercially impact to included protein in wheat, soybeans, barley, and corn and oil in corn and soybeans. (It was noted during discussion that there is a large economic impact in the area of wheat protein and that protein and oil in corn and soybeans are used in many non-trade applications).
- The program would currently include a total number of three instruments. (There are three instruments that measure protein and oil in the NTEP program.)
- Testing should include a slope bias test for each 2 point intervals and include a confidence interval.
- The current NCWM, Inc. policies for participating in the grain moisture Phase II testing can be used for the near infrared Phase II program.
- An estimate of the cost of the program is needed. There was also a question as to whether or not the cost of the program would be distributed among the participating manufacturers, similar to the Phase II program for grain moisture.

In addition to the discussion of program needs for Phase II testing for near infrared devices, it was noted that although States test near infrared devices for grain moisture measurements, not many States are evaluating these devices for protein or other grain constituents (oil or starch). The GA Sector also discussed the needs of State weights and measures jurisdictions in testing near infrared devices for protein, starch and oil. It was noted that State resources, staff and money, are needed for testing and that currently, per the States that attended the Sector meeting, commercial transactions involving protein measurements are lower than for grain moisture measurements.

2017 Grain Analyzer Sector Meeting:
During the 2017 Grain Analyzer Sector meeting, the Sector discussed the cost of an ongoing calibration program (Phase II Testing) for near infrared grain analyzers. Dr. Charlie Hurburgh mentioned that he is aware of continuity problems with protein and oil calibrations. It was mentioned that funding the moisture Phase II testing is handled through the interagency agreement where NIST, GIPSA, and manufacturers contribute to funding the program. It was noted that the largest cost will be the labor in collecting the instrument data. It was reported that 50 samples are used in the official system for near infrared meters and a monitoring system is also in place for the official system that is similar to that of the Phase II program for moisture. Dr. Charlie Hurbugh agreed to develop a Near Infrared Phase II Testing program cost analysis and share it with Ms. Cathy Brenner, USDA, GIPSA. Ms. Cathy Brenner agreed to review the cost analysis and write a proposed program for a Phase II Near Infrared Testing Program. This information will be available for review at the 2018 Grain Analyzer Sector meeting.

For the 2018 Grain Analyzer Sector, FGIS prepared a cost estimate for an on-going calibration program for near infrared (NIR) grain analyzers which is based on collecting 50 samples per grain type for a total of 500 samples. The cost estimates are for the additional work above the cost FGIS incurs to maintain the official inspection system. For some of the grains, such as barley and corn, FGIS does not routinely select 50 samples per year for reference analysis due to the narrow constituent range and/or low volume of samples received for the FGIS NIR quality control program. Therefore, FGIS will need to select additional samples to achieve 50 per year that require refererence analysis. FGIS will share 50 % of the cost associated with preparing the additional samples for reference analysis and for the reference costs.

The estimate fees for an ongoing NIR calibration program are included in the table below. These fees are based on the FGIS Directive 9180.74 dated January 18, 2018 fee schedule of $83.90 hourly rate, $13 for reference moisture, $20 for reference oil, and $16 for reference protein.

The estimates are based on the current funding outlook for FGIS. Ms. Cathy Brenner reviewed the cost analysis with the GA sector, and Dr. Charlie Hurburgh noted that this is being driven by the market and that we should push forward on this effort.

This publication is available free of charge from: https://doi.org/10.6028/NIST.SP.1253

Total NIR Models (including official model) =TM	Number of NTEP only models =N	Total Program Cost =TP	Mfg's Cost Per Model =TP/TM
3	1	$ 6,137	$ 2,046
4	2	$ 12,274	$ 3,069
5	3	$ 18,411	$ 3,682
6	4	$ 24,548	$ 4,091
7	5	$ 30,686	$ 4,384
8	6	$ 36,823	$ 4,603
9	7	$ 42,960	$ 4,773
10	8	$ 49,097	$ 4,910

Conclusion:
The Sector was in agreement with establishing a Phase II ongoing calibration for NIR grain analyers. It was recognized that testing requirements and changes to Publication 14 are needed.

9. State Weights and Measures Issues with Inspection of Grain Moisture Meters for Corn - Tolerances for UGMA Meters

Source:
Ms. Diane Lee, NIST OWM, Legal Metrology Device Group

Background/Discussion:
Ms. Diane Lee (NIST OWM) received calls requesting a copy of the annual request for grain samples and list of grains that GIPSA request from States to include in the ongoing calibration program. These requests came from various States and other interested parties. One State reported seeing a difference between a UGMA meter and another meter on corn samples and wanted to ensure that grain samples in their State were represented in the ongoing calibration program.

2016 Grain Analyzer Sector Meeting
During the discussion of this item at the 2016 Grain Analyzer Sector meeting, it was mentioned that this issue was raised when two states would not accept the new corn calibrations for grain moisture meters when they observed a difference in results for corn on different meter technologies. During the discussion, it was noted that the States that reported problems with the corn calibrations were States that have high ethanol production. It was explained that States with high ethanol production may have a high production of modified corn (corn modified to increase ethanol production). Since calibrations are based on a national sample set with grains collected from across the U.S., these modified samples may not have been included in the national sample set which could have contributed to the irregularities with the updated corn calibrations. It was suggested during the Sector meeting that modified corn samples be included in the national sample set and to monitor corn calibrations and modified corns for ethanol production. It was also noted that States should use the recommended procedures in NIST HB 44 when testing to ensure that errors are not introduced due to incorrect test procedures.

Following the discussion of this agenda item, Mr. Jess McCluer (National Grain and Feed Association), who had submitted an item to include on the 2016 sector agenda that was ultimately not included on the agenda based on his request to change GIPSA tolerances, which is not in the scope of the GA Sector, presented information in reference to tolerance for UGMA meters. He explained that if the UGMA meter technology can make better measurements, he recommends that a reduction in the tolerances should be made. Mr. Charlie Hurburgh (Iowa State University)

noted that the Sector has not conducted a study of the new technology and that a task force could be developed to look at the results of these meters. Mr. Hurburgh agreed to chair the task group to look at results from UGMA meters.

After some discussion with Mr. Dave Funk (Grain Quality Analytics, LLC) and some research on the tolerances for UGMA meters, at the temperature extremes, errors in measurement are increased so the tolerances were set to account for an average error in these meters. As such, the task group should include a review of the measurements at varying temperature ranges.

2017 Grain Analyzer Sector Meeting
During discussion of this issue at the 2017 Grain Analyzer Sector meeting, it was suggested that different tolerances for this technology may be needed. Mr. Jim Truex (NTEP Administrator) mentioned that different tolerance for technology has been considered in the past for other devices. The Sector decided to form a task group to take a closer look at field tolerances associated with UGMA meters. Charlie Hurburgh agreed to chair the work group and the following State weights and measures GA Sector members agreed to participate on the work group:

- Mr. Karl Cunningham (Illinois)
- Randy Burns (Arkansas)
- Tom Hughes (Missouri)

It was noted that the task group may review previous inspection data for UGMA meters for wheat and corn samples.

2018 Grain Analyzer Sector Meeting
Dr. Charlie Hurburgh collected and analyzed data from Iowa State Weights and Measures Program to compare UGMA meters and 2MHz meters to assess a need for changes to the tolerances in NIST HB 44 Section 5.56(a) for the air-oven test method. During the 2018 meeting, Dr. Hurburgh reported that based on the data, UGMA meters read closer to the reference air oven moisture results than non-UGMA meters. (See data below) The Y-axis on the chart below represents the number of meters (UGMA and 2MHz meters) and shows that as of 2017 the number of UGMA meters exceed the number of 2MHz meters in Iowa. It was also noted during the 2018 Grain Analyzer Sector meeting that the current tolerances were developed in 1991 and have not changed with the change in technology for these devices; and is needed for grain industry risk management.

Iowa Moisture Meter Inspection Results				**2014-2017**	
			Average Result on Inspector Sample		
Year	**Tech**	**Number of**	**Corn 1**	**Corn 2**	**Soybean**
		Meters	**Meter-Std (% pts)**	**Meter-Std (% pts)**	**Meter-Std (% pts)**
2014	UGMA	440	-0.02	0.02	-0.01
2015	UGMA	531	0.04	-0.06	-0.02
2016	UGMA	654	0.05	-0.06	0.01
2017	UGMA	720	-0.18	-0.06	-0.05
	Avg		**-0.03**	**-0.04**	**-0.02**
2014	2MHz	679	-0.25	0.04	-0.07
2015	2MHz	595	-0.29	-0.38	0.02
2016	2MHz	483	-0.28	-0.42	0.04
2017	2MHz	445	-0.15	-0.35	-0.01
	Avg		**-0.24**	**-0.28**	**0.00**
Different samples each year for Corn 1, Corn 2, Soy					

This publication is available free of charge from: https://doi.org/10.6028/NIST.SP.1253

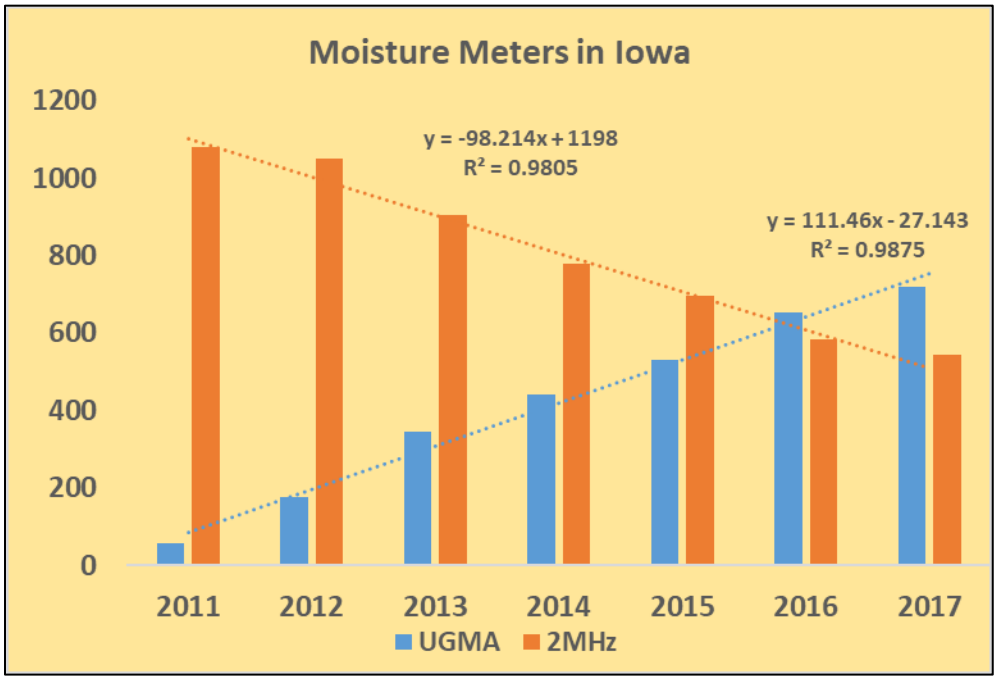

Conclusion: The Sector agreed to make changes to the tolerances for the air-oven reference method in NIST Handbook 44 Section 5.56(a) and following the review and discussion of the data, the NIST Technical Advisor, Ms. Diane Lee, developed the Form 15, Proposal to Amend Handbooks that included the proposed changes to NIST HB 44 that was agreed to by the Sector along with a table that provided specific tolerances per the proposed changes to NIST HB 44. The table of specific tolerances that will result from the proposed changes to the NIST HB 44 and the proposed changes to NIST HB 44 are included below:

Specific tolerances resulting from the proposed change to NIST HB 44 Section 5.56(a) tolerances for air-oven method field tolerances.		
Moisture (%)	**Tolerance (0.03% percent of the moisture content)**	**Minimum Tolerance (0.5% in moisture content)**
8	0.24	0.5
9	0.27	0.5
10	0.30	0.5
11	0.33	0.5
12	0.36	0.5
13	0.39	0.5
14	0.42	0.5
15	0.45	0.5
16	0.48	0.5
17	0.51	0.5
18	0.54	0.5
19	0.57	0.6
20	0.60	0.6

This publication is available free of charge from: https://doi.org/10.6028/NIST.SP.1253

21	0.63	0.6
22	0.66	0.7

Proposed changes to NIST HB 44 Section 5.56(a) Air-Oven Reference Method Tolerances

T.2.Tolerances.

T.2.1.Air Oven Reference Method. – Maintenance and acceptance tolerances shall be as shown in Table T.2.1. Acceptance and Maintenance Tolerances Air Oven Reference Method. Tolerances are expressed as a fraction of the percent moisture content of the official grain sample, together with a minimum tolerance.
(Amended 2001)

Table T.2.1.
Acceptance and Maintenance Tolerances Air Oven Reference Method for All Grains and Oil Seeds

~~Type of Grain, Class, or Seed~~	Tolerance	Minimum Tolerance
~~Corn, oats, rice, sorghum, sunflower~~ ~~All other cereal grains and oil seeds~~	0.~~05~~03 of the percent moisture content ~~0.04 of the percent moisture content~~	0.~~8~~5 % in moisture content ~~0.7 % in moisture content~~

(Amended 2001 **and 20XX**)

10. State Weights and Measures Issues with Inspection of Grain Moisture Meters for Corn - Tolerances for UGMA Meters

Source:
Grain Analyzer Sector

Background/Discussion:
Following the discussion of the Items included on the 2017 Grain Analyzer Sector's 2017 Agenda, the GA Sector members were asked if there were any additional topics for discussion. A discussion on Meter to like-type meter testing and the definition of a like-type meter followed. During the discussion test procedures for meter to like-type meter testing were requested. It was noted that there may be only about two states using this type of test method and that it may be due to the cost of obtaining like-type meters to perform the test. A question was raised as to what is considered a like-type meter and it was explained that like-type meant that the make and model were the same. Suggestions were made to include a definition for like-type in NIST HB 44 and to consider documenting test procedures for meter to like-type meter testing.

During the 2018 grain analyzer sector meeting, the sector discussed industry and State weights and measures programs that used meter to like-type meter testing and master meter test methods. Kansas reported that reference meters are used to collect moisture results on samples. The samples are then taken to the field to compare to commercial field moisture meters. It was also reported that most State weights and Measures that use a meter to meter test method for testing field meters do not use a meter to like-type meter testing program which is specified in NIST HB44. The Perten representative reported that Perten uses three layers of mater meters when calibrating their devices.

This publication is available free of charge from: https://doi.org/10.6028/NIST.SP.1253

This publication is available free of charge from: https://doi.org/10.6028/NIST.SP.1253

Conclusion:
It was noted that an analysis of the failure rate for meter to meter test methods should be investigated and an analysis of all the issues for meter to meter test methods is needed along with test methods for this type of field testing.

11. 2020 – 2024 Interagency Agreement to Fund the GMM Ongoing Calibration (Phase II) Program

Source:
Ms. Cathy Brenner (USDA, GIPSA)
Ms. Diane Lee (NIST, OWM)

Background/Discussion: The current 2015-2019 Interagency Agreement is the fifth 5-year agreement of the on-going calibration program. The current agreement was signed in July 2015 and runs through analysis of the 2018 crop and issuance of the 2019 Certificates of Conformance. The 2019 certificates mark the final year of the current agreement. It should be noted that annual calibration activities occur in two government fiscal years and are better defined by a starting date of July 1.

During the 2018 Grain Analyzer Sector meeting, Ms. Cathy Brenner reviewed a cost estimate for the Phase II, Ongoing Calibration Program that was prepared by FGIS (See cost estimates below). The cost estimate is based on collecting a total of 740 samples for the 15 NTEP grains and assumes that NIST and FGIS are able to provide funding upto $30,000 to subsidize the program. In response to the review Mr. Andy Gell (Foss North America) noted that the cost are similar to the current ongoing calibration program for grain moisture meters. The proposed cost analysis table is provided below:

Total NIR Models (including official model) = TM	Number of NTEP only models = N	Total Program Cost = TP	Funding From NIST =TP/3	Funding from FGIS =TP/3	Funding from Manufacturers = TP-NIST-FGIS	Cost per model
3	1	$ 12,362	$ 4,121	$ 4,121	$ 4,120	$ 1,373
4	2	$ 24,724	$ 8,241	$ 8,241	$ 8,242	$ 2,061
5	3	$ 37,086	$ 12,362	$ 12,362	$ 12,362	$ 2,472
6	4	$ 49,448	$ 16,483	$ 16,483	$ 16,482	$ 2,747
7	5	$ 61,810	$ 20,603	$ 20,603	$ 20,604	$ 2,943
8	6	$ 74,172	$ 24,724	$ 24,724	$ 24,724	$ 3,091
9	7	$ 86,534	$ 28,845	$ 28,845	$ 28,844	$ 3,205
10	8	$ 98,896	$ 30,000	$ 30,000	$ 38,896	$ 3,890

12. Next Sector Meeting

The next meeting is confirmed for Tuesday, August 13, 2019 (8:00 am to 5:00 pm) at the Hyatt Place at the Kansas City, Missouri Airport.

If you would like to submit an agenda item for the 2019 meeting, please contact any of the following persons by June 1, 2019:

Mr. Jim Truex (NTEP Administrator) at **jim.truex@ncwm.com**
Ms. Diane Lee, NIST Technical Advisor, at **diane.lee@nist.gov**

This publication is available free of charge from: https://doi.org/10.6028/NIST.SP.1253

THIS PAGE INTENTIONALLY LEFT BLANK

This publication is available free of charge from: https://doi.org/10.6028/NIST.SP.1253

Appendix D

National Type Evaluation Program (NTEP)
Measuring Sector

Annual Meeting

September 25-26, 2018 Baltimore, MD

Meeting Summary

Glossary of Acronyms

CC	Certificate of Conformance	NTETC	National Type Evaluation Technical Committee
DMS	Division of Measurement Standards	OIML	International Organization of Legal Metrology
ECR	Electronic Cash Register	OWM	Office of Weights and Measures (NIST)
EVFS	Electric Vehicle Fueling Systems	PD	Positive Displacement
HB 44	NIST Handbook 44 "Specifications, Tolerances, and Other Technical Requirements for Weighing and Measuring Devices"	Pub 14	NCWM Publication 14
LMD	Liquid Measuring Devices	RMFD	Retail Motor-Fuel Dispenser
mA	milliamp	SI	International System of Units
MFM	Mass Flow Meters	S&T	Specifications and Tolerances
NCWM	National Conference on Weights and Measures	TG	Task Group
NIST	National Institute of Standards and Technology	VTM	Vehicle Tank Meter
NTEP	National Type Evaluation Program	W&M	Weights and Measures

This publication is available free of charge from: https://doi.org/10.6028/NIST.SP.1253

This publication is available free of charge from: https://doi.org/10.6028/NIST.SP.1253

This glossary is meant to assist the reader in the identification of acronyms used in this agenda and does not imply that these terms are used solely to identify these organizations or technical topics.

NTEP Measuring Sector Chairman, Mr. Michael Keilty (Endress+Hauser Flowtec) opened the meeting, providing an overview of the purpose of the Sector; introducing the agenda; and identifying the voting members of the Sector according to NCWM records. A copy of the final attendance list is included in Appendix I to this summary.

Carry-over Items:

1. Laboratory and Field Evaluation – Clarification of Language

Source:
NTEP Laboratories

Background Information:
The NTEP evaluators have experienced confusion when interpreting the "Laboratory or Field Evaluation" section of the LMD checklist (see Page LMD-111). At its 2018 meeting, the Sector reviewed proposed changes from the NTEP laboratories to clarify the information in this section. The Sector agreed there are multiple points in this section that are confusing. Sector Technical Advisor Mrs. Tina Butcher (NIST OWM) noted that the original section was intended to cover multiple applications. Over time, permanence test criteria were changed or deleted for certain device types and there appears to be residual language that needs to be moved or deleted. NTEP Director, Mr. Jim Truex noted that there have been arguments from manufacturers over the requirements for permanence testing and modifying the language as proposed is intended to help eliminate these instances.

After discussing the proposed changes at length, the Sector agreed that the proposed changes from the laboratories will help with some of the confusion, but more work is needed. The Sector agreed that additional clarifications to the first part of this section would be helpful; this will be a carryover item for next year. Mrs. Butcher agreed to rework the section based on the Sector's discussions and past decisions and circulate those proposed revisions to the labs, Rich Miller, and Dmitri Karimov and bring it back next year for the Sector to review.

Recommendation:
The Sector will be asked to review proposed changes to the "Laboratory or Field Evaluation" section of the LMD checklist to be distributed prior to the Sector Meeting.

Discussion:
Sector Chairman Michael Keilty (Endress + Hauser Flowtec) reviewed this issue, providing background information from last year's Sector discussion, noting that the Sector had sought to modify the "Laboratory or Field Evaluation" section of the Field Evaluation and Permanence Tests Portion of the Liquid-Measuring Devices Checklist as described in the "Background" above. Sector Technical Advisor Tina Butcher presented the following proposed revision of this section based on discussions amongst the NTEP Measuring Laboratories during their meeting just prior to the Sector meeting.

Laboratory or Field Evaluation

A. <u>Use of Simulated Inputs:</u>

<u>As per NTEP Technical Policy U. Evaluating Electronic Indicators Submitted Separate from a Measuring Element,</u> ~~W~~ when evaluating electronic indicators submitted separate from a measuring element, simulated inputs (e.g. meter pulse, temperature, pressure, density, communications, etc.) may be used as

This publication is available free of charge from: https://doi.org/10.6028/NIST.SP.1253

follows:

- For the initial testing of the indicator **for stationary applications**.
- For software changes to a device with an existing CC.
- **This provision does not apply to vehicle-tank metering systems**.

B. Field and Permanence Testing for Components Subject to Evaluation:

Field Evaluation and Permanence Testing – General:

Measuring systems, devices, and elements whose performance may change with use over time are generally subject to field evaluation and permanence tests.

~~**The following types of devices and elements are subject to initial field or laboratory evaluation:**~~

- ~~**Electronic Indicating Elements**~~
- ~~**Consoles**~~
- ~~**Recording Elements**~~
- ~~**Electronic Cash Registers**~~
- ~~**Data Processing Units**~~

Permanence testing consists of conducting an initial test followed by a subsequent test. The subsequent test will be conducted not sooner than 20 days following the initial test. During this period, the device must be used for at least 300 deliveries and achieve any required throughput.

~~**Field examination is conducted between 20 and before 30 days of use in a normal installation.**~~ During ~~**this**~~ **the permanence period**~~**interval**~~, the device must perform and function correctly and not be serviced. Permanence tests are conducted on equipment such as a complete measuring system or only a measuring element (meter.)

Mobile Applications:

- **A permanence test is required for all mobile devices.**
- **When updating a CC for a mobile device for changes in hardware, a permanence test is required.**
- **When updating a CC for mobile electronic devices for changes in software, a permanence test may be waived by NTEP.**

Stationary Applications:

~~**The**~~ **A** permanence test is not required in either new evaluations or when updating a CC for the **following** *electronic* devices**:**

- **Electronic Indicating Elements**
- **Consoles**
- **Recording Elements**
- **Electronic Cash Registers (e.g., Point-of-Sale Systems)**

- **Data Processing Units**

~~**listed above in stationary installations. The permanence test for mobile electronic devices may be waived by NTEP for updating a CC.**~~

Key points raised during the Sector's discussion of this proposal were as follows.

- The proposed restriction for using simulated inputs only as described in proposed part A is inappropriate. It should be permissible to use simulated inputs to verify an indicator in a lab environment prior to other testing.
- There is no value to testing electronics over a period of time. They either work or they don't, and this will be evident during the initial evaluation.
- Focus needs to be on measurement capability. If electronics fail, this is a warranty issue.
- Permanence testing, including field testing, is necessary to verify appropriateness of systems and components used in mobile applications (e.g., vehicle-mounted).
- Durability testing to simulate "road use" might be considered; however, standards would need to be set. For example, the duration and strength of vibrations or other influences.
- A third-party laboratory might be considered for some testing if witnessed by an NTEP evaluator.
- The proposed minimum number of 300 deliveries was questioned. The labs proposed this threshold as a starting point based upon requirements used for NTEP evaluations of other devices. The labs viewed this as a starting point for discussion, noting that some limits need to be established to avoid a company placing a device in an installation that gets little or no use during the permanence period. Other device types such as scales have similar criteria for permanence testing, and belt conveyor scales even require a six-month permanence period.
- For meter testing, throughput quantity is often achieved at a manufacturer's facility in a compressed period of time. There was opposition to including any language that would eliminate this option for achieving throughput quantity.
- Defining "normal use" is a challenge. Specifying time and number of uses is a way to establish some minimum criteria for "normal use". More work and discussion are needed to establish an appropriate combination of time and degree of use.

The Sector reworked the proposed modifications from the laboratories several times without reaching agreement.

Decision:
The Sector concluded that additional work is needed to develop proposed revisions to the Laboratory or Field Evaluation section of the "Field and Permanence Tests for Metering Systems" found on page LMD-111 of the NCWM Publication 14 Liquid-Measuring Devices Checklist. The following individuals volunteered to work together to develop proposed revisions to be circulated to the Sector for review and decision, possibly resolving the proposal via email balloting. Sector Technical Advisor Tina Butcher will lead the effort and ensure that the work is completed.

- **Mrs. Tina Butcher (NIST OWM, NTEP Measuring Sector Technical Advisor) – Lead**
- **Mr. Craig Cavanaugh (Tuthill Transfer Systems)**
- **Mr. Dmitri Karimov (IDEX Corporation, Liquid Controls)**
- **Mr. Rich Miller (Technip MC)**
- **Mr. Randy Ramsey/Hunter Hair (NC NTEP Lab)**
- **Mr. John Roach (California NTEP Lab)**

This publication is available free of charge from: https://doi.org/10.6028/NIST.SP.1253

This publication is available free of charge from: https://doi.org/10.6028/NIST.SP.1253

2. Diesel Exhaust Fluid (DEF) - Testing Criteria to Include DEF on an NTEP CC

Source:
NTEP Laboratories

Background Information:
NTEP evaluators are routinely asked what testing is necessary to cover DEF on NTEP certificates. Another common question is what testing is necessary to get a family of meters certified for DEF and what other products will be included.

The current policy has been questioned at times by applicants. For example, a client stated that DEF is 67% water and 32% Urea. Mag Flow conductance for Urea is 5000 micro siemens/centimeter and that for water is 725 (see page LMD-7 in Pub 14 for both products). Plus, they are in different families.

NTEP tested the product with DEF. NTEP concluded that each family (water and fertilizer) should be tested to establish conductivity. Our thoughts were that we would simply give the product DEF (the product actually tested) on the CC since we are not really establishing conductivity for the family table for either water or fertilizer. In this case, after discussion, NTEP let the client know that they had a couple of choices.

1. Test only DEF and only get DEF with no conductance range
2. Test water and Urea which would establish conductivity for both water and fertilizer families.

Prior to the 2017 Sector Meeting, DEF was and had been considered fertilizer due to the Urea content. DEF is prevalent enough now to justify its own category listing. The Sector considered a recommendation to establish a separate product category for diesel exhaust fluid (DEF).

NTEP Director, Mr. Jim Truex introduced the item on behalf of the NTEP Laboratories, noting the proposal arose from discussions among the laboratories who need more specific criteria to address DEF. He clarified that the criteria are intended to apply to all meter types. Some Sector members asked if the proposed change, if adopted, would affect the status of current NTEP Certificates of Conformance (CCs) and Mr. Truex noted that NTEP would not require companies to resubmit CCs for evaluation. Some questioned whether not having the reference on a current CC might not create a disadvantage compared with companies getting new CCs with the listing on the CC.

Mr. Truex noted that DEF is becoming prevalent enough that people want this to be specifically listed on their CCs and giving DEF its own category night help answer some of the questions and clear up some current confusion. The Sector acknowledged that the Family of Products Table does not provide an exhaustive listing of specific products; these are just examples of products and their characteristics that might be measured with a given meter type and a classification of how they would be treated regarding NTEP testing.

There was some additional discussion about the nature of DEF and some commented on the fact that there can be different percentages of water used in the mixture. The Sector spent some time discussing possible ranges to list in the table. The Sector finally agreed that more research is needed and concluded that this task would be better completed outside of the meeting.

The group discussed this item at length, including proposed parameters for DEF and Urea. The proposed changes are more complex than can be resolved at the meeting and the Sector wants to see a final, marked-up draft of the changes to the Product Family Table before making a decision.

Mr. Keilty agreed to lead a small group of volunteers consisting of the following to work on this item:

- Mr. Michael Keilty (Endress + Hauser)
- Mr. Rich Miller (FMC)
- Mr. Craig Cavanaugh (Tuthill Transfer System)

- Mr. Robin Parsons (Parafour Innovations)

The group was to develop and circulate a proposal to the remainder of the Sector in a ballot to add DEF as a separate line item for each meter type in the Product Family Table. In addition, the group was to further review the listings for Urea to ensure the references are accurate.

Recommendation:
No action is asked of the Sector on this item. This item is included on the Sector's agenda to report on the actions taken following the last Sector meeting.

- The group assigned to this task completed its work. Sector Chairman Michael Keilty balloted the Sector initially in ballot 17-01 and in a subsequent ballot 17-02. Sector reached a consensus on the changes proposed and Mr. Keilty summarized the results of the ballot in an email to the Sector dated November 21, 2017. The results are repeated below for reference. The changes adopted are shown in Appendix A to this Agenda.

Summary of Ballot Results			
Ballot 17-01		**Ballot 17-02**	
(Prior to change recommended by D. Karimov)			
3 yes		*9 yes*	
2 no		*0 no*	
1 abstain		*0 abstain*	
(After recommended change by D. Karimov)			
4 yes – with the changes and no others			
Summary Totals:	**7 yes; 2 no; 1 abstain**	**Summary Totals:**	**9 yes; 0 no; 0 abstain**
Public Members:	**2 yes; 1 no**	**Public Members:**	**3 yes; 0 no**
Private Members:	**5 yes; 1 no; 1 abstain**	**Private Members:**	**6 yes; 0 no**

Discussion:
Mr. Keilty reviewed this issue, providing background information from last year's Sector meeting and noting the work by the small task group and the subsequent ballot and decision made by the Sector in fall 2017. Michael touched on the following in his review:

- There was some confusion during the balloting process regarding changes to the proposal under review. However, this was resolved after some communications by the Chairman.
- The small task group discussed: specifying a range of characteristics for DEF (as is done for other products in the current Families of Products Table); establishing conductivity values; and how to identify key characteristics.
- Members of the group widely researched DEF to determine its range of parameters. Data was difficult to find.
- Finding data on conductivity was particularly difficult. DEF is a water-based solution, with slightly varying proportions and different sources of water (which can have its own range of conductivity). This possibly contributes to the variability of conductance among different samples of DEF.
- A suggestion was made that companies submitting devices for type evaluation to demonstrate conductivity of the liquid to the NTEP labs.

There was a small amount of discussion on this item. Points raised included:

- Mr. Robin Parsons (Parafour Innovations) observed that standards are tightening as DEF use increases. This may lead to better data in the next few years.

This publication is available free of charge from: https://doi.org/10.6028/NIST.SP.1253

This publication is available free of charge from: https://doi.org/10.6028/NIST.SP.1253

- Some questioned whether the laboratories should ask for documentation from companies during type evaluation. Data would need to be corrected to a reference temperature since other values in the Families of Products Table are corrected to 60 °F.

Decision:
No decision was asked of the Sector on this item. This item is included on the Sector's agenda to report on the actions taken following the last Sector meeting and to allow for any remaining questions about the issue and/or the Sector's decision. One NTEP lab reported listing the conductivity values stated in Pub 14 on the NTEP CC resulting from an evaluation. A suggestion was made for any NTEP Laboratory conducting an evaluation of DEF measuring system to request data on the conductivity of the specific DEF used in the evaluation; however, no decision was made in this regard. To the extent possible, the NTEP Laboratory should document as much information as is available about the product used in the evaluation in the "Test Conditions" on the NTEP CC.

New Items:

3. Recommendations to Update NCWM Pub 14 to Reflect Changes to NIST HB 44 and Other Proposed Changes.

Source:
NCWM S&T Committee

Background:
At its 103rd Annual Meeting, the National Conference on Weights and Measures (NCWM) adopted the following items that will be reflected in the 2019 Edition of NIST Handbook 44. These items were included on the Sector's agenda to inform the Measuring Sector of the NCWM actions and to recommend corresponding changes to NCWM Publication 14. For additional details on these items, refer to the NCWM S&T Committee's 2018 Interim Report and its accompanying appendix along with the addendum sheets issued by the S&T Committee during the 2018 NCWM Annual Meeting.

A. Vehicle-Tank Meters Code - Manifold Flush Systems - Paragraph S.3.1. Diversion of Measured Liquid

Background:
At the 2018 NCWM Annual Meeting, the NCWM adopted the following changes to the Vehicle-Tanks Meters Code to specify requirements for "manifold flush systems" used to flush product on metering systems with multiple compartments delivering multiple products through a single discharge hose. For reference, see Block 1 on the 2018 S&T Committee's Agenda, which includes GEN-1 and VTM-1.

Modify paragraph S.3.1. as follows:

S.3.1. Diversion of Measured Liquid. – ~~**Except on equipment used exclusively for fueling aircraft, n**~~**N**o means shall be provided by which any measured liquid can be diverted from the measuring chamber of the meter or the discharge line thereof. However, two or more delivery outlets may be installed if means are provided to ~~**insure**~~ **ensure** that:

(a) liquid can flow from only one such outlet at one time; and

(b) the direction of flow for which the mechanism may be set at any time is definitely and conspicuously indicated.

This publication is available free of charge from: https://doi.org/10.6028/NIST.SP.1253

This paragraph does not apply to the following:

1) **Equipment used exclusively for fueling aircraft.**

2) **Multiple-product, single discharge hose metering systems that are equipped with systems designed to flush the discharge hose, provided the flushing system complies with the provisions of paragraph S.3.1.1.**

Add a new paragraph S.3.1.1. as follows:

S.3.1.1. Means for Clearing the Discharge Hose. Metering systems may be equipped with systems specifically designed to facilitate clearing of the discharge hose prior to delivery to avoid product contamination. In such systems, a valve to temporarily divert product from the measuring chamber of the meter to a storage tank, shall be installed only if:

(a) The discharge hose remains of the wet hose type; and

(b) the valve and associated piping are approved by the weights and measures authority having jurisdiction over the device prior to commercial use; and

(c) the valve is permanently marked with its purpose (e.g., flush valve); and

(d) the valve is installed in a conspicuous manner and as far from the hose reel as practical; and

(e) the system clearly and automatically indicates the direction of product flow during operation of the flush system; and

(f) clear means, such as an indicator light or audible alarm, is used to identify when the valve is in use; and

(g) no hoses or piping are connected to the inlet when it is not in use.

(Added 20XX)

Add a new paragraph heading UR.2.6. Clearing the Discharge Hose and new paragraph UR.2.6.1. Records as follows:

UR.2.6. Clearing the Discharge Hose

UR.2.6.1. Records. Whenever, prior to delivery, a different product is pumped through the discharge hose to avoid contamination, a record including the date, time, original product, new product and gallons pumped shall be maintained. These records shall be kept and available for inspection by weights and measures for a period of 12 months

(Added 20XX)

Recommendation:
The Sector is asked to consider recommending modifications to NCWM Publication 14 to correspond with the changes to NIST Handbook 44 relative to "manifold flush systems" that were adopted by the NCWM in July 2018. Proposed changes are outlined in Appendix B to this Agenda.

This publication is available free of charge from: https://doi.org/10.6028/NIST.SP.1253

Discussion:
Sector Chairman Michael Keilty reviewed this item, noting the content of the referenced requirements have already been adopted by the NCWM. There were no substantive comments on this item other than discussion about the purpose of the requirement.

Decision:
The Sector reviewed the changes made by the NCWM to specify requirements for "manifold flush systems" as shown in the "Background" section of this agenda item; the Sector also acknowledged a related item on the NCWM S&T Committee's 2019 Agenda. The Sector reviewed the changes proposed to NCWM Publication 14 to reflect these Handbook changes as outlined in Appendix B to this summary and agreed to recommend these changes be adopted as shown.

B. Vapor Elimination – Multiple Measuring Codes

Background:
At the 2018 NCWM Annual Meeting, the NCWM adopted the following changes to the LPG & Anhydrous Ammonia Liquid-Measuring Devices Code; Cryogenic Liquid-Measuring Devices Code; and Carbon Dioxide Liquid-Measuring Devices Code to align requirements for air/vapor elimination. For reference, see the block of items under S&T Block 6, including LPG-1, CLM-3, and CDL-3.

LPG & Anhydrous Ammonia LMD Code:

S.2.1. Air/Vapor Elimination. - A ~~device~~ **measuring system** shall be equipped with an effective **air/vapor eliminator or other** automatic means to prevent the passage of **air/**vapor through the meter. Vent lines from the **air/**vapor eliminator shall be made of appropriate non-collapsible material.
(Amended 2016 **and 2018**)

Cryogenic Liquid-Measuring Devices Code:

S.2.1. Vapor Elimination. – A measuring system shall be equipped with an effective **air/**vapor eliminator or other ~~effective~~ **automatic** means to prevent the ~~measurement of vapor that will cause errors in excess of the applicable tolerances~~ **passage of air/vapor through the meter. Vent lines from the air/vapor eliminator shall be made of appropriate non-collapsible material.** (Also see Section T. Tolerances.)
(Amended 2018)

Carbon Dioxide Liquid-Measuring Devices Code:

S.2.1. Air/Vapor Elimination.

~~(a)~~ A ~~device~~ **measuring system** shall be equipped with an effective **air/vapor eliminator or other** automatic means to prevent the passage of **air/**vapor through the meter.

~~(b)~~ Vent lines from the **air/**vapor eliminator shall be made of appropriate non-collapsible material.
(Amended 2016 **and 2018**)

Recommendation:
The Sector is asked to recommending modifications to NCWM Publication 14 to reflect the changes to the three HB44 codes described in the "Background" section above. Proposed changes are outlined in Appendix C to this Agenda.

Discussion:
Sector Chairman Michael Keilty reviewed this item, noting the content of the referenced requirements have already been adopted by the NCWM. There were no extensive comments on this item other than discussion

This publication is available free of charge from: https://doi.org/10.6028/NIST.SP.1253

about the purpose of the requirements, which were noted as changes made to align these requirements with other Handbook 44 measuring codes. There was an observation from one Sector member that there is no "air" in propane; the Technical Advisor noted the S&T Committee acknowledged this in discussions several years ago and chose to use the "air/vapor" term so that there could be consistency in language among the various H44 metering codes.

Decision:
The Sector reviewed the changes made by the NCWM to align requirements for air/vapor elimination among the various measuring devices codes as shown in the "Background" section of this agenda item. The Sector reviewed the changes proposed to NCWM Publication 14 to reflect these Handbook changes as outlined in Appendix C to this summary and agreed to recommend these changes be adopted as shown. The Sector Technical Advisor Tina Butcher notes a minor editorial change was made to page 3, item 8.3 of that appendix; the text should be underlined. This correction has been made in the version of Appendix C attached to this summary.

C. Recorded Representations – 2018 S&T Item LMD-2: S.1.6.7. Recorded Representations; S.1.6.8. Recorded Representations for Transactions Where a Post-Delivery Discount(s) is Provided; and UR.3.4. Printed Ticket.

Background:
At the 2018 NCWM Annual Meeting, the NCWM adopted the following changes to the Liquid-Measuring Devices Code to specify requirements for including information to identify the dispenser used in a transaction on recorded representations issued by retail motor-fuel dispensing systems. For reference, see Item LMD-2 on the S&T Committee's Agenda.

S.1.6.7. Recorded Representations. – *Except for fleet sales and other price contract sales and for transactions where a post-delivery discount is provided, a printed receipt providing the following information shall be available through a built-in or separate recording element for all transactions conducted with point-of-sale systems or devices activated by debit cards, credit cards, and/or cash:*

(a) the total volume of the delivery; *******

(b) the unit price; *******

(c) the total computed price; ****~~and~~***

(d) the product identity by name, symbol, abbreviation, or code number. **** and***

(e) the dispenser designation by either an alpha or numerical description. **
*******[Nonretroactive as of January 1, 1986]* *****[Nonretroactive as of January 1, 2021***
(Added 1985) (Amended 1997, 2012, ~~and~~ 2014 **and 2018**)

S.1.6.8. Recorded Representations for Transactions Where a Post-Delivery Discount(s) is Provided. – Except for fleet sales and other price contract sales, a printed receipt providing the following information shall be available through a built-in or separate recording element that is part of the system for transactions involving a post-delivery discount:

(a) the product identity by name, symbol, abbreviation, or code number;

(b) transaction information as shown on the dispenser at the end of the delivery and prior to any post-delivery discount(s), including the:

This publication is available free of charge from: https://doi.org/10.6028/NIST.SP.1253

(1) total volume of the delivery;

(2) unit price; and

(3) total computed price of the fuel sale.

(c) an itemization of the post-delivery discounts to the unit price; ~~and~~

(d) the final total price of the fuel sale after all post-delivery discounts are applied~~.~~**, and**

(e) The dispenser designation by either an alpha or numeric description.

(Added 2012) (Amended 2014**and 2018**) [***Nonretroactive as of January 1, 2021]***

UR.3.4. Printed Ticket. - The total price, the total volume of the delivery, ~~and~~ the price per liter or gallon, ***and a corresponding alpha or numeric dispenser designation**** shall be shown, either printed by the device or in clear hand script, on any printed ticket issued by a device and containing any one of these values.
(Amended 2001 **and 2019**) ***(Nonretroactive as of January 1, 2021)**

Recommendation:
The Sector is asked to recommending modifications to NCWM Publication 14 to reflect the changes to the Liquid-Measuring Devices Code in NIST Handbook 44 relative to including information to identify the dispenser used in a transaction on recorded representations issued by retail motor-fuel dispensers. Proposed changes are outlined in Appendix D to this Agenda.

Discussion:

Sector Chairman Michael Keilty reviewed this item, noting the content of the referenced requirements have already been adopted by the NCWM. There was lengthy discussion regarding the fact that dispensers currently in use may or may not issue receipts with the identity information. Discussion points included the following:

- The Sector discussed the purpose of the requirements.
- The Sector also discussed a proposal under consideration for the 2019 NCWM cycle to add a nonretroactive exemption for establishments with a single dispenser having multiple meters or not more than one individual dispenser with a single meter for each product delivered. A question was raised about the purpose of the exception in paragraph UR.3.4. Printed Ticket as it applies to a single multi-product dispenser. Such a device often has two sides, which means that not including the dispenser designation on receipts issued by such a device will not clearly indicate the hose and meter used by a customer.
- It was suggested a better approach would have been to make the exception applicable only to single-hose, single-meter dispensers.
- The requirement should be related to the hose, not the meter.
- For retail motor-fuel dispensers (RMFDs) interfaced with point-of-sale (POS) systems, this information is controlled by the POS system software, not the RMFD. Thus, a specific model of RMFD at one station might print out the correct information, but the same model of RMFD may not print out the correct information at another station. It is dependent on the programming of the POS system, not the RMFD design or functionality. The NTEP Director clarified these requirements apply to card-activated RMFDs, not just those interfaced with POS systems.

Decision:
The Sector reviewed the changes made by the NCWM to include nonretroactive requirements for point-of-sale and card-activated retail motor-fuel systems as shown in the "Background" section of this agenda item. The Sector reviewed the changes proposed to NCWM Publication 14 to reflect these Handbook changes as outlined in Appendix D to this summary and agreed to recommend these changes be adopted as shown. During the meeting Sector Technical Advisor Tina Butcher noted an error in the referenced page number of the "Checklist and Test Procedures for Card-Activated Retail Motor-Fuel Dispensers" on page 5 of the version of Appendix D that accompanied the agenda. The page number should be ECRD-6, not LMD-84. This has been corrected in the version of the Appendix D attached to this summary.

D. WTR- Water Meters – Paragraph S.2.1. Provision for Sealing

Background:
At the 2018 NCWM Annual Meeting, the NCWM adopted the following changes to the Water Meters Code to add specific criteria for sealing water meters and to align the sealing requirements with that of other measuring device codes in HB44. For reference, see S&T Item WTR-2.

This publication is available free of charge from: https://doi.org/10.6028/NIST.SP.1253

This publication is available free of charge from: https://doi.org/10.6028/NIST.SP.1253

Table S.2.1. Categories of Device and Methods of Sealing	
Categories of Device	***Methods of Sealing***
Category 1: No remote configuration capability.	***Seal by physical seal or two event counters: one for calibration parameters and one for configuration parameters.***
Category 2: Remote configuration capability, but access is controlled by physical hardware. ***The device shall clearly indicate that it is in the remote configuration mode and record such message if capable of printing in this mode or shall not operate while in this mode.***	***The hardware enabling access for remote communication must be on-site. The hardware must be sealed using a physical seal or an event counter for calibration parameters and an event counter for configuration parameters. The event counters may be located either at the individual measuring device or at the system controller; however, an adequate number of counters must be provided to monitor the calibration and configuration parameters of the individual devices at a location. If the counters are located in the system controller rather than at the individual device, means must be provided to generate a hard copy of the information through an on-site device.***
Category 3: Remote configuration capability access may be unlimited or controlled through a software switch (e.g., password). ***The device shall clearly indicate that it is in the remote configuration mode and record such message if capable of printing in this mode or shall not operate while in this mode.***	***An event logger is required in the device; it must include an event counter (000 to 999), the parameter ID, the date and time of the change, and the new value of the parameter. A printed copy of the information must be available on demand through the device or through another on-site device. The information may also be available electronically. The event logger shall have a capacity to retain records equal to 10 times the number of sealable parameters in the device, but not more than 1000 records are required. (Note: Does not require 1000 changes to be stored for each parameter.)***

[Nonretroactive as of January 1, 2019]

(Table Added 2018)

Recommendation:
The Sector is asked to consider recommending modifications to NCWM Publication 14 to reflect the changes to the Water Meters Code described in the "Background" section above. Proposed changes are outlined in Appendix E to this Agenda.

Discussion:
Sector Chairman Michael Keilty reviewed this item, noting the content of the referenced requirements have already been adopted by the NCWM. Discussion points included the following:

- This table will help align requirements for sealing water meters with those in other measuring codes.
- This table will provide water meter manufacturers with specific criteria that recognizes the use of audit trails.
- The Sector should consider proposing a modification to the statement under checklist item 4.3.1.2. to clarify that the audit trails should be tracking evidence of the changes, not preventing changes.

This publication is available free of charge from: https://doi.org/10.6028/NIST.SP.1253

Adding the phrase "without evidence of the change" or similar language should be considered and discussed as a future proposal for the Water Meters Code and other Measuring Codes; an example is shown as follows.

43.1. An approved means of security (e.g., data change audit trail) so that no changes may be made to its adjustable components **without evidence of the change**.

- The Sector was reluctant to propose changes to this Publication 14 checklist item without a corresponding change (and the benefit of discussion that would take place in developing such a change) to HB44 requirements.
- Audit trails are not intended to prevent metrologically significant changes from being made; they are intended to track and provide evidence of these changes.

Decision:
The Sector reviewed the changes made by the NCWM to include specific requirements for "categories of devices" and "methods of sealing" for water meters as shown in the "Background" section of this agenda item. The Sector reviewed the changes proposed to NCWM Publication 14 to reflect these Handbook changes as outlined in Appendix E to this summary and agreed to recommend these changes be adopted as shown.

The Sector agreed to include a future agenda and item and consider developing a proposal to recommend modifications to paragraph S.2.1. Provision for Sealing and corresponding paragraphs in other NIST HB44 measuring device codes to clarify that audit trails are intended to track and provide evidence of metrologically significant changes as a way of deterring unauthorized changes, not prevent such changes from being made.

E. Power Loss on Retail Motor-Fuel Dispensing Systems – Alignment of Pub 14 with HB 44

Background:
In the process of researching a technical question, the Sector Technical Advisor Tina Butcher (NIST OWM), noted a discrepancy between language in NCWM Publication 14 and that of NIST Handbook 44 with regard to power loss requirements for retail motor-fuel dispensers.

NIST Handbook 44 paragraph S.1.6.2. Provisions for Power Loss requires that transaction information needed to complete a transaction in progress at the time of a power loss be retained in the system for at least 15 minutes as follows:

S.1.6.2. Provisions for Power Loss

S.1.6.2.1. Transaction Information. *– In the event of a power loss the information needed to complete any transaction in progress at the time of the power loss (such as the quantity and unit price, or sales price) shall be determinable for at least 15 minutes at the dispenser or at the console if the console is accessible to the customer.*
[Nonretroactive as of January 1, 1983]

S.1.6.2.2. User Information *– The device memory shall retain information on the quantity of fuel dispensed and the sales price totals during power loss.*
[Nonretroactive as of January 1, 1983]

Paragraph S.1.6.2.1. Transaction Information gives examples of "quantity and unit price" or "quantity and sales price" as examples of the required information; however, the multiple corresponding code references to these paragraphs in Pub 14 specifies "quantity" and "total sale" values must be recallable.

This publication is available free of charge from: https://doi.org/10.6028/NIST.SP.1253

Recommendation:
The Sector is asked to consider recommending modifications to the power loss requirements in Pub 14 to align with HB44 (or suggest a change to HB44 to align with Pub 14). Proposed changes are outlined in Appendix F to this Agenda, which includes excerpts from the following portions of the LMD Checklist:

- **Retail Motor-Fuel Dispensers (RMFDs) –** Code References S.1.6.2.1. and S.1.6.2.2. Provisions for Power Loss – Page LMD-37
- **Cash-Activated RMFDs** - S.1.6.2. Provisions for Power Loss – Page LMD-47
- **Liquefied Petroleum Gas (LPG) Liquid Measuring Devices –** Code Reference S.1.5.6. - Page LMD-68
- **Mass Flow Meters -** Code References S.2.4.1. and S.2.4.2. on Page LMD-76
- **Hydrogen Gas Measuring Devices -** Code Reference S.2.3. on Page LMD-100 and LMD-106
- **Field Evaluation & Permanence Tests - CNG Devices -** Code References S.2.4.1. and S.2.4.2. on Page LMD-123

Discussion:
Sector Technical Advisor Tina Butcher (NIST OWM), reviewed this item, noting that, in the process of researching a technical inquiry, she had observed some differences between NCWM Publication 14 and NIST HB 44 with regard to the information that must be able to be recalled in the event of a power failure. She developed the proposed changes in Appendix F to help better align Pub 14 with HB 44. Discussion points included the following:

- The Sector debated what pieces of information would be needed as a minimum to reconstruct and finish a transaction conducted with an RMFD.
- Mr. Rich Miller (FMC) noted at least two pieces of information would enable a business to complete a transaction.
- NTEP and the NTEP laboratories have interpreted HB44 to require two specific pieces of information as being the minimum needed to complete a transaction.
- There was some debate, given the formatting of paragraph S.1.6.2.1., whether the paragraph intends to say that an example of minimum information would be "quantity and unit price" OR "quantity and total sales price" OR [only] "total sales price."
- NCWM Pub 14 provides more specific guidance to manufacturers and laboratories of how to apply the paragraph and helps ensure consistency in interpreting the requirement.
- The Sector believes the references in Pub 14 are supported by HB 44.
- Many of today's systems provide more than two pieces of information.

Decision:
The Sector agreed NOT to recommend the changes outlined in Appendix F to this summary. The Sector agreed that the current provisions in Pub 14 are a reasonable interpretation of HB 44 and are supported by HB 44. Sector members are asked to study the recommended changes (and the corresponding HB 44 paragraphs) in the coming year. Should any Sector member believe a change to either HB 44 or Pub 14 is warranted, an item should be proposed for the Sector's 2019 agenda to revisit the issue (or the member is free to independently propose a change to HB 44).

This publication is available free of charge from: https://doi.org/10.6028/NIST.SP.1253

Additional Items as Time Allows:

If time permits, the NCWM S&T Committee and/or other groups and individuals would appreciate input from the Measuring Sector on the measuring-related issues that are outlined in the remaining agenda items below. A copy of any regional association modifications or positions will be provided to the Sector when these are made available by the regions. For each item in this section, the Sector is asked to review the item and consider providing input that might assist the S&T Committee and other groups and individuals in their deliberations. For items included on the S&T Agenda, the content in this agenda is limited to a brief synopsis along with the current proposal. Full background information on these items can be found in the NCWM S&T Committee's 2018 Interim Report and July 2018 Carryover Agenda. The carryover agenda was posted after September 1, 2018 when it was distributed to the Regional Weights and Measures Associations.

4. Limiting Flow Rate During Field Testing of LPG Retail Motor-Fuel Systems

Source:
Mr. Robin Parsons (Parafour Innovations)

Recommendation/Item Under Consideration:
The Sector is asked to review and discuss the following proposal to modify NIST Handbook 44 LPG and Anhydrous Ammonia Liquid-Measuring Devices Code Paragraph N.4.1. Normal Tests and provide input to assist the submitter and the S&T Committee in considering this proposal.

Modify N.4.1. Normal Tests as follows to clarify the need to test the unit at the maximum discharge flow rate that the system is capable of in the application for which it was designed:

> **N.4.1. Normal Tests.** – The "normal" test of a device shall be made at the maximum discharge flow rate developed under the conditions of the installation. Any additional tests conducted at flow rates down to and including one-half the sum of the maximum discharge flow rate and the rated minimum discharge flow rate shall be considered normal tests. **Adjustments of the inlet valve of the proving device to limit the maximum flow of the device, as designed for and capable of in normal use (and as marked on the data plate as indicated on the device COC), shall be permitted.**
>
> (Amended 1998 **and 20XX**)

An alternative to changing the wording, and possibly warranted even IF changing the wording, would be to send a clarification statement to all state metrology enforcement divisions, explaining that the control of flow when testing a lower flow device with a high flow prover which could exceed the metrological rating of the device being tested, is both permitted and required.

Optionally, wording could be added to require the use of a proving device with a flow path diameter no greater than that of the device being tested, e.g., a $^3/_4$ inch metering device – uses $^3/_4$ inch prover or an 18 gpm max flow rate metering device uses an 18 gpm max flow rate prover.

Background:
The current market for LPG powered vehicles uses a liquid injection system, which causes an elevated temperature in the vehicle storage tank. In order to fill these vehicles, the LPG station must use a "High Differential Pressure" pump. These pumps typically have flow rates in the range of 20 to 30 GPM. Most LPG Autogas vehicle fueling dispensers, have meters with a maximum flow rate of 12 to 18 gpm. In normal operation, there is NO commercial/retail dispensing application where the receiving tank will take flow greater than 15 gpm, due to the design of the tank fill valve circuit, which has a maximum nominal flow path equal to +/$1^1/_2$ inch. However, most calibration inspectors use a 100 gallon volumetric prover, which has a $1^1/_2$ inch inlet valve. Thus, when performing a calibration verification draft, it is possible to exceed the maximum NTEP rated flow rate of the meter/dispenser do to the high capacity of the prover fill circuit (which is designed to be used for calibration of $^3/_4$ inch to 2 inch size meters) which could never be seen in the actual applications for which the dispenser is designed. Many prover operators/inspectors interpret HB44 section N4

Testing Procedures, N.4.1. Normal tests, to mean that they are forbidden to adjust or "throttle" the volumetric prover inlet valve to be within the range of the NTEP documented min/max flow rate, which is greater than the possible in-use for application flow rate. Therefore, when they run the draft at the maximum flow the dispensing system is capable of when attached to a high flow prover, they are substantially exceeding the maximum design flow rate of the dispenser, and the actual maximum flow rate it can ever achieve in any typical metering activity. Sometimes they red-tag the unit and tell the customer they need a higher capacity meter, and sometimes they adjust the calibration to be within tolerance with the meter over-speeding, which of course results in the meter being out of tolerance when used in normal operations for which it is designed.

Discussion:
Sector Chairman Michael Keilty introduced this item, after which the submitter, Mr. Parsons (Parafour Innovations) provided an overview of the issues surrounding the proposal, including the following points:

- Many changes in technology have occurred in the LPG metering arena in recent years.
- A high differential pressure pump is needed to overcome the pressure of the system.
- An NFPA requirement for a stop-fill valve was imposed that automatically limits retail motor-fuel applications to 12 gpm.
- Many service companies and industry use a 100-gallon prover to test LPG RMFDs. Many of these provers have a 1-$^1/_2$" fill port ball valve on them. When this valve is hooked up to a large opening, this can result in over-speeding the meter.
- Most new stations can only exceed the rated maximum flow on the meter during testing.
- Prover operators need to throttle the flow rate down to avoid exceeding the marked maximum flow rate on the meter.
- If service companies calibrate at higher flow rates than are normally used, runs made at flow rates used for normal deliveries are then out of tolerance.
- The current language in paragraph N.4.1. results in the inspector conducting a test at the highest speed that can be achieved in the installation with the prover. This results in exceeding the meter's maximum rated flow.
- For systems that comply with applicable NFPA requirements, no retail applications will exceed 18 gpm and no vehicle fueling system will exceed 10 gpm.

Discussion by the Sector included the following points:

- A nozzle is capable of higher flows, but the flow rate will be restricted as a result of the pressure on the tank and the orifice size of the receiving tank.
- Throttling the ball valve manually is subject to introducing errors.
- Might a solution be to mark the limitation for the flow rate on the device.
- The purpose of the language in N.4.1. is to verify that the system would not enable flow rates in excess of the marked meter rating. Relying on the operator to consciously restrict the flow opens the possibility for using the system outside of its maximum ratings. Thus, the inspector tests the highest flow that can be achieved in the installation and is striving to ensure that the system can't be made to exceed the marked maximum during a delivery.
- The highest flow rate that can be achieved by the inspector during testing may not reflect the highest flow rate that can be achieved in normal use.
- Regulatory agencies typically carry a number of adaptors with their proving system to enable the proving system to be hooked up to a variety of different fueling valves. Might a valve for use in testing RMFDs that limits the flow rate to the NFPA specified rate be added to this list and its use specified in the test procedures?

This publication is available free of charge from: https://doi.org/10.6028/NIST.SP.1253

This publication is available free of charge from: https://doi.org/10.6028/NIST.SP.1253

- How would the inspector verify that "normal" deliveries won't exceed the flow rate at which they have tested the system (and the marked maximum)? Observing and timing an actual delivery may not provide a reflection of the highest possible flow rate since flows can be dependent on the receiving tank. We need to consider that receiving vehicles are not owned by the device owner, so it is not possible to control the receiving valves.
- Measurement Canada requires a valve that automatically limits the flow rate to within the meter's marked maximum flow rate.
- In order to automatically limit the flow rate into a prover, one would have to put a restriction on the nozzle to limit the flow to the largest anticipated being used in normal applications.
- The wording currently proposed may not have the intended effect since the phrase "shall be permitted" may be read as permissive rather than required. Modifications to the wording might need to be considered.

Decision:
The Sector made no decisions on this issue; however, members shared their observations and thoughts to assist the submitter in the development of his proposal. At the point the submitter is ready to submit a proposal to the NCWM, he should complete the appropriate form (Form 15, found on the NCWM website at* www.ncwm.com/*) and submit it as instructed on the form. The deadline (September 1, 2018) has passed for this cycle, but it could be submitted for a future cycle.

5. Development of Infrastructure to Validate the Use of "Master Meters"

Source:
NIST OWM

Background Information:
Over the past few years, weights and measures jurisdictions and industry have expressed an interest in using "master meters" to conduct testing of compressed natural gas metering systems and other types of measuring systems. OWM concurs that the use of master meters has merit and may offer a safer, more cost effective, and time efficient method of testing for some types of measuring systems than other test methods. The Measuring Sector has also worked to identify criteria to allow the use of "master meters" in type evaluation testing using criteria provided by NIST regarding "essential elements of traceability."

As mentioned in its comments on this general subject on related issues before the NCWM S&T Committee over the past few years, OWM has pointed out that ensuring traceability of measurements and compliance with the Fundamental Considerations of NIST Handbook 44 is critical to ensuring credibility and support of any test method for use in official testing. OWM has been repeatedly asked by regulatory officials and industry for assistance and guidance in putting this infrastructure in place. In order to assist regulators and industry in this endeavor, OWM is devoting resources to working with industry and officials to assist in the development of a framework that will facilitate the validation of this test method.

OWM is in the process of purchasing six Coriolis meters for the purpose of collecting and analyzing data obtained from field testing using this method. NIST OWM will purchase the following Coriolis meters:

- Two $^1/_2$ inch
- One 1-inch
- Two 1 $^1/_2$ inch and
- One 3-inch, and
- $^1/_2$ inch meter, specific for testing CNG.

This publication is available free of charge from: https://doi.org/10.6028/NIST.SP.1253

Recommendation:
This item is included on the Sector's agenda to allow OWM to provide an update on this project if time allows. No action is asked of the Sector; however, input is welcome.

Discussion:
Sector Chairman Michael Keilty introduced this item, after which the submitter, Mrs. Tina Butcher (NIST OWM) provided an overview of the issue as outlined above. NIST OWM requested this item be included on the agenda to make the Sector aware of the project to research the use of mass flow meters used as master meters and to seek help from manufacturers and others who might assist in collecting data. She noted that NIST is particularly interested in collaborating with facilities where testing might be conducted over a range of temperatures and with different types of products.

Discussion by the Sector included the following points:

- Use of master meters in CNG metering system inspection and testing is of particular interest to regulators and industry. Industry and regulators are already using master meters in this application.
- Tulsa Gas Technologies has assembled a test unit that uses a mass flow meter as a master meter for using testing CNG metering systems. The Sector Chairman noted that he understands Tulsa has sold around 20 of these units globally, including to regulators in states such as Colorado and Florida.
- Mr. Rich Miller (FMC) suggested NIST might consider going through independent laboratories that are certified and work with them. FMC doesn't deal much with smaller meters; most of their testing system is focused on large meters. There is a lot of data on large meters used as master meters.
- Mr. Marc Buttler (MicroMotion) raised the question of what proportion of testing of RMFDs is done using acceptance tolerance vs. maintenance tolerance. This should be considered in designing the test protocol.
- Measurement Canada can explore possible opportunities for collaboration with their testing laboratory since they do have the ability to test over a range of temperatures.
- The spring 2019 NTEP Laboratory Meeting will be held in Tulsa, Oklahoma with the goal of visiting Tulsa Gas Technology and allowing evaluators the opportunity to observe testing and learn about the use of Tulsa's master meter test unit.

Decision:
The Sector made no decisions on this issue; however, members shared their observations and thoughts to assist the submitter in further progress with the project. There was general support for the concept of using master meters in routine field testing by service companies and regulators.

6. S&T 2018 Carryover Item VTM-1B – S.3.1.1. Diversion of Measured Liquid and UR.2.6. Clearing the Discharge Hose

Source:
New York and NIST OWM (2018)

Purpose:
Provide specifications and user requirements for manifold flush systems to help ensure their design and use does not facilitate fraud. Recognize that there is a balance between a mechanism that provides an important safety benefit but also, if used incorrectly, facilitates fraud. Ensure that VTM owners understand their responsibilities when installing such a system and ensure uniformity in enforcement throughout the country.

Items Under Consideration:
See Appendix G to this Agenda.

This publication is available free of charge from: https://doi.org/10.6028/NIST.SP.1253

Background:
At its 2018 NCWM Annual Meeting, the NCWM adopted modifications to Paragraph S.3.1. Diversion of Measured Liquid and added new Paragraphs S.3.1.1. Means for Clearing the Discharge Hose and UR.2.6. Clearing the Discharge Hose. Additional changes to these paragraphs were considered at that meeting, but they could not be acted upon without delaying the original proposal. The S&T Committee agreed to carryover a portion of that item as outlined in the "Items Under Consideration" above to allow the submitter and OWM to propose additional changes to help ensure these flush systems are designed and used in such a was so as to minimize the facilitation of fraud.

For full details on this issue, including the submitter's justification and recommendations and other background information, please see Appendix A, Page S&T – A5 in the S&T Committee's 2018 Interim Report.

Discussion:
Sector Chairman Michael Keilty introduced this item, after which the submitter, Mrs. Tina Butcher (NIST OWM) provided an overview of the issue as outlined above at in the S&T Committee's Report. Discussion by the Sector included the following points:

- A flush system would have to be designed to communicate with different companies' metering systems to comply with the proposed requirements.
- New firmware may be needed in the metering system.
- It isn't clear what type and extent of electronics, if any, exist on the flushing systems.
- With electronic metering systems it may be possible to accomplish what is proposed, but not for mechanical systems. The requirements for flushing systems are directed toward electronic systems at present.
- Is the current 3-minute timeout limit too short to facilitate use with these systems?

Decision:
The Sector made no decisions on this issue; however, members shared their observations and thoughts to assist the submitter in further progress with the project. There was general acknowledgement of the need to provide safeguards to deter fraud with these systems, but there are questions which much be resolved regarding how these provisions can be accomplished.

7. S&T 2018 Carryover Items in Block 4 – Terminology for Testing Standards

Source:
NIST OWM (2018)

Purpose:
To remove the current limited definition and use of the term "Transfer Standard" and eliminate terms "Testing Standards", "Verification (Testing) Standards", and instead use the term Field Standard, consistent with its reference in Handbook 44, Appendix A, Fundamental Considerations and its use in several sections of Handbook 44. To correct the broad use of the term Transfer Standard and instead replace its use with the term Field Standard. To update all use of the term "standard" to use the term "Field Standard." To remove the current limited definition of Transfer Standard and instead use the term Field Standard.

Item Under Consideration:
See Appendix F to this Agenda.

Background:
A review of terminology used to describe standards used in field testing indicate a number of inconsistencies in both NIST Handbook 44 as well as in common usage. For example, the term "transfer standard" is used in the Cryogenic Liquid-Measuring Devices Code and defined in Appendix D of Handbook 44; however, the definition is limiting in scope and may be better termed simply a "field standard." All instruments/devices used as a Field Standard in the

testing of Weighing and Measuring Devices, regardless of nomenclature, must comply with the requirements of NIST HB 44, Appendix A, Fundamental Considerations Associated with the Enforcement of Handbook 44 Codes, paragraph 3.2 Testing Apparatus, Adequacy. Using the term transfer standard as it is recently being applied in no way negates this requirement of adequacy and confuses the user as to the nature of the field standard being used. Likewise, the term "standard" to describe a field standard can also cause confusion since there are multiple meanings associated with the word "standard."

There are also multiple definitions pertaining to various types of "standards" in NIST Handbook 130 that may be confusing relative to the terminology used in Handbook 44. OWM identified proposed changes in multiple areas of Handbook 44 (as shown in the Item Under Consideration in Appendix F to this Agenda) in an attempt to improve the consistency among the various references in Handbook 44. Although OWM heard support for the proposed changes to the Metering Codes from MMA, others recommended "Developing" status. Some of the comments received included whether or not current standards referred to as "transfer standards" should be considered "field standards" and if these standards were intended or can meet the fundamental considerations that state "when the standard is used without correction its combined error and uncertainty must be less than one-third of the applicable tolerance.' Based on comments received and those made at the 2018 Interim and Annual Meetings, it is clear this issue is more complex that originally envisioned and OWM concurs that additional development is needed.

During the S&T Committee's work session at the 2018 NCWM Annual Meeting, the Committee agreed to recommend that the entire block of items move forward as "Developing." The Committee also concluded that all of the block 5 items, as well as LPG-4, and MFM-2 are related to the Block 4 items due to terminology, and that the submitter of the Block 4 items (OWM) provide detail of their developing language to the submitter of the related items (Endress & Hauser Flowtec AG USA) to prevent conflicting terms as they are considered during future meetings.

For full details on this issue, including the submitter's justification and recommendations and other background information, please see Appendix A, Page S&T – A17 in the S&T Committee's 2018 Interim Report.

Recommendation: This item is still under development. OWM has received a number of comments on this proposal and is continuing to work on revisions to the proposal in response to those comments. This item is included to keep the Sector apprised of the work and OWM continues to welcome comments to assist in further developing changes to various HB44 codes and sections that will improve understanding and consistency relative to references to test standards.

Discussion/Decision:
Sector Chairman Michael Keilty introduced this item, after which the submitter, Mrs. Tina Butcher (NIST OWM) provided an overview of the issue as outlined above at in the S&T Committee's Report and made several points:

- This item turned out to be more complicated than originally thought.
- OWM has begun reviewing other sections of NIST HB 44 which use the terms in this agenda item as well as and other terms related to standards. OWM has also reviewed terminology used in NIST HB 130 (particularly the Model Weights and Measures Law), which includes a number of definitions for terms describing various types of standards.
- There appears to be confusion within the weights and measures community about various terms used to describe standards, including what they mean and how they are used; what criteria applies to them; and how they are verified. From comments shared on these issues before the S&T Committee, there also appears to be inconsistent use and understanding of terms associated with these standards.
- This item is related to other items on the S&T Committee agenda regarding the use and terminology of standards. This item is also related to Sector Agenda Item 5 on "master meters."
- OWM believes this item still needs work.

This publication is available free of charge from: https://doi.org/10.6028/NIST.SP.1253

This publication is available free of charge from: https://doi.org/10.6028/NIST.SP.1253

The Sector did not discuss this item in great detail; however, a few comments were shared:

- The standards addressed in Sector Agenda Item 8 are intended to be used on a short-term basis for conducting a specific test.
- This agenda item broadly addresses different types of standards and terminology used to describe them.
- Measurement Canada has various terms such as "travelling standard" which are used to describe different types and applications of standards.
- Terminology used in the International Vocabulary of Measurement (VIM) should be considered and reviewed and an attempt made to align the terminology with the VIM.

Decision:
The Sector did not reach any conclusions on this item. There was general acknowledgement of the need to align terminology and recognize various types of standards used in field testing; more work and discussion by the weights and measures community will help ensure consistency of understanding and application. The item remains under development and is related to and/or has overlap with the work being done by NIST OWM in Sector Agenda Item 5 as well as the S&T proposal outlined in Sector Agenda Item 8.

8. S&T 2018 Carryover Items in Block 5 – Define Field Reference Standard

Source:
Endress + Hauser Flowtec AG (2018)

Purpose:
Add definition for field reference standard meter to NIST HB44. Delete transfer standard definition. Change terms in sections 3.34, 3.38, and 3.39.

Item under Consideration:
Amend paragraphs in multiple codes as follows. See Appendix F to this agenda for the specific proposed changes.

B5: CLM-2	D	N.3.2. Transfer Standard Test and T.3. On Tests Using Transfer Standards
B5: CDL-2	D	N.3.2. Transfer Standard Test and T.3. On Tests Using Transfer Standards
B5: HGM-2	D	N.4.1. Master Meter (Transfer) Standard Test and T.4. Tolerance Application on Test Using Transfer Standard Test Method
B5: OTH-4	D	Appendix D – Definitions: field reference standard meter and transfer standard

Background:
During NCWM S&T Committee open hearing discussions in July 2017, it was pointed out that the term transfer standard which is used in the proposal to amend NIST HB44 3.37 N.3 and 3.32 N.3 Test Drafts is incorrect. The statement made also suggested that the use of transfer standard is incorrectly used in HB44 code sections 3.34, 3.38 and 3.39. It was suggested that a more appropriate term to use is "field reference standard" or "field reference standard meter." There is no definition in OIML G18 which supports the use of the term "transfer standard." There is suggestive basis to support reference standard as it is used textually in OIML G18.

NIST has no procedural documents in place to justify the revision with a definition. The definition of transfer standard is used in code sections 3.34, 3.38 and 3.39 and that those sections do not need to change.

During the 2018 NCWM Interim Meeting, open hearings the S&T Committee heard comments from Mr. Michael Keilty (Endress & Hauser Flowtec AG USA), submitter of this block of items. Mr. Keilty reported he had developed this proposal with help from Mr. Henry Oppermann (Weights and Measures Consulting, LLC). In written comments to the Committee by Mr. Oppermann, on another item. Mr. Oppermann opposed the term "Transfer Standard" in that it is a temporary measurement reference. Mr. Keilty stated that he agrees with this interpretation and states that what

he is proposing is for a "field reference standard meter" term and recommends that the items move forward (he did not specify to what status).

Mr. Henry Oppermann (Weights and Measures Consulting, LLC) provided comments for Stand Alone Items LPG-4 and MFM-2. Mr. Oppermann agrees with Mr. Keilty that these are field standards, however, the terminology "field reference standard meter" should just be "field standard". Anything that meets the one-third requirement should be accepted, but currently, there is no data to prove that these can meet the one-third requirement. He stated that this proposal specifies that the size of the test draft be in two minutes but has no explanation for the size, and it conflicts with the previous proposal that said that larger test drafts were needed. He also stated that the definition for "field reference standard meter" is vague and insufficient, the requirements for accuracy and repeatability are not defined. He commented that a NIST 105 series handbook is not yet established for these and that there are currently no test procedures or parameters for performance requirements to demonstrate these systems can meet the requirements. The definition would apply to all codes and more study and assessment is needed. He commented that more data is needed before this is moved forward, and that the items should be given a "Developing" status.

Mr. Constantine Cotsoradis (Flint Hills Resources) provided comments, at this time, intending to address item MFM-2 (see Item MFM-2 for comments).

Mr. Keilty asked the Committee that it be noted that the 2 previous commenters, Mr. Oppermann and Mr. Cotsoradis, were speaking to Stand Alone Items LPG-4 and MFM-2 and not only Block-5.

Mr. Dmitri Karimov (Liquid Controls), speaking on behalf of the MMA, reported that while the MMA supports Block 4, the terminology in Block 5 conflicts with those in Block 4 and therefore recommends that the Items be Developing.

Mr. Ross Andersen (New York- retired) commented that all standards are a transfer standard, transferred from one measurement to another. He stated that what is needed is to make sure that the standard we use is accurate to one-third of the applied tolerance. In regard to the data that has been discussed, he asks where is the data for what we use now? There is none. It was just selected. He stated that what we need is one test method as the "referee standard" and that whatever test method is used, that it can agree with the reference.

During the Committee's work session, the members considered the comments heard on this block of items. The Committee agreed to recommend that this block of items move forward as Developing. The Committee also agreed that all the Block 5 items, as well as LPG-4, and MFM-2 items are related to the Block 4 items due to terminology and that the submitter of Block 4 (OWM) provide detail of their developing language to the submitter of the related items (Endress & Hauser Flowtec AG USA) to prevent conflicting terms as they are considered during future meetings.

The Committee did not take comments during open hearings on Developing items at the 2018 NCWM Annual Meeting except to grant the submitter of a Developing item (or block of Developing items) an opportunity to provide an update on the progress made to further develop the item(s) since the 2018 NCWM Interim Meeting.

Mr. Keilty (developer of this item) provided comments during the NCWM annual meeting open hearings. He mentioned that this item has been before the conference since 2015. He agreed that the definitions are confusing and agrees with the work that NIST is doing to clarify the terminology. Mr. Keilty recommended that any new information be presented at the January meeting and recommends that Block 5 items move forward as Voting items at the 2019 NCWM Annual Meeting.

The Committee received written comments from Seraphin on all items in Block 4 regarding transfer standards raising several concerns and recommending the items remain Developmental until such time those concerns have been resolved.

OWM provided the following written recommendations and comments to this block of items as feedback to the submitter and as part of its analysis of the S&T Committee's 2018 agenda items

This publication is available free of charge from: https://doi.org/10.6028/NIST.SP.1253

This publication is available free of charge from: https://doi.org/10.6028/NIST.SP.1253

The Committee agreed to carryover this block of items on its 2019 agenda to allow for further discussion and development of these proposals.

For full details on this issue, including the submitter's justification and recommendations and other background information, please see Appendix A, Page S&T – A20 in the S&T Committee's 2018 Interim Report.

Discussion:
Sector Chairman Michael Keilty introduced this item and provided comments as the submitter of the item:

- There are items on the S&T Committee agenda proposing to modify the test criteria for mass flow meters and cryogenic metering systems when tested using "transfer standards" which prompted this item.
- This item proposes changes to that term in multiple codes and in definitions in an attempt to align the terminology and make it consistent across codes and with language being considered in the related S&T Item on terminology for testing standards.
- These items were submitted in 2017 and were also discussed at NCWM meetings in 2018.
- The standards addressed in this item are intended to be used on a short-term basis for conducting a specific test.

Sector comments were limited, though included some comments regarding the use of metering devices as standards and the acknowledgement that the use of such equipment will be of benefit to regulators and industry.

Decision:
The Sector did not reach any conclusions on this item. There was general acknowledgement of the need to align terminology and recognize various types of standards used in field testing; more work and discussion by the weights and measures community will help ensure consistency of understanding and application.

9. S&T 2018 Carryover Items in Block 7 – Address Devices and Systems Adjusted Using a Removable Digital Storage Device

Source:
NIST OWM (2013)

Purpose:
Expand the scope of definition to cover instances where the "other device," as noted in the current definition, may be necessary to the operation of the weighing or measuring device or which may be considered a permanent part of that device.

Item under Consideration:
The Sector is asked to review and provide input on the following items under this block. See Appendix F to this Agenda for proposed language under consideration for these items.

B7: GEN-2	D	G-S.8.2. Devices and Systems Adjusted Using Removable Digital Device Storage
B7: LMD-1	D	S.2.2. Provision for Sealing.
B7: VTM-2	D	S.2.2. Provision for Sealing.
B7: LPG-2	D	S.2.2. Provision for Sealing.
B7: HGV-1	D	S.2.2. Provision for Sealing.
B7: CLM-4	D	S.2.5. Provision for Sealing.
B7: MLK-1	D	S.2.3. Provision for Sealing.
B7: WTR-1	D	S.2.1. Provision for Sealing.
B7: MFM-1	D	S.3.5. Provision for Sealing.

This publication is available free of charge from: https://doi.org/10.6028/NIST.SP.1253

B7: CDL-4	D	S.2.5. Provision for Sealing.
B7: HGM-3	D	S.3.3. Provision for Sealing.

Background:
The proposal was originally intended to address the use of removable digital storage devices, such as USB flash drive, memory cards, etc. in grain moisture meters (GGMs). This proposal was later expanded to address all device types when it was recognized that other weighing and measuring systems may make use of the same type of media to make metrologically significant changes. The scenario originally identified in this item recognized that there are systems in which removable digital storage devices can be used as either data transfer devices that are not necessary to the operation of the device or as data storage devices which are necessary to the operation of the device. If removable data storage devices are necessary to the operation of the device, they are not covered by the current definition of remote configuration capability in NIST HB 44.

Rather than propose requirements which could potentially impact weighing and measuring systems using other methods of making metrologically significant changes, OWM is proposing the addition of:

(1) A General Code paragraph (G-S.8.2.) which specifies the method of sealing for those devices which can be adjusted using digital storage media; and

(2) Changes to each specific HB44 code to reference this new General Code paragraph as the required method of sealing for those devices which can be adjusted using digital storage media.

The intent of proposed new paragraph G-S.8.2. is to address the sealing of devices and systems adjusted using a removable digital storage device that must remain in the device in order for the device to be operational. The intent of all the other items in this block is to provide an exemption to the existing sealing requirements in each of the device codes being applied when the calibration or configuration parameters are changed using a removable digital device and direct those performing the inspection to paragraph G-S.8.2.

OWM has developed multiple iterations of these proposed changes based on comments from the weights and measures community, including from the NTEP Measuring Sector. The most recent proposal (with changes to the General Code paragraph to address comments made at the 2018 Interim Meeting) are shown in the Item Under Consideration in Appendix F to the Sector's Agenda. With these changes, OWM believes these items are fully developed and ready for vote.

During its work session at the July 2018 NCWM Annual Meeting, members of the S&T Committee agreed that the amended version of paragraph G-S.8.2. offered by OWM to address the concern raised by a meter manufacturer improved clarification. Consequently, the Committee agreed to OWM's request to replace the existing proposed paragraph G-S.8.2. with the amended version made available by OWM and as shown in Item under Consideration for this item. No other changes were made to any other item in this block and members of the Committee agreed they believe the items in this block are fully developed and should be presented for vote in the 2019 NCWM Conference cycle. Refer to the Committee's 2018 Interim Report to view the version of paragraph G-S.8.2. that was replaced by the Committee at the 2018 NCWM Annual Meeting.

For full details on this issue, including the submitter's justification and recommendations and other background information, please see Appendix A, Page S&T – A23 in the S&T Committee's 2018 Interim Report.

Discussion:
Sector Chairman Michael Keilty introduced this item, after which the submitter, Tina Butcher (NIST OWM) provided an overview of the issue as outlined above at in the S&T Committee's Report. Mrs. Butcher noted:

- The item has been modified twice since it was last reviewed the Measuring Sector; once in response to a suggestion made at the last Sector meeting and once in response to comments made during the open hearings at the Interim Meeting and by the Scale Manufacturers Association.

- The proposed approach strives to minimize impact on device types which are not adjusted using removable digital storage devices and are adequately addressed by current sealing requirements.

Discussion by the Sector included the following points:

- Might an additional category of sealing be added to the existing sealing tables?
- The current provision for sealing tables are based on a definition of "remote configuration capability" which does not fit these devices which are adjusted using removable digital storage devices.
- The proposed approach allows devices with this capability to be addressed without impacting devices with other types of access.
- Including the reference in the General Code simplifies the requirements and helps improve consistency for controlling access to adjustments to metrologically significant parameters on electronic devices.
- The proposed requirement will need to be reviewed as new technologies and methods of access come into the marketplace.

Decision:
The Sector made no decisions on this issue; however, members acknowledged modifications to address past Sector concerns. Individual Sector members will continue to study the proposal can share any suggested changes directly with the S&T Committee.

10. S&T 2018 Carryover Item GEN-3 – G-S.2. Facilitation of Fraud – "Skimmers"

Source:
Arizona, Florida, Maine, Michigan, and Cambridge, MA (2018) and NCWM S&T Task Group on Skimmers

Purpose:
To prevent access and tampering by unauthorized persons to any area of the device where electronic financial transactions occur, credit card information is obtained, and or personal information is stored or transmitted.

Item under Consideration: See Appendix F to this Agenda.

Background:
The following background information appeared with this item when it was originally presented to the S&T Committee:

> Given the potential financial impact to consumers and credit issuing companies Weights & Measures recognizes the need to offer more protection to both buyer and seller in these transactions. The current design of these devices offers little to no barrier to fraud through theft of credit information, as such it is our belief that the current design, in most cases, already violates G.S.2. by facilitating easy access to allow installation of these fraudulent card reading devices. Therefore, in our opinion stronger means must be implemented to decrease the potential for fraudulent activity with these devices.
>
> The Florida Department of Agriculture and Consumer Services estimates that on average, each skimmer results in 100 counterfeit cards, each of which are used to make $1,000 in fraudulent purchases. In other words, a single skimmer typically leads to $100,000 in theft. This is a nationwide problem that causes millions of dollars in fraudulent charges to consumers, device owners and banking institutions each year. A solution can be achieved through upgraded security measures on the weighing and measuring devices that fall within the guidelines of this handbook.
>
> One possible argument is that these preventative measures should be in User Requirements instead of in Specifications, but this is intended to be a long-term solution. The State of Florida has enacted legislation to

This publication is available free of charge from: https://doi.org/10.6028/NIST.SP.1253

require device users to add security measures. They have found that most owner/operators have chosen to use security seals or non-standard locks on the dispensers and that 85% of the skimming equipment being found is in devices with user applied security measures. User applied security measures are not as effective as electronic security and/or unique, tamper proof locks. The current design of these devices offers little to no barrier to fraud through theft of credit information, as such it is our belief that the current design, in most cases, already violates G.S.2. by facilitating easy access to allow installation of these fraudulent card reading devices.

Manufacturers of these devices may argue that the cost to make the necessary upgrades will be prohibitive. This item is not intended to be retroactive and the cost of the additional security measures will be universal and not place any manufacturer at a competitive disadvantage. Several manufacturers of electronic security systems designed for retail motor fuel dispensers have products available and at least three new manufacturers of low-cost systems have recently come into the marketplace (at least one of them is working with OEM manufacturers and the security systems are being integrated into newly manufactured dispensers).

At the 2018 NCWM Interim Meeting, the S&T Committee heard comments both in favor or and in opposition to the proposal. The Committee agreed to recommend giving this item an "Assigned" status and requested the formation of a Task Group (TG). At the 2018 NCWM Annual Meeting, Mr. Hal Prince (FL), Chairman of the TG reported the following to the Committee, noting work is ongoing and the TG has been meeting bi-weekly since May 2018:

1. Is this a weights and measures issue that NCWM should take on?
2. If so, does weights and measures have the authority to require manufacturers and users of commercial weighing and measuring equipment to take whatever steps needed to ensure such equipment prevents unauthorized access to nonmetrological changes to the equipment?

Mr. Prince further reported members of the TG were recently surveyed and asked these questions, but results are not yet available. It is hoped more information will be available to report at the next (2019) NCWM Interim Meeting.

Mr. Prince also stated that more members and stakeholders are needed for the TG. Members of the TG believe that Weights and Measures needs an educational component, e.g., an outreach program set up for law enforcement and consumers and perhaps a "best practice guide" developed.

For full details on this issue, including the submitter's justification and recommendations and other background information, please see Appendix A, Page S&T – A27 in the S&T Committee's 2018 Interim Report.

Discussion:
Sector Chairman Michael Keilty introduced this item, pointing out that the S&T Committee has assigned a Task Group with the charge of reviewing the proposal initially presented to the S&T Committee along with comments received on the proposal thus far. Discussion by the Sector included the following points:

- While acknowledging that weights and measures officials and service personnel might play a role in helping to address the problem of skimmers in RMFDs, multiple Sector members observed that the authority to address skimmers seems to be outside of the scope of most weights and measures jurisdictions.
- Although a thief may use an RMFD to steal credit card information, the skimmer does not typically affect the measurement transaction itself.
- The use of skimmers to steal credit card information is a serious issue, one that affects more than retail motor-fuel dispensers and one which may require a broader solution.
- Implementing specifications to change the design of RMFDs to prevent/deter skimmer use is burdensome for manufacturers and costly to devices owners and, in turn, consumers. Thieves quickly act to implement measures to circumvent such changes, resulting in increased costs to device owners with limited benefit.
- Guidelines for officials to assist law enforcement agencies that do have authority over this type of fraudulent activity might be of use in helping to address this problem.

This publication is available free of charge from: https://doi.org/10.6028/NIST.SP.1253

- Measurement Canada's legal metrology regulations do not go beyond the measurement process. They do not get involved in the payment process.

Decision:
The Sector made no decisions on this issue. The Sector acknowledges and appreciates the work being done by the Skimmers Task Group and will look forward to the opportunity to review any recommendations from that group.

11. S&T 2018 Carryover Item LPG-3: S.2.5. Zero-Set-Back Interlock, Stationary and Vehicle-Mounted Meters, Electronic

Source:
Maryland (2018)

Purpose:
To align the LPG code with the VTM code for electronic registers/indicators used in stationary and mobile applications.

Item under Consideration:
See Appendix F to this Agenda.

Background:
This specification has been in place for VTMs for many years. Its purpose is to prevent a second party from being charged for product delivered to the first party. However, there is no requirement for interlocks in the LPG Code, other than the requirement added in 2016 for stationary retail motor fuel devices. Currently, the only protection is provided by two User Requirements paragraphs, UR.2.5. Ticket in Printing Device, which prohibits the "riding of tickets" (having a ticket in the printer while the vehicle is moving from one location to another) and UR.2.1. Return of Indication and Recording Element to Zero, which requires the indications to be set to zero before a delivery. Both requirements are extremely difficult, if not impossible to enforce where printers are frequently mounted in the cab of the vehicle and are not visible to an observer outside the vehicle. In addition, electronic registers used in stationary applications shall not be exempt from this requirement due to the possibility of a second party being charged for product delivered to the first party in this scenario as well.

This requirement for electronic indicators already exists in the VTM Code and being as the majority of electronic registers are used in both applications, I cannot see any objections as to why this requirement should be added to the LPG and Anhydrous Ammonia Liquid-Measuring Device Code.

During the 2018 NCWM Interim Meeting, the Committee received multiple comments in support of this item, including comments from NIST OWM suggesting some modifications adjustments to the proposed language. Based on comments received, the Committee felt nonretroactive date is needed before advancing the item to a Voting status and changed the status to Developing pending agreement on an effective date. The Committee did not invite comments from other than the submitter at the 2018 Annual Meeting. No updates were provided.

During the Committee's work session, members of the Committee felt that the nonretroactive date needed to be included before the item could be advanced to a Voting status. The Committee elected to maintain the item on its agenda as Developing pending agreement of an effective date.

The Committee did not take comments during open hearings on Developing items at the 2018 NCWM Annual Meeting except to grant the submitter of a Developing item (or block of Developing items) an opportunity to provide an update on the progress made to further develop the item(s) since the 2018 NCWM Interim Meeting. There were no comments or updates provided on this item by the submitter at the Annual meeting.

For full details on this issue, including the submitter's justification and recommendations and other background information, please see Appendix A, Page S&T – A51 in the S&T Committee's 2018 Interim Report.

This publication is available free of charge from: https://doi.org/10.6028/NIST.SP.1253

Discussion/Decision:
The Sector only briefly discussed this item and made no decisions or recommendations. While this requirement has been in place for VTMs for some time, some Sector members questioned what the impact might be on LPG systems and whether or not they are able to readily comply at present. Should the item progress, the submitter should consider specifying a nonretroactive date.

12. S&T 2018 Carryover Item LPG-5: N.4.1.2. Repeatability Tests and N.4.2.4. Repeatability Tests for Type Evaluation

Source:
Ross Andersen, Retired (2017)

Purpose:
To address differences between Handbook44 and Publication 14 practices for repeatability testing.

Item under Consideration:
See Appendix F to this Agenda. This version of the Item Under Consideration reflects changes proposed by the submitter following the July 2018 NCWM Annual Meeting.

Background:
The proposal is aimed to correct a number of areas of confusion. First, the inclusion of repeatability in the N.4.1. series indicates that repeatability is to be run at normal flow rates. There was some confusion if this was the actual intent when these sections were added to HB44 in multiple codes. Running the tests only at Normal flow rates is consistently how the test was typically performed in the field. The amendment to N.4.1.2. was to clarify this explicitly for field tests and type evaluation tests.

A new paragraph was proposed because NTEP has required repeatability on tests over the entire range of flow rates conducted under controlled conditions during type evaluation testing. This means anywhere between rated maximum and minimum flow rates. The proposed code addition would have formalized and legitimized what has been done for a long time.

Another question arose whether gross or net results could be used in repeatability tests? Obviously, you can't compare net to gross but you can compare three consecutive gross or three consecutive net results. The tolerance paragraph in the LPG Code specifies the tolerance does not apply to the test of the compensator. Also, the practice in HB44 is to test one variable at a time to the extent possible, the revision clarifies that repeatability is addressed to gross meter performance only. This can be through deactivating the ATC or just using gross values where both gross and net are available from the same test.

The submitter provided proposed changes with the goal of clarifying and maintaining the status quo as the code is presently written. Following the July 2018 Annual Meeting, the submitter submitted a revised version of the Item Under Consideration in response to comments received on the item. The proposal outlined in the Item Under Consideration reflects the updated version provided by the submitter. The submitter provided additional analysis and rationale for the updates made to the original proposal as outlined below.

In the original proposal (carried as developing item LPG-5 in **2018 L&R Report**), the intent was to address only the LPG code and preserve the status quo based on what presently appears in the Handbook. It was understood that the decisions on this item would set precedents affecting all LMD codes that contained a repeatability test. After discussion at the 2018 NCWM Interim and Annual Meetings, with various Meter Manufacturers, with OWM, and with other interested parties, the original proposal is being amended. The questions being posed have been broadened to include all LMD codes. The issues in this revision can now be expressed through the following questions:

1. Should the repeatability test be conducted net (compensated) or gross (uncompensated)? Or possibly, are both allowed provided all test results are from the same mode of operation?

This publication is available free of charge from: https://doi.org/10.6028/NIST.SP.1253

This publication is available free of charge from: https://doi.org/10.6028/NIST.SP.1253

Response to Issue 1.

In developing this item, I heard comments agreeing with the original proposal to use only gross results and comments differing in that either gross or net should be accepted provided all results are from the same mode. The tolerance paragraph in the LPG/NH4 code indicates the test does not apply to the test of the ATC system. It can be argued that the ATC system already has a performance requirement in T.4., requiring agreement between net and gross, i.e. compensated and uncompensated results. This tolerance reads much like the T.3. paragraph. Also, Handbook 44 precedent tends to support performing the tests in gross mode only. That precedent implies that in testing one component or variable, you attempt to hold all other components or variables constant. The revised proposal retains the limitation of performing the test using gross results (uncompensated).

In those codes where different device applications are sometimes gross and sometimes net, it will be necessary to specify using gross results, if the device has ATC capability. It is proposed to add the following text in the note paragraph specifying the repeatability test. "For devices equipped with an automatic temperature compensator, the test results shall be based on uncompensated (gross) volume, i.e. with the temperature compensator deactivated" (or equivalent wording). In the LPG/NH4 code this change renders the extra wording in T.3. unnecessary, i.e. that the tolerance does not apply to ATC.

2. Should the repeatability test be a normal test as presently presented in the Code? That is, is the test limited to flow rates within the range of normal tests? Note that the repeatability test now appears in the Normal Test section in every affected HB44 LMD Code, Sections 3.30, through 3.39. The table below shows the history of the related sections.

Code	Note Paragraph	Tolerance Paragraph
3.30. LMD	N.4.1.2. (Added 2001)	T.3. (Added 1992) (Amended 2001 and 2002)
3.31. VTM	N.4.1.2. (Added 2001)	T.3. (Added 1992) (Amended 2001 and 2002)
3.32. LPG/NH4	N.4.1.2. (Added 2001)	T.3. (Added 1992) (Amended 1997 and 2001)
3.33. Vapor	N.4.1.2. (Added 2002)	T.3. (Added 2002)
3.34. Cryogenic	N.5.1. (Added 2001)	T.4. (Added 2001)
3.35. Milk	N.4.1.1. (Added 2002)	T.3. (Added 2002)
3.36. Water	N.4.1.1. (Added 2002)	T.1.1. (Added 2002) (Amended 2010)
3.37. Mass Flow	N.6.1.1. (Added 2001)	T.3. (Amended 1992, 1994, and 2001)
3.38. CO_2	N.4.1.1. (Added 2002)	T.2.1. (Added 2002)
3.39. Hydrogen	N.6.1.1. (Tentative Code 2010)	T.3. (Tentative Code 2010)

Response to Issue 2.

Overwhelming support has emerged for the proposition that repeatability tests may be performed at any flow rate within the legitimate operating range of the device. To accomplish this, the Note paragraph on repeatability tests must be removed from the Normal Test section of each Code and placed in its own section. In the proposed wording below, the repeatability Note was simply moved to the next available number under Testing Procedures in each Code. For example, in 3.30. LMD Code, note N.4.1.2. is proposed to be renumbered N.4.6. This results in the sequence N.4.1. Normal tests, N.4.2. Special Tests, N.4.3. Money-Value Computation Tests, N.4.4. Pour and Drain Times, N.4.5. Temperature Correction on Wholesale Meters, and N.4.6. Repeatability Tests. NIST OWM has suggested inserting it after Special Tests and renumbering N.4.3. to N.4.5. Either way accomplishes the same end. Adding at the end of the list may cause less disruption.

However, removing repeatability from the special tests now leaves the issue of flow rates for conducting the test unstated. I suggest we need to add a statement to each Note as follows: "When conducting the tests, the flow rates shall be within the minimum and maximum discharge rates as marked by the manufacturer." However, some

This publication is available free of charge from: https://doi.org/10.6028/NIST.SP.1253

codes use different terminology and in, some cases, minimum and maximum discharge rates are not marked like RMFD's. For these cases I propose to add an additional statement regarding minimum discharge rates and maximum discharge rates as appropriate to that code.

3. If the test may only be performed as a normal test in Issue 2, how do we legitimize the NTEP policy of applying the tolerance to repeatability tests at special test flow rates? Based on the response to Issue 2, this will be a moot issue and can be dropped moving forward.

For full details on this issue, including the submitter's justification and recommendations and other background information, please see Appendix A, Page S&T – A59 in the S&T Committee's 2018 Interim Report.

Discussion:
Sector Chairman Michael Keilty introduced this item, after which Mrs. Tina Butcher (NIST OWM) provided an overview of the issue as outlined above at in the S&T Committee's Report. She also noted the following points:

- The General Code specifies that a device must be capable of repeating its indications within applicable tolerances under any condition of normal use.
- Most HB 44 measuring codes were modified to include a tighter tolerance for repeatability after inspectors reported finding metering systems that used the full range of the tolerance for multiple tests run under the same conditions. These metering systems were likely in need of repairs, but met the tolerance.
- Repeatability tolerances are based on 40% of the absolute value of the maintenance tolerance. Thus, testing is always based on the relative tolerance for the rate of flow at which the device is being tested. For example, for tests run at slower flow rates, most (though not all) metering systems are allowed a larger tolerance and the repeatability tolerance is based on that.
- There was no evidence in reviews of past NCWM S&T Committee reports that the current repeatability requirements were intended to be limited on only normal tests nor that the requirement was intentionally located under the "Normal Tests" section.
- Past Measuring Sector summaries in which the HB 44 requirements were discussed also do not reflect any intention to limit repeatability testing to only normal tests.

Discussion by the Sector included the following points:

- The tolerances currently specified in NIST HB 44 apply across all flow rates.
- A meter must meet accuracy requirements at any flow rate within the limitations marked on the meter.
- The proposed changes will not affect what is being done in NTEP. NTEP has been verifying meters across their entire rated range of flow since the program began.
- A meter needs to be capable of repeating its indications at any condition of normal use, provided it is within the marked flow range of the meter.
- For a device equipped with an automatic temperature compensating system (ATCS), the ATCS needs to be deactivated when conducting a repeatability test.

Decision:
The Sector made no decisions on this issue; however, the Sector confirmed that the current NTEP policy of conducting repeatability testing at all flow rates across the rated range of the meter is appropriate and a meter must be capable of meeting repeatability tolerances for repeated, consecutive tests at a given flow rate. Comments expressed general support of the proposed changes and indicated the recommendations are reasonable.

This publication is available free of charge from: https://doi.org/10.6028/NIST.SP.1253

13. S&T 2019 - New Proposal – Section 3.30 LMD Code - Airport Refueling Systems

Source:
G. Diane Lee and Tina Butcher (NIST OWM)

Purpose:
Modify the Liquid Measuring Devices Code to address self-service airport fueling dispensing systems equipped with a primary analog indicator and a separate card activated console with a printer that are used to fuel multiple tanks on aircrafts.

Item Under Consideration/Background:
See corresponding NCWM Form 15 in Appendix H to this Agenda.

Discussion:
Sector Chairman Michael Keilty introduced this item and Mrs. Tina Butcher (NIST OWM, submitter of the item) explained its background and origin. Mrs. Butcher noted that a number of airport refueling systems which were installed as part of a program to enhance air safety by providing additional fueling points. Unfortunately, weights and measures jurisdictions were not consulted prior to installation and, because installers were apparently unfamiliar with legal metrology requirements, these systems fail to meet requirements for agreement of indications. The Sector had limited discussion of this issue. Comments included the following:

Other retail motor-fuel systems are required to meet agreement of indications requirements. Exempting these systems is not fair and puts companies whose products meet the requirements at a competitive disadvantage.

Weights and measures agencies with such systems in their jurisdiction might consider low-/no-cost options to help ensure agreement requirements are met while preventing the installation of future systems that do not meet requirements.

Decision:
The Sector discussed the proposed item to address airport refuelers and agreed to offer the following suggestions/observations to assist the S&T Committee in its deliberations on this item.

- ***The Sector acknowledges this is proposed as a Developing Item; however, the Sector does not believe modifications to provide an exemption for requirements on agreement of indications to these systems are appropriate and this item should be withdrawn from the S&T Committee's agenda. The Sector views this as an enforcement issue.***
- ***Numerous other retail motor-fuel applications have been required to comply and have complied for many years with requirements for agreement of indications. To allow such exceptions would put manufacturers of retail motor-fuel systems which currently comply (and which compete with those used in airport refueling applications) at a competitive disadvantage. Additionally, the lack of agreement of indications could cause customer confusion (as has already been evidenced by the reported complaint) and possibly create a safety concern.***
- ***The regulatory agency should work with the community to educate them and help ensure future systems meet all HB 44 requirements.***
- ***There would seem to be some low-cost options which could be used by the regulatory jurisdiction for addressing these systems and ensure agreement requirements are met. For example, posting signage instructing the consumer/operator not to reset the indications during a delivery.***

This publication is available free of charge from: https://doi.org/10.6028/NIST.SP.1253

14. S&T 2019 – New Proposal – Section 3.30 LMD Code - Recognition of Diesel Exhaust Fluid (DEF) and Other Products

Source:
G. Diane Lee and Tina Butcher (NIST OWM)

Purpose:
Modify the Liquid Measuring Devices Code to adequately address requirements for retail liquid measuring devices that measure DEF and other products.

Item Under Consideration/Background:
See corresponding NCWM Form 15 in Appendix H to this Agenda.

Discussion:
Sector Chairman Michael Keilty introduced this item and Mrs. Tina Butcher (NIST OWM, submitter of the item) explained its background and origin noting that it was called to OWM's attention that the LMD Code does not adequately address DEF and may not adequately address other liquids. Discussion by the Sector included the following points:

- If the proposed deletion of "including liquid fuels and lubricants" is struck from the Application Section A.1. General, as shown below it seems that part A.1.(b) (which spells out specific product types for wholesale meter applications) is unnecessary.

  A.1. General. – This code applies to:

  (a) devices used for the measurement of liquids, ~~**including liquid fuels and lubricants,**~~ and

  (b) wholesale devices used for the measurement and delivery of agri-chemical liquids such as fertilizers, feeds, herbicides, pesticides, insecticides, fungicides, and defoliants.

  (Added 1985)

- There are other liquid types such as systems that dispense windshield washer fluid that are covered by the LMD code.
- The Sector agreed that the use of the term "including" in A.1.(a) makes it clear that the LMD Code is not limited to covering
- Multiple Sector members expressed discomfort with modifying the code to change "retail motor-fuel dispensers" to "retail devices."
- In past discussions over the years, NCWM S&T Committee has attempted to avoid creating "laundry lists" of products or applications. In this instance, however, the Sector preferred specifying DEF, not knowing what implications the broader reference to "retail devices" might create.
- No changes had been proposed to Paragraph S.1.2.1. Retail-Motor-Fuel Devices to address units for DEF systems. This may have been an oversight in the proposal.

Decision:
The Sector discussed the proposed changes to NIST HB 44 to address DEF and agreed to offer the following suggestions/observations to assist the S&T Committee in its deliberations on this item.

- ***The Sector acknowledged DEF measuring systems are covered under the Liquid-Measuring Devices Code as are other liquid-measuring systems such as those dispensing windshield washer fluid.***
- ***The current wording of A.1.(a) is not currently limiting, though changes might be made to make that clear. If the phrase "including liquid fuels and lubricants" is struck from the Application Section A.1., then A.1.(b) may become unnecessary and the Committee may wish to consider striking it.***

- ***The Sector acknowledged changes to HB 44 to better address DEF appear to be needed. Some Sector members recommend, rather than using the broad reference to "retail devices" (or a similar reference), that the modifications specifically reference "DEF" to avoid creating an unintentional conflict with other applications.***

15. S&T 2019 – New Proposal – Section 3.37. Mass Flow Meters Code – Location of Marking Information, RMFDs

Source:
Juana Williams (NIST OWM)

Purpose:
Extend the NIST Handbook 44 Mass Flow Meters Code provision allowing the use of a key or tool for accessing internal required markings for liquid retail motor-fuel dispensers to include retail motor-fuel dispensers delivering compressed gases.

Item Under Consideration/Background:
See corresponding NCWM Form 15 in Appendix H to this Agenda.

Discussion:
Sector Chairman Michael Keilty and Sector Technical Advisor Tina Butcher noted that Items 15, 16, and 17 on the Sector's agenda address S&T Committee agenda items that are largely "housekeeping" in nature and briefly described the purpose of each. These items are intended to clean up inconsistencies and errors in H44 and/or align requirements among various measuring codes.

Decision:
The Sector made no decisions on this issue, acknowledging this is primarily a housekeeping item on the S&T Committee's agenda intended to align requirements in the Mass Flow Meters (MFMs) Code with other measuring codes and afford MFMs with the same provisions for accessing G-S.1. Identification Information as other measuring systems.

16. S&T 2019 – New Proposal – Block – Mass Flow Meters Code; Hydrogen Gas Measuring Devices Code; and Electric Vehicle Refueling Code – Addition of Timeout Requirements

Source:
Juana Williams (NIST OWM)

Purpose:
To prevent the facilitation of fraud on a vehicle fueling system equipped with the capability for authorization of a transaction by a credit card, debit card, or cash.

Item Under Consideration/Background:
See corresponding NCWM Form 15 in Appendix H to this Agenda.

Discussion:
Sector Chairman Michael Keilty and Sector Technical Advisor Tina Butcher noted that Items 15, 16, and 17 on the Sector's agenda address S&T Committee agenda items that are largely "housekeeping" in nature and briefly described the purpose of each. These items are intended to clean up inconsistencies and errors in H44 and/or align requirements among various measuring codes.

This publication is available free of charge from: https://doi.org/10.6028/NIST.SP.1253

Decision:
The Sector made no decisions on this issue, acknowledging this is primarily a housekeeping item on the S&T Committee's agenda intended to align requirements in the Mass Flow Meters (MFMs) Code; Hydrogen Gas-Measuring Devices; and Electric Vehicle Fueling Systems Code with other measuring codes and include consistent requirements for "timeout" of credit card authorizations.

17. S&T 2019 – New Proposal – Section 3.37. Mass Flow Meters Code – Deletion of "GLE" and Addition of DGE Maximum Quantity Division

Source:
Juana Williams (NIST OWM)

Purpose:
Delete the reference to "gasoline liter equivalent (GLE)" since that term that was removed from all Mass Flow Meters Code requirements in 2016. Clarify and limit the maximum value of the quantity division for indicated and recorded deliveries in the diesel gallon equivalent (DGE) to an increment of 0.001.

Item Under Consideration/Background:
See corresponding NCWM Form 15 in Appendix H to this Agenda.

Discussion:
Sector Chairman Michael Keilty and Sector Technical Advisor Tina Butcher noted that Items 15, 16, and 17 on the Sector's agenda address S&T Committee agenda items that are largely "housekeeping" in nature and briefly described the purpose of each. These items are intended to clean up inconsistencies and errors in H44 and align requirements among various measuring codes.

Decision:
The Sector made no decisions on this issue, acknowledging this is primarily a housekeeping item on the S&T Committee's agenda intended address points that were overlooked when the new unit of "DGE" was added in 2016. The proposal referenced in this agenda item, Item 17, is intended to eliminate a reference to "GLE" (which was inadvertently omitted when the term was deleted from HB44 in 2016) and to specify maximum quantity divisions for DGE consistent with those for other equivalent units (the addition of which was overlooked when this new term was added).

18. S&T 2019 – New Proposal – Section 3.40 Electric Vehicle Fueling Systems Code - Definition - Power Factor

Source:
Tina Butcher (NIST OWM)

Purpose:
To simplify the definition for "Power Factor" currently included in NIST Handbook 44 (HB44) Section 3.40. Electric Vehicle Fueling Systems – Tentative Code. To align the current HB 44 definition with a definition included in a proposal to adopt a "Method of Sale" requirement for electric watt hour meters that is currently under consideration by the NCWM Laws & Regulations Committee.

Item Under Consideration/Background:
See corresponding NCWM Form 15 in Appendix H to this Agenda.

Discussion/Decision:
Sector Chairman Michael Keilty and Sector Technical Advisor Tina Butcher pointed out this item is intended to align the definition for "power factor" in HB 44 for Electric Vehicle Fueling Systems with one being proposed for

This publication is available free of charge from: https://doi.org/10.6028/NIST.SP.1253

inclusion in NIST HB 130 for sales of electricity through electric watthour meter. Given the definition in the L&R proposal was developed by the NIST USNWG on Electric Vehicle Fueling and Submetering, the proposal on the S&T Committee's agenda is viewed as largely "housekeeping." The Sector did not discuss this proposal beyond acknowledging its purpose and made no decision on this item.

19. Meeting Location and Date of 2019 Measuring Sector Meeting

Background:
This Item is included on the Sector's agenda to apprise Sector members of arrangements for the 2019 Sector meeting.

At its 2017 meeting, the Sector concluded most Sector members prefer not to hold the meeting in conjunction with a regional association meeting and, in particular, want to avoid holding it over a weekend. The Sector identified the following possible destinations for future meetings to recommend to the NCWM BOD:

- Atlanta, Georgia
- Baltimore/Annapolis, Maryland
- Columbus, Ohio
- Denver, Colorado (different hotel than before)
- Fort Wayne, Indiana
- Indianapolis, Indiana
- Jacksonville, Florida
- Orlando, Florida

In June 2018, Mr. Jim Truex (NTEP Director) polled the Sector on potential locations and dates for the 2019 Sector Meeting. Based upon the results of that poll, the meeting will be held September 24 – 26, 2019 in Denver, Colorado as follows:

Meeting Location:

Holiday Inn & Suites
6900 Tower Road
Denver, Colorado 80249
(303) 574-1300

Dates:

Tuesday, September 24, 2019: 8 am – 5 pm
Wednesday, September 25, 2019: 8 am – 5 pm
Thursday, September 26, 2019: 8 am – 5 pm

Final meeting and lodging details will be provided closer to the 2019 meeting.

Discussion:
Mr. Jim Truex (NTEP Director) reviewed the date and location selected for the 2019 NTEP Measuring Sector Meeting and noted the following:

- The 2019 meeting will be held jointly with the Software Sector.
- The dates and location for the meeting were selected based on results of a poll of Measuring Sector members.

This publication is available free of charge from: https://doi.org/10.6028/NIST.SP.1253

This publication is available free of charge from: https://doi.org/10.6028/NIST.SP.1253

- As of the current time, there will NOT be a separate NTEP Measuring Laboratories meeting held in conjunction with the Sector meeting. The NTEP Laboratories are holding a special meeting in the spring to review and receive hands-on training regarding the use of master meters in CNG testing.
- There is a possibility that the Measuring Sector will NOT meet with the Software Sector on Thursday, September 26, 2018.
- The Software Sector will be proposing they assume responsibilities for all areas of NCWM Pub 14 that address software. This includes relevant sections of the Liquid-Measuring Devices Checklist and other measuring-related checklists. The timeline and scope of this proposal has not yet been identified.
- The Measuring Sector has not accepted a lot of what the Software Sector has proposed for inclusion in Pub 14. The BOD/NTEP may take over certain sections and assign responsi9bility to the Software Sector.

Decision:
The Sector was not asked to make any decisions on this item. The item was included as an information item on the Sector's agenda to apprise members of the dates and location of the 2019 Sector meeting and share information regarding a proposal being considered by the NCWM BOD for the Software Sector to assume responsibility for all portions of NCWM Pub 14 addressing software related requirements and issues.

Agenda Items Added During the Sector Meeting:

The following items were added to the agenda and discussed by the Sector after the Sector had completed its review of previously planned agenda items.

20. Magnetic Flow Meters

Source:
NTEP Measuring Laboratories

Item Under Consideration/Background:
This item was added to the Sector's agenda during the meeting after the Sector completed its review of scheduled agenda items. The purpose of this item was to provide guidance to the NTEP laboratories and manufacturers regarding procedures and policies to apply during testing of magnetic flow meters.

During the NTEP Evaluating Laboratories meeting just prior to the 2018 NTEP Measuring Sector Meeting, one of the laboratories reported receiving an assignment for a magnetic flow meter for measuring milk. The NTEP Evaluating Laboratories discussed the need for guidance on test procedures and permanence criteria for these meters. The laboratories suggest adding to the existing NTEP criteria for positive displacement meter. The laboratories would have preferred to use the criteria for mass flow meters since that criteria seems more broadly applicable; however, the criteria for MFMs reference a 10:1 turndown ratio for the minimum to maximum rated flow.

Discussion:
To address magnetic flow meters, the NTEP Evaluation Laboratories propose modifications to NCWM Publication 14, Part D Initial Evaluation and Permanence Tests for Wholesale Positive Displacement (PD) Meters found on Page LMD-115 in the Field Evaluation and Permanence Tests for Metering Systems portion of the Liquid-Measuring Devices Checklist. The Sector reviewed a marked-up copy of Part D with the laboratories' recommendations. Discussion points included the following:

- NTEP might consider that OIML R117 does not specify endurance tests for these meters.

This publication is available free of charge from: https://doi.org/10.6028/NIST.SP.1253

- One of the evaluating laboratories reported having tested mass flow meters and sonic meters and finding failures after the permanence period. Without additional experience to demonstrate otherwise, this lab and others are not in favor of eliminating the permanence tests.
- For meters measuring water, there is a deviation between American Water Works Association standards and NIST Handbook 44.
- One laboratory reported having observed some water meters passing the permanence tests, but others failing, particularly some of the ultrasonic meters.
- Starting with the criteria in Section D seems a reasonable approach for developing criteria for magnetic flow meters.
- The Sector reviewed the NTEP Laboratories' proposed changes to Part D Initial Evaluation and Permanence Tests for Wholesale Positive Displacement (PD) Meters found on Page LMD-115 in the Field Evaluation and Permanence Tests for Metering Systems portion of the Liquid-Measuring Devices Checklist.
- The Sector agreed it is better to create a new section in this portion of the checklist to address magnetic flow meters and ultrasonic meters.

Decision:
The Sector recommends the following new section be added to the Field Evaluation and Permanence Tests for Metering Systems portion of the Liquid-Measuring Devices Checklist to address magnetic flow meters and ultrasonic meters. The Sector recommends this section be lettered "M;" however, leaves it to the discretion of the NTEP Director regarding the most appropriate order in which to place this section in the checklist.

M. Initial Evaluation and Permanence Tests for Magnetic Flow Meters and Ultrasonic Meters (Other Than Vehicle-Mounted and Retail-Motor-Fuel Applications)

The following tests are considered to be appropriate for magnetic flow meters and ultrasonic metering systems:

1. For wholesale devices, four test drafts at each of five flow rates.

   1.1. "Special" tests shall include a test at or slightly above the slower of the following rates:

      1.1.1. 20% of the marked maximum discharge rate; or,

      1.1.2. The minimum discharge rate marked on the device.

2. For retail devices:

   2.1. The minimum number of tests for the meter will include the following:

   - Five tests at the fast flow rate
   - Three tests at a midrange flow rate
   - Five tests at the slow flow rate

3. The meters must perform within acceptance tolerance.

4. Repeatability – Tests for repeatability shall include a minimum of three consecutive test drafts of approximately the same size and be conducted under controlled conditions where variations in factors, such as temperature, pressure, and flow rate, are reduced to the extent that they will not affect the results obtained.

This publication is available free of charge from: https://doi.org/10.6028/NIST.SP.1253

The range of the test results for the flow rate shall not exceed 40% of the absolute value of the maintenance tolerance. The results of each test shall be within the applicable tolerance. This tolerance does not apply to the test of the automatic temperature compensating system.

5. In no case shall testing be performed at a flow rate less than the minimum discharge rate marked on the device.

6. Only one meter is required for the initial test, after which the meter will be reevaluated for permanence. The minimum throughput criterion for these meters is the maximum rated flow in units per minute x 2000.

7. Following the period of use, the tests listed above are to be repeated. All results within the range of flow rates to be included on the Certificate of Conformance (CC) must be within the applicable tolerances. Extended flow range testing performed at the manufacturer's discretion may be included on the CC provided the results are within the acceptable tolerances.

21. Vapor Elimination on LPG Retail Motor-Fuel Dispensers

Source:
Mr. Robin Parsons (Parafour Innovations)

Item Under Consideration/Background:
This item was added to the Sector's agenda during the meeting after the Sector completed its review of scheduled agenda items. There are retail motor-fuel dispensers dispensing LPG which utilize mass flow meters. Since they use MFMs, these devices are covered under the MFM Code rather than the LPG & Anhydrous Ammonia Liquid-Measuring Devices Code. The submitter is encountering systems in which a vapor eliminator is not being included in these systems. He questioned whether or not a physical vapor eliminator needs to be included; if there are other means that are actually effective; and how does a service company or regulator evaluate the effectiveness of a system (either with a vapor eliminator or with "other effective means") to eliminate vapor.

Discussion:
Discussion points included the following:

- There is a difference between requirements for air/vapor elimination in Section 3.32. LPG & NH3 LMD Code and Section 3.37. MFM Code. The LPG Code specifies provisions must be made to prevent the "passage" of air/vapor through the meter; the MFM code specifies that provision must be made to prevent "measurement" of air/vapor.
- Most measuring codes recognize that "other effective means" can be provided than a conventional air/vapor eliminator. Examples of these other means are documented in past NCWM S&T Committee reports. In such cases the task of verifying that either option is "effective" falls to the regulator.
- There is a test procedure to verify the effectiveness of an air eliminator or "other effective means" for some types of devices, such as that used when testing a vehicle-tank meter and conducting a product depletion test.
- There isn't always a practical way to verify the effectiveness of an air eliminator or "other effective means" (particularly for products such as LPG which are under pressure) and/or there are no clear guidelines for officials to follow in validating these alternatives.
- Parafour Innovations conducts a test of an air eliminator during type evaluations.
- Current NTEP test procedures and procedures recommended in NIST Examination Procedure Outlines do not include a recommended test.

- NIST is open to incorporating such a test into the EPOs if the procedure is vetted through groups such as the Measuring Sector, NTEP Evaluating Laboratories, and/or others who can provide input and expertise and the community can agree upon the method.

Decision:
The Sector reached no decisions on this issue. The NTEP Director noted that, if this issue involves a concern about a competitor's product complying/not complying with the requirements, this should be submitted to the NTEP Director to investigate.

22. Inclusion of Items on the Sector's Agenda

Source:
Sector Chairman Michael Keilty (Endress+Hauser Flowtec) and Sector Technical Advisor Tina Butcher (NIST OWM)

Item Under Consideration/Background:
This item was added to the Sector's agenda during the meeting after the Sector completed its review of scheduled agenda items. Sector Chairman Michael Keilty, introduced the item, noting the intent is to clarify the process for submitting items to the Sector's Agenda and noted the following:

- Items are typically submitted through the regional weights and measures associations by submitted a "Form 15" to the NCWM.
- Items are designated with a status of Developing, Information, Assigned, Voting, or Withdrawn by the NCWM S&T Committee at the January NCWM Interim Meeting.
- For items designated with a "D," the Committee will generally not take comments on the item from other than the submitter. Some have expressed concerns about not being able to provide input on Developing items while they are under development.
- The protocol for taking comments may be reviewed by the NCWM BOD at an upcoming meeting.
- Submitters can select the region(s) to which the item is to be submitted.
- Submitters may not want an item to be reviewed by a Sector prior to having it viewed by one or more regional associations.
- A submitter owns the item and should have the right to make its first presentation to the community. The submitter needs to identify where they want to present the item and how to move it forward.
- A submitter may want to limit where an item is first discussed, particularly if the submitter wants to be present to provide history on the issue and respond to questions.
- The form for submitting items to the Sector's agenda is a bit different from the Form 15 and doesn't include any reference to regions.

Discussion:
Discussion points and comments included the following:

- Prior to including a new item submitted via a Form 15 on the Sector's agenda, the submitter should be specifically asked if it is desirable to do so.
- The Sector's agenda has historically included items which are on the current S&T Committee Agenda that may be of relevance to Sector members or for which Sector members' expertise may be of assistance to the S&T Committee. These items were relegated to an "As Time Permits" section of the agenda in recognition that the charge of the Sector is to address NTEP-related issues, not develop HB 44 issues. Segregating the agenda in this way allowed for the Sector to address its business and, should time permit, address additional items; Sector members who did not want to spend time reviewing these items could choose to leave the

This publication is available free of charge from: https://doi.org/10.6028/NIST.SP.1253

meeting at the conclusion of the Sector's business. This practice also alerted Sector members to items with possible impact to their organizations.

- Does the Sector still want an "As Time Permits" section of the agenda?
- Rather than including all S&T items that are possibly relevant to the Sector on the Sector Agenda, only items for which the S&T Committee specifically asks for assistance should be included.
- Some Sector members expressed appreciation of hearing about relevant S&T items and discussing them. The process is valuable in helping members understand an item and makes them more aware of issues that might impact their organizations.
- Sector members acknowledged that the S&T Committee values the input from the Sector and this also provides a service to the submitter in helping to fully vet a proposal.
- Reviewing a proposal as early as possible is helpful and will provide input to the submitter that can assist in the item's development. Early review may also prevent delays which might occur if the S&T Committee asks for Sector review upon receiving the item for the first time.
- The expectation in terms of confidentiality is unclear. At some point, the submitter should have an expectation that an item is a "public" item.
- Some believe it's no longer confidential once it's submitted to the NCWM.

Decision:
The Sector agreed to continue including an "As Time Permits" section on its agenda. The Sector agreed that having the opportunity to review relevant items on the S&T Agenda is beneficial when time permits. Items from the S&T Committee Agenda which are "carryover items" are to be included on the Sector's Agenda only if the S&T Committee specifically requests the Sector's input on the item. For newly submitted items that have not yet been reviewed by the S&T Committee at the national level, the submitter must be asked whether to include the item on the Sector's agenda or makes a specific request to do so.

This publication is available free of charge from: https://doi.org/10.6028/NIST.SP.1253

This publication is available free of charge from: https://doi.org/10.6028/NIST.SP.1253

Appendix A
to the September 2018 NTEP Measuring Sector Summary

DEF - Changes Adopted to the Family of Products Table in NCWM Publication 14

Via Email Ballot to the Sector to Recognize Diesel Exhaust Fluid (DEF).
(11/11/17 Email from Sector Chairman, Michael Keilty)

At its October 2017 Meeting, the NTEP Measuring Sector agreed to consider proposed additions to the Family of Products Table in NCWM Publication 14 to recognize Diesel Exhaust Fluid (DEF). The Sector agreed a small group would develop proposed changes and circulate the proposal to the Sector for review and balloting. Changes were proposed for each meter technology in the table, including:

- Mass Meter
- Magnetic Flow Meter
- Positive Displacement Flow Meter
- Turbine Flow Meter

Additionally, an addition was proposed to the "Product Table Category Table Category Abbreviations" to recognize "DEF."

In a series of two letter ballots, concluding in November 2017, the Sector adopted the proposed changes shown in bold, underlined text highlighted in yellow in the tables below. For ease of reference, changes are shown for each technology in a separate table. In the interest of brevity, only a couple of line items of the existing table that appear immediately before and after the proposed additions are shown.

Mass Meter
Product Category and Test Requirements

Test B

To cover a range of the following products, test with one product having a low specific gravity and test with a second product having a high specific gravity. The Certificate of Conformance will cover all products in all product categories listed in the table under Test B within the specific gravity range tested.

- Test B does not apply to product categories of liquefied gases, compressed liquids, cryogenic liquids or heated products.

Note: Product categories under Test B were formerly referred to collectively as "Normal Liquids."

Typical Products	Specific Gravity[2] (60 °F)	Product Category
…	…	…
N-P-K Solutions	1.2 – 1.4	Fert
Urea	**1.3**	Fert
Diesel exhaust fluid	**1.08 -1.18**	**DEF**
6 Oil (#5, #6)	0.9	FL&O

Asphalt		FL&O
…	…	…

Magnetic Flow Meter Product Category and Test Requirements		
Test D To obtain coverage for a product category, test with one product in the product category. The Certificate of Conformance will cover all products in the category. • Test D does not apply to product categories of pure alcohols, pure glycol, pure water, solvents chlorinated, solvents general, fuels, lubricants, industrial and food grade liquid oils. • Test D does not apply to product categories of liquefied gases, compressed liquids or heated products.		
Typical Products	**Conductivity micro Siemens/centimeter**	**Product Category**
…	…	…
N-P-K Solutions		Fert
Urea	5000	Fert
Diesel exhaust fluid	**2000 – 5000**	**DEF**
Liquid Molasses	300	Liq. Feed
Molasses Plus Phos. Acid and/or Urea (TreaChle)		Liq. Feed
…	…	…

Positive Displacement Meter Product Category and Test Requirements	
Test C To cover a range of products within each product category, test with one product having a low viscosity and test with a second product having a high viscosity within each category. The Certificate of Conformance will cover all products in the product category within the viscosity range tested.	
Test C **Product Category: Clear Liquid Fertilizers (Fert) and DEF**	
Typical Products	**Reference Viscosity[1] (60 °F) centipoise (cP)**
…	…
Clear Liquid Fertilizer	31 – 110
N-P-K Solution	
Urea	**1.7 – 1.9**
Diesel exhaust fluid	**1.2 – 1.7**
…	…

This publication is available free of charge from: https://doi.org/10.6028/NIST.SP.1253

Turbine Flow Meter Product Category and Test Requirements	
Test A The following products must be individually tested and noted on the Certificate of Conformance.	
Typical Products	**Product Category**
...	…
Nitrogen Solution	Fert
N-P-K Solutions	Fert
Urea	Fert
Diesel exhaust fluid	**DEF**
Bicep	Flow
Broadstrike	Flow
…	…

Product Category Table – Category Abbreviations			
Abbreviation	**Product Category**	**Abbreviation**	**Product Category**
Alc Gly	Alcohols, Glycols and Water Mixes Thereof	Fert	Fertilizers
CC-A	Crop Chemicals (Type A)	FL&O	Fuels, Lubricants, Industrial and Food Grade Liquid Oils
CC-B	Crop Chemicals (Type B)	Flow	Flowables
CC-C	Crop Chemicals (Type C)	Heated	Heated Products (Above 50 °C)
CC-D	Crop Chemicals (Type D)	Liq Feed	Liquid Feeds
Chem	Chemicals	Liq CO2	Liquid Carbon Dioxide
Comp gas	Compressed Gases	Solv Chl	Solvents Chlorinated
Comp H2	Compressed Hydrogen Gas	Solv Gen	Solvents General
Comp liq	Compressed Liquids (Fuels and Refrigerants, NH_3)	Sus Fert	Suspension Fertilizers
Cryo LNG	Cryogenic Liquids and Liquefied Natural Gas	Water	Water
DEF	**Diesel Exhaust Fluid**		

Note: The Typical Products listed in this table are not limiting or all-inclusive; there may be other products and product trade names, which fall into a product family. Water and a product such as stoddard solvent or mineral spirits may be used as test products in the fuels, lubricants, industrial, and food- grade liquid oils product family.

This publication is available free of charge from: https://doi.org/10.6028/NIST.SP.1253

This publication is available free of charge from: https://doi.org/10.6028/NIST.SP.1253

THIS PAGE INTENTIONALLY LEFT BLANK

This publication is available free of charge from: https://doi.org/10.6028/NIST.SP.1253

Appendix B
to the September 2018 NTEP Measuring Sector Summary

Manifold Flush Systems – Proposed Changes to NCWM Publication 14 to Reflect Changes Adopted by the NCWM in July 2018

The Sector is asked to consider recommending modifications to NCWM Publication 14 to correspond with the changes to in July 2018 to the Vehicle-Tank Meters Code in NIST Handbook 44 relative to "manifold flush systems." For reference, see the block of items under NCWM Committee S&T Agenda Item Block 1, including Items GEN-1 (which was withdrawn from the S&T Agenda) and VTM-1.

Changes are proposed (as shown further below in highlighted, marked text) in the following sections of the Liquid-Measuring Devices Checklist and Test Procedures:

- **Vehicle-Tank Meters** – Code References: Paragraphs S.3.1. Diversion of Measured Liquid & S.3.1.1. Clearing the Discharge Hose, Page LMD-61

---

25. Discharge Lines and Discharge Valves

Code Reference: S.3.1. Diversion of Measured Liquid

~~**Except on equipment used only for fueling aircraft, n**~~**N**o means shall be provided ~~**to allow**~~ **by which** any measured liquid ~~**to**~~ **can** be diverted from the measuring chamber or from the discharge line. However, two or more delivery outlets may be installed if means are provided to ensure that liquid can flow from only one outlet at a time and the setting for the direction of flow is conspicuously and definitely indicated. **This paragraph does not apply to the following:**

1) **Equipment used exclusively for fueling aircraft.**

2) **Multiple-product, single-discharge hose metering systems that are equipped with systems designed to flush the discharge hose, provided the flushing system complies with the provisions of paragraph S.3.1.1. Means for Clearing the Discharge Hose.**

Is the equipment used only to fuel aircraft? ☐ Yes ☐ No ☐ N/A

If "yes" skip to next Code Reference. ☐ **Yes** ☐ **No** ☐ **N/A**

Is the application for the metering system intended to be for multiple-product, single-discharge hose metering systems that will include systems designed to flush the discharge hose?

If "yes" skip to next Code Reference.

t shall not be possible to divert measured liquid from the measuring chamber or the discharge line. ☐ Yes ☐ No ☐ N/A

If two or more delivery outlets are installed, then liquid shall flow from only one outlet at a time and the direction of flow shall be conspicuously indicated. ☐ Yes ☐ No ☐ N/A

Code Reference S.3.1.1. Means for Clearing the Discharge Hose.

Metering systems may be equipped with a system specifically designed to

This publication is available free of charge from: https://doi.org/10.6028/NIST.SP.1253

facilitate clearing of the discharge hose prior to delivery to avoid product contamination. In such systems, a valve to temporarily divert product from the measuring chamber of the meter to a storage tank shall be installed only under specific conditions. For metering systems which are interfaced with such flushing systems, the provisions paragraph S.3.1.1. Means for Clearing the Discharge Hose must be satisfied. This must be specified on the CC when this option is listed.

If the system under evaluation is equipped with such a flush system, verify that the interface with the metering system operates properly; does not affect the operation of the metering system; and does not facilitate fraud.

Verify the metering system and flush system meets the following conditions:

(a) the discharge hose remains of the wet hose type;	☐ Yes ☐ No ☐ N/A
(b) the valve and associated piping are approved by the weights and measures authority having jurisdiction over the device prior to commercial use;	☐ Yes ☐ No ☐ N/A
(c) the valve is permanently marked with its purpose (e.g., flush valve);	☐ Yes ☐ No ☐ N/A
(d) the valve is installed in a conspicuous manner and as far from the hose reel as practical;	☐ Yes ☐ No ☐ N/A
(e) the system clearly and automatically indicates the direction of product flow during operation of the flush system;	☐ Yes ☐ No ☐ N/A
(f) clear means, such as an indicator light or audible alarm, is used to identify when the valve is in use; and	☐ Yes ☐ No ☐ N/A
(g) no hoses or piping are connected to the inlet when it is not in use.	☐ Yes ☐ No ☐ N/A

This publication is available free of charge from: https://doi.org/10.6028/NIST.SP.1253

Appendix C
to the September 2018 NTEP Measuring Sector Summary

Vapor Elimination
Proposed Changes to NCWM Publication 14
to Reflect Changes Adopted by the NCWM in July 2018

The Sector is asked to consider recommending modifications to NCWM Publication 14 to correspond with the changes made in July 2018 to the LPG & Anhydrous Ammonia Liquid-Measuring Devices Code; Cryogenic Liquid-Measuring Devices Code; and Carbon Dioxide Liquid-Measuring Devices Code in NIST Handbook 44 relative to air/vapor elimination. For reference, see the block of items under NCWM Committee S&T Agenda Item Block 6, including Items LPG-1, CLM-3, and CDL-3.

Changes are proposed to Pub 14 (as shown further below in highlighted, marked text) in the following sections of the Liquid-Measuring Devices Checklist and Test Procedures:

- **Common Specific Code Requirements –** Code Reference: S.2.1. Air/Vapor Elimination (LPG S.2.1.), Page LMD-32
- **Wholesale and Loading Rack Meters** – Code Reference S.2.1.1. Air/Vapor Elimination, Page LMD-54
- **Mass Flow Meters —** Code Reference: S.3.3. Air/Vapor Elimination, Page LMD-78

Changes are proposed (as shown further below in highlighted, marked text) in the following sections of the Cryogenic Liquid-Measuring Devices Checklist:

- **Common Specific Code Requirements –** Code Reference S.2.1. Air/Vapor Elimination, Page CLMD-12
- **Common Specific Code Requirements –** Code Reference: S.2.1. Air/Vapor Elimination on Wholesale and Loading Rack Metering Systems, Page CLMD-14

Liquid-Measuring Devices Checklist	
Checklist & Test Procedures for Common Specific Code Requirements - Page LMD-32	
Code Reference: S.2.1. Air/Vapor Elimination (LPG S.2.1.) If air/vapor enters a measuring system or the product changes into the vapor state as it passes through the system, then the system must be equipped with an effective air/vapor eliminator or other automatic means to prevent the air/vapor from passing through the meter. To prevent the vapor eliminator vent lines from being pinched closed and re-opened without being detected, the vent lines shall be made of appropriate non-collapsible material. If the system is designed such that air/vapor will not enter the system, then an air/vapor eliminator is not required. One example is when a product is being pumped from the bottom of a tank and a low-level detector in the tank shuts off the pump before the liquid level gets to the point where air could enter the system.	
59.1. The metering system is equipped with an effective air/vapor eliminator.	☐ Yes ☐ No ☐ N/A
59.2. Other effective, automatic means are provided to prevent air/vapor from passing through the system. Describe the means provided and list this information on the Certificate of Conformance. _____ _____	☐ Yes ☐ No ☐ N/A
59.3. The vent lines are made of appropriate non-collapsible material to prevent the lines from being pinched closed and re-opened without being detected.	☐ Yes ☐ No ☐ N/A

This publication is available free of charge from: https://doi.org/10.6028/NIST.SP.1253

Checklist & Test Procedures for Wholesale and Loading-Rack Meters - Page LMD-54

Code Reference: S.2.1.1. Air/Vapor Elimination on Loading Rack Metering Systems
(Remaining language for this section is the same as in the code reference S.2.1. above.)

Checklist & Test Procedures for Mass Flow Meters - Page LMD-78

Code Reference: S.3.3. Air/Vapor Elimination
If air/vapor enters a measuring system or the product changes into the vapor state as it passes through the system, then the system must be equipped with an effective air/vapor eliminator or other automatic means to prevent the air/vapor from being measured by the meter. To prevent **air/**vapor eliminator vent lines from being pinched close and re-opened without being detected, the vent lines shall be made of appropriate non-collapsible material. If the system is designed such that air/vapor will not enter the system, then an air/vapor eliminator is not required. One example is when a product is being pumped from the bottom of a tank and a low-level detector in the tank shuts off the pump before the liquid level gets to the point where air could enter the system.

(Remaining language for this section is the same as in the code reference S.2.1. above with the exception of the reference to preventing air/vapor from being "measured" by the meter rather than "passing through the meter.)

Cryogenic Liquid-Measuring Devices Checklist

Checklist & Test Procedures for Common Specific Code Requirements - Page CLMD-12

Code Reference: S.2.1. Air/Vapor Elimination ~~(LPG Code Reference S.2.1.)~~
Note: *Only applies to product metered in liquid state.*

If air**/vapor** enters **~~through~~** a metering system or the product changes into **the** vapor **state** as it passes through the system, then **~~it~~ the system** must be equipped with **an effective air/**vapor eliminator **or other automatic means** to **~~remove the air or vapor before it passes~~ prevent the passage of air/vapor** through the meter. To prevent **~~the~~ air/**vapor **~~return~~ eliminator vent** lines from being pinched closed and reopened without being detected, the vent lines shall be made of **~~metal tubing or other rigid material~~ appropriate non-collapsible material**. If the system is designed such that **~~air or vapor~~ air/vapor** will not enter the system, then a**n air/**vapor eliminator is not required. One example is when a product is being pumped from the bottom of a tank and a low-level detector in the tank shuts off the pump before the liquid level gets to the point where air could enter the system.

1.1.	The metering system is equipped with an effective **air/**vapor eliminator.	☐ Yes ☐ No ☐ N/A
1.2.	**Other effective, automatic means are provided to prevent air/vapor from passing through the system. Describe the means provided and list this information on the Certificate of Conformance.** _____ _____	**☐ Yes ☐ No ☐ N/A**
1.3.	The vent lines are made of appropriate non-collapsible material to prevent the lines from being pinched closed and re-opened without being detected.	☐ Yes ☐ No ☐ N/A

Checklist & Test Procedures for Common Specific Code Requirements - Page CLMD-14	
Code Reference: S.2.1. Air/Vapor Elimination on Wholesale and Loading Rack Metering Systems	
~~**8.1.**~~ A measuring system shall be equipped with an effective **air/**vapor eliminator or other effective means to prevent the measurement of vapor that will cause errors in excess of the applicable tolerances. *See NIST Handbook 44, Cryogenic Liquid-Measuring Devices, Section T.*	~~☐ Yes ☐ No ☐ N/A~~
8.1. The metering system is equipped with an effective air/vapor eliminator.	**☐ Yes ☐ No ☐ N/A**
8.2. Other effective, automatic means are provided to prevent air/vapor from passing through the system. Describe the means provided and list this information on the Certificate of Conformance.	**☐ Yes ☐ No ☐ N/A**
8.3. The vent lines are made of appropriate non-collapsible material to prevent the lines from being pinched closed and re-opened without being detected.	**☐ Yes ☐ No ☐ N/A**

This publication is available free of charge from: https://doi.org/10.6028/NIST.SP.1253

This publication is available free of charge from: https://doi.org/10.6028/NIST.SP.1253

THIS PAGE INTENTIONALLY LEFT BLANK

This publication is available free of charge from: https://doi.org/10.6028/NIST.SP.1253

Appendix D
to the September 2018 NTEP Measuring Sector Summary

Recorded Representations – Retail Motor-Fuel Dispensers (RMFDs)
Proposed Changes to NCWM Publication 14
to Reflect Changes Adopted by the NCWM in July 2018

The Sector is asked to recommending modifications to NCWM Publication 14 to reflect the changes to the Liquid-Measuring Devices Code in NIST Handbook 44 relative to including information to identify the dispenser used in a transaction on recorded representations issued by retail motor-fuel dispensers. For reference, see the Item LMD-2 on the NCWM S&T Committees 2018 Agenda.

Changes are proposed to Pub 14 (as shown further below in highlighted, marked text) in the following sections of the Liquid-Measuring Devices Checklist and Test Procedures:

- **Retail Motor-Fuel Dispensers –** Code Reference: S.1.6.7. Recorded Representations and S.1.6.8. Recorded Representations for Transactions Where a Post-Delivery Discount(s) is Provided, Page LMD-39

- **Cash-Activated Retail Motor-Fuel Dispensers –** Code Reference: S.1.6.7. Recorded Representations and S.1.6.8. Recorded Representations for Transactions Where a Post-Delivery Discount(s) is Provided, Page LMD-50

- **Card-Activated Retail Motor-Fuel Dispensers -** Code Reference: S.1.6.7. Recorded Representations and S.1.6.8. Recorded Representations for Transactions Where a Post-Delivery Discount(s) is Provided, Page LMD-84

Changes are proposed to Pub 14 (as shown further below in highlighted, marked text) in the following sections of the Electronic Cash Registers Interfaced with Retail Motor-Fuel Dispenser, Console Controller, Point-of-Sale System Software Checklists and Test Procedures:

- Code Reference: S.1.6.7. Recorded Representations and S.1.6.8. Recorded Representations for Transactions Where a Post-Delivery Discount(s) is Provided, Page ECRD-6

Note: Individual checklist numbering may not match Publication 14 numbering due to automatic numbering features of MS Word. Page Numbers and beginning checklist item numbers are included in each section for reference.

Checklist and Test Procedures for Retail Motor-Fuel Dispensers Page LMD-39, Beginning with Checklist Item Numbered 7.41.

Code References: S.1.6.7. Recorded Representations; and S.1.6.8. Recorded Representations for Transactions Where a Post-Delivery Discount(s) is Provided.

Except for fleet sales and other price contract sales, for transactions conducted with point-of-sale systems or devices activated by credit cards, debit cards, or cash, a printed receipt containing information about the transaction shall be available to the customer as outlined in the following items. A printed receipt must always be available to the customer upon request and printing of the receipt may be initiated at the option of the customer. In addition, some systems may be equipped with the capability to issue an electronic receipt; for those systems, the customer may be given the option to receive the receipt electronically (e.g., via cell phone, computer, etc.). See also NCWM Publication 14, Code Reference: G-S.5.6. Recorded Representations.

Device capabilities: ☐ Printed Receipt ☐ Electronic Receipt

7.41. The system must provide a receipt to be made available to the customer at the completion of the transaction through either:	
7.44.1. a built-in recording element OR	☐ Yes ☐ No ☐ N/A
7.44.2. a separate recording element that is part of the system	☐ Yes ☐ No ☐ N/A
7.42. Except for transactions where a post-delivery discount is provided, the customer receipt must contain the following information:	~~☐ Yes ☐ No ☐ N/A~~
7.42.1. ~~T~~the total volume of the delivery;	☐ Yes ☐ No ☐ N/A
7.42.2. ~~T~~the unit price;	☐ Yes ☐ No ☐ N/A
7.42.3. ~~T~~the total computed price; ~~and~~	☐ Yes ☐ No ☐ N/A
7.42.4. ~~T~~the product identity by name, symbol, abbreviation, or code number**; and**	☐ Yes ☐ No ☐ N/A
7.42.5. the dispenser designation by either and alpha or numerical description (effective as of January 1, 2021).	**☐ Yes ☐ No ☐ N/A**
7.43. Where a post-delivery discount(s) is applied, the sales receipt must provide:	~~☐ Yes ☐ No ☐ N/A~~
7.43.1. the product identity by name, symbol, abbreviation, or code number;	☐ Yes ☐ No ☐ N/A
7.43.2. the total quantity, unit price, and total computed price that were displayed on the dispenser at the end of the delivery prior to any post-delivery discount(s);	☐ Yes ☐ No ☐ N/A
7.43.3. an itemization of the post-delivery discounts to the unit price; ~~and~~	☐ Yes ☐ No ☐ N/A
7.43.4. the final total price of each fuel sale after all post-delivery discounts are applied**; and**	**☐ Yes ☐ No ☐ N/A**
7.43.5. the dispenser designation by either and alpha or numerical description (effective as of January 1, 2021).	**☐ Yes ☐ No ☐ N/A**

This publication is available free of charge from: https://doi.org/10.6028/NIST.SP.1253

This publication is available free of charge from: https://doi.org/10.6028/NIST.SP.1253

Checklist and Test Procedures for Cash-Activated Retail Motor-Fuel Dispensers

Page LMD-50, Beginning with Checklist Item Numbered 15.10.

Code References: S.1.6.7. Recorded Representations; and S.1.6.8. Recorded Representations for Transaction Where a Post-Delivery Discount(s) is Provided.

Except for fleet sales and other price contract sales, for transactions conducted with point-of-sale systems or devices activated by credit cards, debit cards, or cash, a printed receipt containing information about the transaction shall be available to the customer as outlined in the following items. A printed receipt must always be available to the customer upon request and printing of the receipt may be initiated at the option of the customer. In addition, some systems may be equipped with the capability to issue an electronic receipt; for those systems, the customer may be given the option to receive the receipt electronically (e.g., via cell phone, computer, etc.). See also NCWM Publication 14, Code Reference: G-S.5.6. Recorded Representations.

Device capabilities: ☐ Printed Receipt ☐ Electronic Receipt

59.1	The system must provide a receipt to be made available to the customer at the completion of the transaction through either:	
15.10.1.	a built-in recording element OR	☐ Yes ☐ No ☐ N/A
15.10.2.	a separate recording element that is part of the system	☐ Yes ☐ No ☐ N/A
59.2	Except for transactions where a post-delivery discount is provided, the customer receipt must contain the following information:	~~☐ Yes ☐ No ☐ N/A~~
	~~T~~the total volume of the delivery;	☐ Yes ☐ No ☐ N/A
	~~T~~the unit price;	☐ Yes ☐ No ☐ N/A
	~~T~~the total computed price; ~~and~~	☐ Yes ☐ No ☐ N/A
	~~T~~the product identity by name, symbol, abbreviation, or code number**; and**	☐ Yes ☐ No ☐ N/A
	the dispenser designation by either and alpha or numerical description (effective as of January 1, 2021).	**☐ Yes ☐ No ☐ N/A**
59.3	Where a post-delivery discount(s) is applied, the sales receipt must provide:	~~☐ Yes ☐ No ☐ N/A~~
	~~T~~the product identity by name, symbol, abbreviation, or code number;	☐ Yes ☐ No ☐ N/A
	the total quantity, unit price, and total computed price that were displayed on the dispenser at the end of the delivery prior to any post-delivery discount(s);	☐ Yes ☐ No ☐ N/A
	an itemization of the post-delivery discounts to the unit price; ~~and~~	☐ Yes ☐ No ☐ N/A
	the final total price of each fuel sale after all post-delivery discounts are applied**; and**	☐ Yes ☐ No ☐ N/A
	the dispenser designation by either and alpha or numerical description (effective as of January 1, 2021).	**☐ Yes ☐ No ☐ N/A**
59.4	The unit of measure shall be clearly defined. Acceptable symbols for units are: Gallon Gal, of G for gallons and Liter, l or L for liters. Upper or lower case is optional except that a lower case "l" must not resemble a "1" (numeral one), (e.g. a script "l" is an acceptable symbol for liters.)	☐ Yes ☐ No ☐ N/A
	The unit of measure may be defined with either the quantity value, (e.g., 10 000 GAL) or with the unit price, (e.g., $1.119/Gal), not necessarily both.	
59.5	Acceptable designations of the unit price are: "@" as a prefix to the unit price value, an upper or lower case "X" or slash between the quantity and unit price, $/G, PPG	

(price per gallon), PPL (price per liter), UP (unit price), P/G, price/Vol, PPU (price per unit), DOL/GAL.

59.6 The total fuel price must be clearly distinguished from other information in the fuel transaction. To identify the total fuel sale price, use one of the following methods:

Decimal point in the proper dollar position, (e.g., XX.XX.) If a dollar sign is not used, there must be at least one offset column of the least significant digit in recorded information, other than the sale price.

The words gas, diesel, or other product designation may be used with the word "SALE" (e.g., "FUEL SALE" or "GAS SALE") or the product identification followed by the sale price, (e.g., GAS 20.00.)

This publication is available free of charge from: https://doi.org/10.6028/NIST.SP.1253

Checklist and Test Procedures for Card-Activated Retail Motor-Fuel Dispensers
Page LMD-84, Beginning with Checklist Item Numbered 38.8.

Code References: S.1.6.7. Recorded Representations; and S.1.6.8. Recorded Representations for Transaction Where a Post-Delivery Discount(s) is Provided.

Except for fleet sales and other price contract sales, for transactions conducted with point-of-sale systems or devices activated by credit cards, debit cards, or cash, a printed receipt containing information about the transaction shall be available to the customer as outlined in the following items. A printed receipt must always be available to the customer upon request and printing of the receipt may be initiated at the option of the customer. In addition, some systems may be equipped with the capability to issue an electronic receipt; for those systems, the customer may be given the option to receive the receipt electronically (e.g., via cell phone, computer, etc.). See also NCWM Publication 14, Code Reference: G-S.5.6. Recorded Representations.

Device capabilities: ☐ Printed Receipt ☐ Electronic Receipt

33.1	The system must provide a receipt to be made available to the customer at the completion of the transaction through either:	
33.1.3	a built-in recording element OR	☐ Yes ☐ No ☐ N/A
33.2.3	a separate recording element that is part of the system	☐ Yes ☐ No ☐ N/A
33.2	Except for transactions where a post-delivery discount is provided, the customer receipt must contain the following information:	
33.2.1.	~~T~~the total volume of the delivery;	☐ Yes ☐ No ☐ N/A
33.2.2	~~T~~the unit price;	☐ Yes ☐ No ☐ N/A
33.2.3	~~T~~the total computed price; ~~and~~	☐ Yes ☐ No ☐ N/A
33.2.4	~~T~~the product identity by name, symbol, abbreviation, or code number**; and**	☐ Yes ☐ No ☐ N/A
33.2.5	**the dispenser designation by either and alpha or numerical description (effective as of January 1, 2021)**.	**☐ Yes ☐ No ☐ N/A**
33.3	Where a post-delivery discount(s) is applied, the sales receipt must provide:	
33.3.1	~~T~~the product identity by name, symbol, abbreviation, or code number;	☐ Yes ☐ No ☐ N/A
43.4	the total quantity, unit price, and total computed price that were displayed on the dispenser at the end of the delivery prior to any post-delivery discount(s);	☐ Yes ☐ No ☐ N/A
33.3.3	an itemization of the post-delivery discounts to the unit price; and	☐ Yes ☐ No ☐ N/A
33.3.4	the final total price of each fuel sale after all post-delivery discounts are applied**; and**	☐ Yes ☐ No ☐ N/A
33.3.5	**the dispenser designation by either and alpha or numerical description (effective as of January 1, 2021)**.	**☐ Yes ☐ No ☐ N/A**

This publication is available free of charge from: https://doi.org/10.6028/NIST.SP.1253

Checklist and Test Procedures for Card-Activated Retail Motor-Fuel Dispensers
Page ECRD-6, Section 3.

3. Recorded Representations

Code References: S.1.6.7. Recorded Representations; and S.1.6.8. Recorded Representations for Transaction Where a Post-Delivery Discount(s) is Provided.

Except for fleet sales and other price contract sales, for transactions conducted with point-of-sale systems or devices activated by credit cards, debit cards, or cash, a printed receipt containing information about the transaction shall be available to the customer as outlined in the following items. A printed receipt must always be available to the customer upon request and printing of the receipt may be initiated at the option of the customer. In addition, some systems may be equipped with the capability to issue an electronic receipt; for those systems, the customer may be given the option to receive the receipt electronically (e.g., via cell phone, computer, etc.).

Device capabilities: ☐ Printed Receipt ☐ Electronic Receipt

3.1. The system must provide a receipt to be made available to the customer at the completion of the transaction through either:

3.1.1. a built-in recording element OR ☐ Yes ☐ No ☐ N/A

3.1.2. a separate recording element that is part of the system ☐ Yes ☐ No ☐ N/A

3.2. Except for transactions where a post-delivery discount is provided, the customer receipt must contain the following information:

3.2.1 ~~T~~the total volume of the delivery; ☐ Yes ☐ No ☐ N/A

3.2.2 ~~T~~the unit price; ☐ Yes ☐ No ☐ N/A

3.2.3 ~~T~~the total computed price; ~~and~~ ☐ Yes ☐ No ☐ N/A

3.2.4 ~~T~~the product identity by name, symbol, abbreviation, or code number**; and** ☐ Yes ☐ No ☐ N/A

3.2.5 **the dispenser designation by either and alpha or numerical description (effective as of January 1, 2021)**. ☐ **Yes** ☐ **No** ☐ **N/A**

3.3. Where a post-delivery discount(s) is applied, the sales receipt must provide.

3.3.1. ~~T~~the product identity by name, symbol, abbreviation, or code number ☐ Yes ☐ No ☐ N/A

3.3.2. ~~T~~the total quantity, unit price, and total computed price that were displayed on the dispenser at the end of the delivery prior to any post-delivery discount(s); ☐ Yes ☐ No ☐ N/A

3.3.3. ~~A~~an itemization of the post-delivery discounts to the unit price; ~~and~~ ☐ Yes ☐ No ☐ N/A

3.3.4. ~~T~~the final total price of each fuel sale after all post-delivery discounts are applied**; and** ☐ Yes ☐ No ☐ N/A

3**.3.5. the dispenser designation by either and alpha or numerical description (effective as of January 1, 2021)**. ☐ **Yes** ☐ **No** ☐ **N/A**

3.4. The unit of measure shall be clearly defined. Acceptable symbols for units are: Gallon Gal, of G for gallons and Liter, l or L for liters. Upper or lower case is optional except that a lower case "l" must not resemble a "1" (numeral one), (e.g. a script "l" is an acceptable symbol for liters.) ☐ Yes ☐ No ☐ N/A

The unit of measure may be defined with either the quantity value, (e.g., 10 000 GAL) or with the unit price, (e.g., $1.119/Gal), not necessarily both. ☐ **Yes** ☐ **No** ☐ **N/A**

3.5. Acceptable designations of the unit price are: "@" as a prefix to the unit price ☐ Yes ☐ No ☐ N/A

This publication is available free of charge from: https://doi.org/10.6028/NIST.SP.1253

value, an upper or lower case "X" or slash between the quantity and unit price, $/G, PPG (price per gallon), PPL (price per liter), UP (unit price), P/G, price/Vol, PPU (price per unit), DOL/GAL.

3.6. The total fuel price must be clearly distinguished from other information in the fuel transaction. To identify the total fuel sale price, use one of the following methods:

3.6.1. Decimal point in the proper dollar position, (e.g., XX.XX.) If a dollar sign is not used, there must be at least one offset column of the least significant digit in recorded information, other than the sale price. ☐ Yes ☐ No ☐ N/A

3.6.2. The words gas, diesel, or other product designation may be used with the word "SALE" (e.g., "FUEL SALE" or "GAS SALE") or the product identification followed by the sale price, (e.g., GAS 20.00.) ☐ Yes ☐ No ☐ N/A

3.7. Each fuel delivery in a transaction for a single customer must be recorded separately. ☐ Yes ☐ No ☐ N/A

3.8. The product identity for fuel need only distinguish it from other items. The product name, code number (similar to a price look-up code), or hose or pump number are acceptable designations of product identify. See LMD Code S.1.6.4. ☐ Yes ☐ No ☐ N/A

Example 1		**Example 2**	
Meat	3.89	Meat	3.89
Soda	2.99	Soda	2.99
Gas 5.080 G @ 1.000	5.08	Gas 4.080 G @ 1.000	4.08
Cig	1.00		

Note: *NIST Handbook 44 does not require that product identification, date, and change due be printed on a ticket or a cash register receipt. These requirements apply to recorded representations resulting from a final sale, not to deposit slips for prepay transactions, etc.*

3.9. The quantity representation of an item sold by count must be expressed in whole units. An expression of count with a decimal point and trailing zeroes, (e.g., 2.00 items) is acceptable provided that fractions of a whole unit cannot be expressed. ☐ Yes ☐ No ☐ N/A

This publication is available free of charge from: https://doi.org/10.6028/NIST.SP.1253

This publication is available free of charge from: https://doi.org/10.6028/NIST.SP.1253

THIS PAGE INTENTIONALLY LEFT BLANK

This publication is available free of charge from: https://doi.org/10.6028/NIST.SP.1253

Appendix E
to the September 2018 NTEP Measuring Sector Summary

Sealing - Water Meters – Proposed Changes to NCWM Publication 14 to Reflect Changes Adopted by the NCWM in July

The Sector is asked to consider recommending modifications to NCWM Publication 14 to reflect the changes to the Water Meters Code in NIST Handbook 44 to add specific criteria for sealing water meters and to align the sealing requirements with that of other measuring device codes in HB44. For reference, see the Item WTR-2 on the NCWM S&T Committees 2018 Agenda.

Changes are proposed to Pub 14 (as shown further below in highlighted, marked text) in the following sections of the Liquid-Measuring Devices Checklist and Test Procedures:

- **Additional Checklists and Test Procedures for Water Meters –** Code Reference: S.2.1. Provision for Sealing, Page LMD-92

Changes are also proposed to align the existing Code Reference S.2.1. Provision for Sealing with corresponding checklist items in other sections of the Liquid-Measuring Devices Checklist.

Additional Checklists and Test Procedures for Water Meters
Page LMD-92, Section 43.

43. Measuring Elements

Code Reference: S.2.1. Provision for Sealing

Measuring elements shall be designed with adequate provisions to prevent changes from being made to the measuring element or the flow rate control (if the flow rate control affects the accuracy of deliveries) without evidence of the change being made. These provisions can be an approved means of security (e.g., data change audit trail) or physically applying a security seal which must be broken before adjustments can be made. When applicable, the adjusting mechanism shall be readily accessible for the purposes of affixing a security seal.

~~**43.1 Adequate provision shall be made for applying security seals in such a manner that no adjustment or interchange may be made of::**~~

~~**43.1.1 any measurement elements, AND** ☐ Yes ☐ No ☐ N/A~~

~~**43.1.2 any adjustable element for controlling delivery rate when such rate tends to affect the accuracy of deliveries.** ☐ Yes ☐ No ☐ N/A~~

~~**43.1.3 The adjusting mechanism shall be readily accessible for purposes of affixing a security seal.** ☐ Yes ☐ No ☐ N/A~~

43.1. A measuring element shall have provisions for either:

43.1.1. Applying a physical security seal. OR ☐ Yes ☐ No ☐ N/A

43.1.2. An approved means of security (e.g., data change audit trail) so that no changes may be made to its adjustable components. ☐ Yes ☐ No ☐ N/A

This publication is available free of charge from: https://doi.org/10.6028/NIST.SP.1253

43.2. Any adjustable element controlling the delivery rate shall provide for sealing or other approved means of security (e.g., data audit trail) if the flow rate affects the accuracy of deliveries. ☐ Yes ☐ No ☐ N/A

43.3. When applicable, the adjusting mechanism shall be readily accessible for the purposes of affixing a security seal. ☐ Yes ☐ No ☐ N/A

43.4. Audit trails shall use the format set forth in the Common and General Code Criteria section of this checklist (Code Reference G-S.8) and in Appendix A, Philosophy for Sealing, and Appendix B, Requirements for Metrological Audit Trails. ☐ Yes ☐ No ☐ N/A

43.5. Water meters with remote configuration capabilities shall be sealed according to Appendix A, Philosophy for Sealing, and Appendix B, Requirements for Metrological Audit Trails (Table S.2.2.) and under the "Common and General Code Criteria" section of this checklist. ☐ Yes ☐ No ☐ N/A

43.6. A change to the adjustment of any measuring element shall be individually identified. ☐ Yes ☐ No ☐ N/A

Note: Examples of acceptable identification of a change to the adjustment of a measuring element include but are not limited to:

a. **A broken, missing, or replaced physical seal on an individual measuring element.**

b. **A change in a calibration factor for each measuring element.**

c. **Display of the date of or the number of days since the last calibration event for each measuring element.**

d. **A counter indicating the number of calibration events per measuring element.**

This publication is available free of charge from: https://doi.org/10.6028/NIST.SP.1253

Appendix F
to the September 2018 NTEP Measuring Sector Summary

Power Loss - Proposed Changes to Align NCWM Pub 14 and HB 44

The Sector is asked to consider changes to the following sections of the NCWM Publication 14 Liquid-Measuring Devices Checklist to align requirements for Power Loss for retail motor-fuel applications with corresponding NIST Handbook 44 requirements. Changes are proposed (as shown further below in highlighted, marked text) in the following sections of the Liquid-Measuring Devices Checklist and Test Procedures:

- **Retail Motor-Fuel Dispensers (RMFDs) –** Code References S.1.6.2.1. and S.1.6.2.2. Provisions for Power Loss – Page LMD-37
- **Cash-Activated RMFDs -** S.1.6.2. Provisions for Power Loss – Page LMD-47
- **Liquefied Petroleum Gas (LPG) Liquid Measuring Devices –** Code Reference S.1.5.6. - Page LMD-68
- **Mass Flow Meters** - Code References S.2.4.1. and S.2.4.2. on Page LMD-76
- **Hydrogen Gas Measuring Devices** - Code Reference S.2.3. on Page LMD-100 and LMD-106
- **Field Evaluation & Permanence Tests - CNG Devices** - Code References S.2.4.1. and S.2.4.2. on Page LMD-123

Liquid Measuring Devices – Checklists and Test Procedures for Retail Motor-Fuel Dispensers Excerpt – Page LMD-37

Code Reference: S.1.6.2.1. and S.1.6.2.2. Provisions for Power Loss

Even if power fails during a delivery, it is still necessary to correctly complete all transactions in progress at the time of the power failure. ~~**Quantity and total sales price i**~~**I**nformation **necessary to complete a transaction in process (e.g., the quantity along with the total sales price and/or the unit price)** shall be recallable for at least 15 minutes after the power failure. The information may be recalled at the dispenser or at the console if the console indications are accessible to the customer. Operator information, such as fuel and money value totals, shall be retained in memory during a power failure. The operator information is not required to be recallable during the power failure, but shall be recallable after power is restored. Test to determine if the indications are accurate when the delivery is continued after a power failure.

Note: *For remote controllers (e.g., cash register, console, etc.) which have the capability to retain information pertaining to a transaction (e.g., stacked completed sales.) If the information cannot be recalled at the dispenser following a power outage, means (e.g., uninterruptible power supply or other means) must be provided to enable the transaction information to be recalled and verified for at least 15 minutes following a power outage.*

59.1	~~**The quantity and total sales price**~~ **Information needed to complete a transaction in progress such as the quantity along with the total sales price and/or the unit price** shall be recallable for 15 minutes after the power failure.	☐ Yes ☐ No ☐ N/A
59.2	**This information may be recalled at the dispenser or at the console, provided the console is accessible to the customer.**	☐ **Yes** ☐ **No** ☐ **N/A**
59.3	The quantity and total sales price values shall be correct if the power fails between deliveries.	☐ Yes ☐ No ☐ N/A
59.4	The quantity and total sales price values shall be correct if the delivery is continued after a power failure.	☐ Yes ☐ No ☐ N/A
59.5	The operator's information shall be retained in memory during a power failure.	☐ Yes ☐ No ☐ N/A
59.6	Remote controllers which stack completed sales must have a means to enable the transaction information to be recalled and verified for at least 15 minutes.	☐ Yes ☐ No ☐ N/A

This publication is available free of charge from: https://doi.org/10.6028/NIST.SP.1253

Liquid Measuring Devices – Checklists and Test Procedures for Cash-Activated Retail Motor Fuel Dispensers Excerpt – Page LMD-47

60. Code Reference: S.1.6.2. Provisions for Power Loss

Even if power is interrupted during a delivery, it is still necessary to correctly complete all transactions in progress at the time of the power interruption. In the event of a power loss, the information needed to complete any transaction in progress at the time of the power loss ~~**(such as the quantity and unit price, sales price, or amount of money already inserted into the cash acceptor)**~~ shall be determinable for at least 15 minutes at the dispenser or at the console or journal printer if the console or journal printer is accessible to the customer.

All portions of the transaction must be accounted for in order to complete the transaction. This information ~~**would**~~ includes the following: (1) the total amount of money that was inserted into the device prior to the power interruption, (2) the ~~**amount**~~**quantity** of product already dispensed **along with the total sales price and/or the unit price** (which should be available from the dispenser and which must comply with the requirements of S.1.6.2., (3) and any bill that has been inserted but has not yet been recognized by the cash acceptor.

Note*: For bills that have not yet been drawn into the cash acceptor to the point that the bill is no longer visible, it is assumed that the information on the bill denomination can be obtained from visual examination.*

Various methods may be used to recall specific portions of the transaction depending on how the basic system operates. For example, systems that can print a record of the amount fed into the machine as each bill is fed into the device maintain an ongoing record of bills recognized by the system. Other systems may not print a receipt until the end of the transaction, so the information is recalled on a journal printer accessible to the customer or can be recalled on the cash acceptor display.

Check to see what happens when the power is interrupted at different points of the transaction. Note what occurs at the points where power is interrupted, what information is provided to the customer on the receipt, audibly and visually in the form of instructions or error messages. Because systems may be installed with separate power lines to the console, card reader, and dispenser may be installed, tests should be run with power interruptions to different parts of the system to evaluate the potential for accidental or intentional errors. The appropriate device response depends upon when the power loss occurs during the delivery sequence.

60.1 Systems with Battery Back-up or Uninterruptible Power Supply or Equivalent - Some systems are equipped with a battery back-up or an uninterruptible power supply (or equivalent) which allows a transaction to continue in the event of a power loss. For such systems, the transaction in progress at the time of a power interrupted must continue as if no power interruption had occurred (or comply with the requirements for systems not equipped with a battery back-up.) That is, all bills (including bills being fed into the device at the time of the power loss) must be correctly accounted for, and the quantity and total sale amounts must be mathematically correct. Check these systems by interrupting power at several points in the transaction to ensure that all information (total price, quantity, mathematical agreement, and total dollar amount inserted by the customer) is accounted for correctly. ☐ Yes ☐ No ☐ N/A

All Other Systems: To check the operation of systems not equipped with a battery backup, uninterruptible power supply, or equivalent, interrupt power as described below. As noted earlier, if separate power lines supply different components in the system, interrupt power to different parts of the system.

This publication is available free of charge from: https://doi.org/10.6028/NIST.SP.1253

60.2 When one or more bills has been accepted and registered by the device, but product has not yet been dispensed, at least one of the following criteria must be met to ensure that this information can be recalled in the event of a power interruption:

60.2.1 The denomination of the bill must be printed by the printer on the device as the device recognizes the bill. (The printed receipt must be available to the customer.) ☐ Yes ☐ No ☐ N/A

60.2.2 The denomination of each bill must be printed by a journal or other printer accessible to the customer as each bill is recognized by the device. ☐ Yes ☐ No ☐ N/A

60.2.3 The running total display must be capable of being recalled for at least 15 minutes. ☐ Yes ☐ No ☐ N/A

60.2.4 Means provided to enable the customer to retrieve the money inserted into the device (e.g., a button which can be used during a power interruption to eject the money inserted by the customer.) ☐ Yes ☐ No ☐ N/A

60.2.5 Other means used to provide a visual or printed record of the total amount of money accepted by the device. ☐ Yes ☐ No ☐ N/A

60.3 There is a brief period of time during which a bill has been accepted by the cash acceptor but has not yet been recognized by the device. The following criteria must be met to ensure that this information can be recalled in the event of a power failure. ☐ Yes ☐ No ☐ N/A

60.3.1 Means provided to enable the attendant or customer to retrieve the bill (for example, a button which can be used during a power interruption to eject the bill or if the cash acceptor box can be removed by the attendant and the bill retrieved.) ☐ Yes ☐ No ☐ N/A

Note: *There may be a space of time in which a bill can be caught partially in and out of the cash acceptor during a power interruption. In such a case, if the denomination of the bill is visible to the customer and attendant, this is sufficient to provide information about the bill being fed into the device at the time of the power interruption. The cash acceptor must comply with the other applicable items noted above.*

It is expected that the retail motor fuel dispenser will comply with S.1.6.2. and the information on the product already dispensed can be recalled through this portion of the system.

60.4 ~~**Power should be interrupted**~~ **Interrupt power** at different points in the transaction to determine that all transaction information can be recalled **(either at the dispenser or at the console, provided the console is accessible to the customer)** in the event of a power interruption including combinations of the following:

60.4.1 After one bill has been inserted. ☐ Yes ☐ No ☐ N/A

60.4.2 After several bills have been inserted. ☐ Yes ☐ No ☐ N/A

60.4.3 While a bill is being inserted. ☐ Yes ☐ No ☐ N/A

60.4.4 After a bill has been inserted but not yet recognized. ☐ Yes ☐ No ☐ N/A

60.4.5 After a bill(s) has been inserted and recognized, but the on/off handle is still in the "off" position. ☐ Yes ☐ No ☐ N/A

60.4.6 After a bill(s) has been inserted and recognized, the on/off handle is in the "on" position, but no product has been dispensed. ☐ Yes ☐ No ☐ N/A

60.4.7 After a bill(s) has been inserted and recognized, the on/off handle is in the "on" position, and product is being dispensed. ☐ Yes ☐ No ☐ N/A

This publication is available free of charge from: https://doi.org/10.6028/NIST.SP.1253

Liquid Measuring Devices – Checklists and Test Procedures for Liquefied Petroleum Gas (LPG) Liquid Measuring Devices Excerpt - Page LMD-68

Code Reference: S.1.5.6. Provisions for Power Loss

Even if power fails during a delivery, it is still necessary to correctly complete all transactions in progress at the time of the power failure. **Information needed to complete a transaction in progress, such as ~~Q~~quantity ~~and~~ along with** total sales price **and/or unit price** information shall be recallable for at least 15 minutes after the power failure. The information may be recalled at the dispenser or at the console if the console indications are accessible to the customer. Operator information, such as fuel and money value totals, shall be retained in memory during a power failure. The operator information is not required to be recallable during the power failure, but shall be recallable after power is restored. Test to determine if the indications are accurate when the delivery is continued after a power failure.

Note: For remote controllers (e.g., cash register, console, etc.) which have the capability to retain information pertaining to a transaction (e.g., stacked completed sales.) If the information cannot be recalled at the dispenser following a power outage, means (e.g., uninterruptible power supply or other means) must be provided to enable the transaction information to be recalled and verified for at least 15 minutes following a power outage.

28.6.	~~The quantity and total sales price~~ **Information needed to complete a transaction in progress such as the quantity along with the total sales price and/or the unit price** shall be recallable for 15 minutes after the power failure.	☐ Yes ☐ No ☐ N/A
28.7.	**This information may be recalled at the dispenser or at the console, provided the console is accessible to the customer.**	☐ Yes ☐ No ☐ N/A
28.8.	The quantity and total sales price values shall be correct if the power fails between deliveries.	☐ Yes ☐ No ☐ N/A
28.9.	The quantity and total sales price values shall be correct if the delivery is continued after a power failure.	☐ Yes ☐ No ☐ N/A
28.10.	The operator's information shall be retained in memory during a power failure.	☐ Yes ☐ No ☐ N/A
28.11.	Remote controllers which stack completed sales must have a means to enable the transaction information to be recalled and verified for at least 15 minutes.	☐ Yes ☐ No ☐ N/A

In addition to the above criteria for power, loss, the following applies to evaluations of Cash-Activated LPG Retail Motor-Fuel Dispensers:

In addition to the above checklist complete those portions of Section 15. of LMD Checklist, Checklists and Test Procedures for Cash-Activated Retail Motor-Fuel Dispensers which relate to provisions for power loss.

This publication is available free of charge from: https://doi.org/10.6028/NIST.SP.1253

Liquid Measuring Devices – Checklists and Test Procedures for Mass Flow Meters Excerpt – Page LMD-76

Code Reference: S.2.4.1. and S.2.4.2. Provisions for Power Loss

Even if power fails during a delivery, it is still necessary to correctly complete all transactions in progress at the time of the power failure. Quantity and total sales price information shall be recallable for at least 15 minutes after the power failure. The information may be recalled at the dispenser or at the console if the console indications are accessible to the customer. Operator information, such as fuel and money value totals, shall be retained in memory during a power failure. The operator information is not required to be recallable during the power failure, but shall be recallable after power is restored. Test to determine if the indications are accurate when the delivery is continued after a power failure.

32.23.	~~**The quantity and total sales price**~~ **Information needed to complete a transaction in progress such as the quantity along with the total sales price and/or the unit price** shall be recallable for 15 minutes after the power failure.	☐ Yes ☐ No ☐ N/A
32.24.	**This information may be recalled at the dispenser or at the console, provided the console is accessible to the customer.**	☐ **Yes** ☐ **No** ☐ **N/A**
32.25.	The quantity and total sales price values shall be correct if the power fails between deliveries.	☐ Yes ☐ No ☐ N/A
32.26.	The quantity and total sales price values shall be correct if the delivery is continued after a power failure.	☐ Yes ☐ No ☐ N/A
32.27.	The operator's information shall be retained in memory during a power failure.	☐ Yes ☐ No ☐ N/A

Liquid Measuring Devices – Additional Checklists and Test Procedures for Hydrogen Gas – Measuring Devices Excerpt – Page LMD-100 and LMD-106

Code Reference: S.2.3. Provisions for Power Loss and S.2.3.1. Transaction Information

Even if power fails during a delivery, it is still necessary to correctly complete all transactions in progress at the time of the power failure. ~~**Quantity and total sales price**~~ ~~**i**~~Information **necessary to complete a transaction in process (e.g., the quantity along with the total sales price and/or the unit price)** shall be recallable for at least 15 minutes after the power failure. The information may be recalled at the dispenser or at the console if the console indications are accessible to the customer. Operator information, such as fuel and money value totals, shall be retained in memory during a power failure. The operator information is not required to be recallable during the power failure, but shall be recallable after power is restored. Test to determine if the indications are accurate when the delivery is continued after a power failure.

Note: *For remote controllers (e.g., cash register, console, etc.) which have the capability to retain information pertaining to a transaction (e.g., stacked completed sales.) If the information cannot be recalled at the dispenser following a power outage, means (e.g., uninterruptible power supply or other means) must be provided to enable the transaction information to be recalled and verified for at least 15 minutes following a power outage.*

This publication is available free of charge from: https://doi.org/10.6028/NIST.SP.1253

Code Reference: S.2.3.2. User Information

33.1	~~**The quantity and total sales price**~~ **Information needed to complete a transaction in progress such as the quantity along with the total sales price and/or the unit price** shall be recallable for 15 minutes after the power failure.	☐ Yes ☐ No ☐ N/A
33.2	**This information may be recalled at the dispenser or at the console, provided the console is accessible to the customer.**	☐ **Yes** ☐ **No** ☐ **N/A**
33.3	The quantity and total sales price values shall be correct if the power fails between deliveries.	☐ Yes ☐ No ☐ N/A
33.4	The quantity and total sales price values shall be correct if the delivery is continued after a power failure.	☐ Yes ☐ No ☐ N/A
33.5	The operator's information shall be retained in memory during a power failure.	☐ Yes ☐ No ☐ N/A
33.6	Remote controllers which stack completed sales must have a means to enable the transaction information to be recalled and verified for at least 15 minutes.	☐ Yes ☐ No ☐ N/A

Page LMD-106:

34. Cash Activated Hydrogen Gas-Measuring Devices

The following criteria and test procedures apply to cash-activated retail vehicle fuel dispensers. Tests using various denominations of bills accepted by the cash acceptor should be performed.

Certificates of Conformance will cover the use of the cash acceptor option at both attended and unattended stations. Cash Acceptors which are used at unattended locations must meet the marking requirements of paragraph G-UR.3.4. Responsibility, Money-Operated Devices shall be clearly and conspicuously displayed on the device or immediately adjacent to the device information detailing the return of monies paid when the product cannot be obtained.

Even if power is interrupted during a delivery, it is still necessary to correctly complete all transactions in progress at the time of the power interruption. In the event of a power loss, the information needed to complete any transaction in progress at the time of the power loss ~~**(such as the quantity and unit price, sales price, or amount of money already inserted into the cash acceptor)**~~ shall be determinable for at least 15 minutes at the dispenser or at the console or journal printer if the console or journal printer is accessible to the customer.

All portions of the transaction must be accounted for in order to complete the transaction. This information includes the following: (1) the total amount of money that was inserted into the device prior to the power interruption, (2) the ~~**amount**~~**quantity** of product already dispensed **along with the total sales price and/or the unit price** (which should be available from the dispenser and which must comply with the requirements of S.2.3. Provision for Power Loss, **and** (3) ~~**and**~~ any bill that has been inserted but has not yet been recognized by the cash acceptor.

Note: For bills that have not yet been drawn into the cash acceptor to the point that the bill is no longer visible, it is assumed that the information on the bill denomination can be obtained from visual examination.

Various methods may be used to recall specific portions of the transaction depending on how the basic system operates. For example, systems that can print a record of the amount fed into the machine as each bill is fed into the device maintain an ongoing record of bills recognized by the system. Other systems may not print a receipt until the end of the transaction, so the information is recalled on a journal printer accessible to the customer or can be recalled on the cash acceptor display.

Check to see what happens when the power is interrupted at different points of the transaction. Note what occurs at the points where power is interrupted, what information is provided to the customer on the receipt, audibly and visually in the form of instructions or error messages. Because systems may be installed with separate power lines to the console, card reader, and dispenser may be installed, tests should be run with power interruptions to different parts of the system to evaluate the potential for accidental or intentional errors. The appropriate device response depends upon when the power loss occurs during the delivery sequence.

This publication is available free of charge from: https://doi.org/10.6028/NIST.SP.1253

Code Reference: S.2.3. Provisions for Power Loss

34.1 Systems with Battery Back-up or Uninterruptible Power Supply or Equivalent - Some systems are equipped with a battery back-up or an uninterruptible power supply (or equivalent) which allows a transaction to continue in the event of a power loss. For such systems, the transaction in progress at the time of a power interrupt must continue as if no power interruption had occurred (or comply with the requirements for systems not equipped with a battery back-up.) That is, all bills (including bills being fed into the device at the time of the power loss) must be correctly accounted for, and the quantity and total sale amounts must be mathematically correct. Check these systems by interrupting power at several points in the transaction to ensure that all information (total price, quantity, mathematical agreement, and total dollar amount inserted by the customer) is accounted for correctly. ☐ Yes ☐ No ☐ N/A

All Other Systems:

To check the operation of systems not equipped with a battery backup, uninterruptible power supply, or equivalent, interrupt power as described below. As noted earlier, if separate power lines supply different components in the system, interrupt power to different parts of the system.

33.1 When one or more bills has been accepted and registered by the device, but product has not yet been dispensed, at least one of the following criteria must be met to ensure that this information can be recalled in the event of a power interruption:

33.2 When one or more bills has been accepted and registered by the device, but product has not yet been dispensed, at least one of the following criteria must be met to ensure that this information can be recalled in the event of a power interruption:

33.2.1. The denomination of the bill must be printed by the printer on the device as the device recognizes the bill. (The printed receipt must be available to the customer.) ☐ Yes ☐ No ☐ N/A

33.2.2. The denomination of each bill must be printed by a journal or other printer accessible to the customer as each bill is recognized by the device. ☐ Yes ☐ No ☐ N/A

33.2.3. The running total display must be capable of being recalled for at least 15 minutes. ☐ Yes ☐ No ☐ N/A

33.2.4. Means provided to enable the customer to retrieve the money inserted into the device (e.g., a button which can be used during a power interruption to eject the money inserted by the customer.) ☐ Yes ☐ No ☐ N/A

33.2.5. Other means used to provide a visual or printed record of the total amount of money accepted by the device. ☐ Yes ☐ No ☐ N/A

33.3 There is a brief period of time during which a bill has been accepted by the cash acceptor but has not yet been recognized by the device. The following criteria must be met to ensure that this information can be recalled in the event of a power failure.

33.3.1. Means provided to enable the attendant or customer to retrieve the bill (for example, a button which can be used during a power interruption to eject the bill or if the cash acceptor box can be removed by the attendant and the bill retrieved.) ☐ Yes ☐ No ☐ N/A

Note: *There may be a space of time in which a bill can be caught partially in and out of the cash acceptor during a power interruption. In such a case, if the denomination of the bill is visible to the customer and attendant, this is sufficient to provide information about the bill being fed into the device at the time of the power interruption. The cash acceptor must comply with the other applicable items noted above.*

It is expected that the retail vehicle fuel dispenser will comply with paragraph S.2.3. Provision for Power Loss; and the information on the product already dispensed can be recalled through this portion of the system.

33.4 ~~**Power should be interrupted**~~ **Interrupt power** at different points in the transaction to determine that all transaction information can be recalled **(either at the dispenser or at the console, provided the console is accessible to the customer)** in the event of a power interruption including combinations of the following:

33.4.1.	After one bill has been inserted.	☐ Yes	☐ No	☐ N/A
33.4.2.	After several bills have been inserted.	☐ Yes	☐ No	☐ N/A
33.4.3.	While a bill is being inserted.	☐ Yes	☐ No	☐ N/A
33.4.4.	After a bill has been inserted but not yet recognized.	☐ Yes	☐ No	☐ N/A
33.4.5.	After a bill(s) has been inserted and recognized, but the on/off control is still in the "off" position.	☐ Yes	☐ No	☐ N/A
33.4.6.	After a bill(s) has been inserted and recognized, the on/off control is in the "on" position, but no product has been dispensed.	☐ Yes	☐ No	☐ N/A
33.4.7.	After a bill(s) has been inserted and recognized, the on/off control is in the "on" position, and product is being dispensed.	☐ Yes	☐ No	☐ N/A

Liquid Measuring Devices – Field Evaluation and Permanence Tests for Metering Systems Excerpt – Page LMD-123

The Following Tests are Considered Appropriate for CNG Dispensers:

…

4. Power loss test. (Code References S.2.4.1. and S.2.4.2.)
   - Transaction in progress at power loss, information shall be retainable for 15 minutes **at the dispenser or at the console, provided the console is accessible to the customer**.
   - Device memory shall retain quantity of product and sales price during power loss.

5. **Other tasks.**
   - Security seal--apply wire security seal to secure adjusting mechanism (if applicable.)
   - (Code References G-UR.4.5. and S.3.5.)
   - Note on the official report the number of gasoline gallon equivalents of product dispensed during the test.
   - After all equipment at a location has been tested, review results to determine compliance with equipment maintenance and use of adjustments. (Code Reference G-UR.4.1. and G-UR.4.3.)

This publication is available free of charge from: https://doi.org/10.6028/NIST.SP.1253

This publication is available free of charge from: https://doi.org/10.6028/NIST.SP.1253

Appendix G
to the September 2018 NTEP Measuring Sector Summary

Items Under Consideration for the 2019 NCWM S&T Committee Carryover and New Items for Measuring Sector Discussion as Time Allows

The "Additional Items as Time Allows" section of the 2018 NTEP Measuring Sector Agenda, includes "carryover" and "new" items which may appear on the 2019 NCWM S&T Committee's Interim Agenda and which may be of interest to Measuring Sector members. To streamline the Sector's agenda, the "Items Under Consideration" for these items are included in this Appendix. Numbering corresponds to the item numbers on the Sector's Agenda. Additional details on carryover items can be found in the 2018 NCWM S&T Committee Report.

6. S&T 2018 Carryover Item VTM-1B – S.3.1.1. Diversion of Measured Liquid and UR.2.6. Clearing the Discharge Hose

Items Under Consideration:
Modify paragraph S.3.1.1. as follows:

S.3.1.1. Means for Clearing the Discharge Hose. - Metering systems may be equipped with systems specifically designed to facilitate clearing of the discharge hose prior to delivery to avoid product contamination. In such systems, a valve to temporarily divert product from the measuring chamber of the meter to a storage tank, shall be installed only if:

(a) The discharge hose remains of the wet hose type; and

(b) the valve and associated piping are approved by the weights and measures authority having jurisdiction over the device prior to commercial use; and

(c) the valve is permanently marked with its purpose (e.g., flush valve); and

(d) the valve is installed in a conspicuous manner and as far from the hose reel as practical; and

(e) the system clearly and automatically indicates the direction of product flow during operation of the flush system; and

(f) clear means, such as an indicator light or audible alarm, is used to identify when the valve is in use **on both quantity indications and any associated recorded representations (e.g., using such terms such as "flushing mode" or "not for commercial use); and**

(g) effective automatic means shall be provided to prevent passage of liquid through any such flush system during normal operation of the measuring system; and

(h) no hoses or piping are connected to the inlet when it is not in use.

Add a new paragraph UR.2.6.1. as follows and renumber paragraph UR.2.6.1. (assuming new paragraph UR.2.6.1. is adopted as shown) as follows:

UR.2.6. Clearing the Discharge Hose

UR.2.6.1. Clearing the Discharge Hose, General. - A manifold flush or similar system designed to assist in flushing product between deliveries is not to be used or operational during a commercial transaction. The inlet valves for the system are not to be connected to any hose or piping (dust covers are permitted) when not in use. When the flushing system is in operation, the discharge hose is only to be connected to the port for the product

This publication is available free of charge from: https://doi.org/10.6028/NIST.SP.1253

type being flushed from the discharge line. Following the flushing process, indications and recording elements must be reset to zero prior to beginning a commercial delivery.

(Added 20XX)

UR.2.6.2. Records. - Whenever, prior to delivery, a different product is pumped through the discharge hose to avoid contamination, a record including the date, time, original product, new product and gallons pumped shall be maintained. These records shall be kept and available for inspection by weights and measures for a period of 12 months

(Added 2018) (Amended 20XX)

8. S&T 2018 Carryover Items in Block 5 – Define Field Reference Standard

Item under Consideration: Amend paragraphs in the following codes and as shown in the table below.

B5: CLM-2	D	N.3.2. Transfer Standard Test and T.3. On Tests Using Transfer Standards
B5: CDL-2	D	N.3.2. Transfer Standard Test and T.3. On Tests Using Transfer Standards
B5: HGM-2	D	N.4.1. Master Meter (Transfer) Standard Test and T.4. Tolerance Application on Test Using Transfer Standard Test Method
B5: OTH-4	D	Appendix D – Definitions: field reference standard meter and transfer standard

B5: CLM-2 D N.3.2. Transfer Standard Test and T.3. On Tests Using Transfer Standards

Amend NIST Handbook 44, Cryogenic Liquid-Measuring Devices Code as follows:

N.3.2. Field Reference~~Transfer~~ Standard Meter Test. – When comparing a meter with a calibrated **field reference~~transfer~~** standard **meter**, the test draft shall be equal to at least the amount delivered by the device in two minutes at its maximum discharge rate, and shall in no case be less than 180 L (50 gal) or equivalent thereof. When testing uncompensated volumetric meters in a continuous recycle mode, appropriate corrections shall be applied if product conditions are abnormally affected by this test mode.

(Amended 1976 **and 20XX**)

T.3. On Tests Using Field Reference ~~Transfer~~ Standard~~s~~ Meters. – To the basic tolerance values that would otherwise be applied, there shall be added an amount equal to two times the standard deviation of the applicable **field reference~~transfer~~** standard **meter** when compared to a basic reference standard.

(Added 1976)

B5: CDL-2 D N.3.2. Transfer Standard Test and T.3. On Tests Using Transfer Standards

Amend NIST Handbook 44, Carbon Dioxide Liquid-Measuring Devices Code as follows:

N.3.2. Field Reference~~Transfer~~ Standard Meter Test. – When comparing a meter with a calibrated **field reference~~transfer~~** standard **meter**, the test draft shall be equal to at least the amount delivered by the device in two minutes at its maximum discharge rate.

(Amended 20XX)

T.3. On Tests Using Field Reference~~Transfer~~ Standard~~s~~ Meters. – To the basic tolerance values that would otherwise be applied, there shall be added an amount equal to two times the standard deviation of the applicable **field reference~~transfer~~** standard when compared to a basic **field reference~~reference~~** standard **meter**.

B5: HGM-2 D N.4.1. Master Meter (Transfer) Standard Test and T.4. Tolerance Application on Test Using Transfer Standard Test Method

This publication is available free of charge from: https://doi.org/10.6028/NIST.SP.1253

Amend NIST Handbook 44, Hydrogen Gas-Measuring Devices Tentative Code as follows:

N.4.1. Field Reference~~Master Meter (Transfer)~~ Standard Meter Test. – When comparing a measuring system with a calibrated **field reference~~transfer~~** standard **meter**, the minimum test shall be one test draft at the declared minimum measured quantity and one test draft at approximately ten times the minimum measured quantity or 1 kg, whichever is greater. More tests may be performed over the range of normal quantities dispensed.

(Amended 20XX)

T.4. Tolerance Application on Test Using Field Reference~~Transfer~~ Standard Meters Test Method. – To the basic tolerance values that would otherwise be applied, there shall be added an amount equal to two times the standard deviation of the applicable **field reference~~transfer~~** standard **meter** when compared to a basic reference standard.

B5: OTH-4 D Appendix D – Definitions: field reference standard meter and transfer standard

Amend NIST Handbook 44, Appendix D as follows:

field reference standard meter – A measurement system designed for use in proving and testing measuring devices and meters.

~~transfer standard – A measurement system designed for use in proving and testing cryogenic liquid measuring devices.~~

8. S&T 2018 Carryover Items in Block 7 – Address Devices and Systems Adjusted Using a Removable Digital Storage Device

Item under Consideration:
The Sector is asked to review and provide input on the following items under this block.

B7: GEN-2	D	G-S.8.2. Devices and Systems Adjusted Using Removable Digital Device Storage
B7: LMD-1	D	S.2.2. Provision for Sealing.
B7: VTM-2	D	S.2.2. Provision for Sealing.
B7: LPG-2	D	S.2.2. Provision for Sealing.
B7: HGV-1	D	S.2.2. Provision for Sealing.
B7: CLM-4	D	S.2.5. Provision for Sealing.
B7: MLK-1	D	S.2.3. Provision for Sealing.
B7: WTR-1	D	S.2.1. Provision for Sealing.
B7: MFM-1	D	S.3.5. Provision for Sealing.
B7: CDL-4	D	S.2.5. Provision for Sealing.
B7: HGM-3	D	S.3.3. Provision for Sealing.

B7: GEN-2 D G-S.8.2. Devices and Systems Adjusted Using Removable Digital Device Storage

Item Under Consideration:
Modify the General Code as follows. Note this version of the proposed paragraph includes updates recommended by the submitter at the 2018 NCWM Annual Meeting in response to comments from industry and others.

G-S.8.2. Devices and Systems Adjusted Using Removable Digital Storage Device. - For devices and systems in which the configuration or calibration parameters can be changed by use of a removable digital storage device*, such as a secure digital (SD) card, USB flash drive, etc., security shall be provided for those parameters using either (1) an event logger in the device; or (2) a physical seal that must be

This publication is available free of charge from: https://doi.org/10.6028/NIST.SP.1253

broken in order to remove the digital storage device from the device (or system). If security is provided using an event logger, the event logger shall include an event counter (000 to 999), the parameter ID, the date and time of the change, and the new value of the parameter. A printed copy of the information must be available on demand through the device or through another on-site device. In addition to providing a printed copy of the information, the information may be made available electronically. The event logger shall have a capacity to retain records equal to 10 times the number of sealable parameters in the device, but not more than 1000 records are required. (Note: Does not require 1000 changes to be stored for each parameter.)

***Applies only to removable digital storage devices that must remain in the device or system for it to be operational.**

(Added 20XX)

B7: LMD-1 D S.2.2. Provision for Sealing.

Item Under Consideration:
Modify the Liquid Measuring Devices Code as follows.

S.2.2. Provision for Sealing – **For devices and systems in which the configuration or calibration parameters can be changed by use of a removable digital storage device, security shall be provided for those parameters as specified in G-S.8.2. For parameters adjusted using other means, the following applies:**

Adequate provision shall be made for an approved means of security (e.g., data change audit trail) or for physically applying a security seal in such a manner that requires the security seal to be broken before an adjustment or interchange can be made of:

(a) any measuring or indicating element;

(b) any adjustable element for controlling delivery rate when such rate tends to affect the accuracy of deliveries; and

(c) any metrological parameter that will affect the metrological integrity of the device or system.

When applicable, the adjusting mechanism shall be readily accessible for purposes of affixing a security seal.

*[Audit trails shall use the format set forth in Table S.2.2.]**
*[*Nonretroactive and Enforceable as of January 1, 1995]*
(Amended 1991, 1993, 1995, 2006**,** and **20XX**)

B7: VTM-2 D S.2.2. Provision for Sealing.

Item Under Consideration:
Modify the Vehicle Tank Meters Code as follows.

S.2.2. Provision for Sealing. – **For devices and systems in which the configuration or calibration parameters can be changed by use of a removable digital storage device, security shall be provided for those parameters as specified in G-S.8.2. For parameters adjusted using other means, the following applies:**

Adequate provision shall be made for an approved means of security (e.g., data change audit trail) or for physically applying a security seal in such a manner that requires the security seal to be broken before a change

This publication is available free of charge from: https://doi.org/10.6028/NIST.SP.1253

or an adjustment or interchange may be made of:

(a) any measuring or indicating element;

(b) any adjustable element for controlling delivery rate when such rate tends to affect the accuracy of deliveries; and

(c) any metrological parameter that will affect the metrological integrity of the device or system.

When applicable, the adjusting mechanism shall be readily accessible for purposes of affixing a security seal. *[Audit trails shall use the format set forth in Table S.2.2. Categories of Device and Methods Sealing.]* [*Nonretroactive as of January 1, 1995]*

(Amended 2006 **and 20XX**)

B7: LPG-2 D S.2.2. Provision for Sealing.

Item Under Consideration: Modify the LPG and Anhydrous Ammonia Liquid-Measuring Devices Code as follows.

S.2.2. Provision for Sealing. For devices and systems in which the configuration or calibration parameters can be changed by use of a removable digital storage device, security shall be provided for those parameters as specified in G-S.8.2. For parameters adjusted using other means, the following applies:

Adequate provision shall be made for an approved means of security (e.g., data change audit trail) or for physically applying a security seal in such a manner that requires the security seal to be broken before an adjustment or interchange may be made of:

(a) any measuring or indicating element;

(b) any adjustable element for controlling delivery rate, when such rate tends to affect the accuracy of deliveries; and

(c) any metrological parameter that will affect the metrological integrity of the device or system.

When applicable, the adjusting mechanism shall be readily accessible for purposes of affixing a security seal.

*[Audit trails shall use the format set forth in Table S.2.2. Categories of Device and Methods of Sealing.]**
[*Nonretroactive as of January 1, 1995]
(Amended 2006 and 20XX)

B7: HGV-1 D S.2.2. Provision for Sealing.

Item Under Consideration:
Modify the Hydrocarbon Gas Vapor-Measuring Devices Code as follows.

S.2.2. Provision for Sealing. For devices or systems in which the configuration or calibration parameters can be changed by use of a removable digital storage device, security shall be provided for those parameters as specified in G-S.8.2. For parameters adjusted using other means, the following applies:

Adequate provision shall be made for applying security seals in such a manner that no adjustment or

This publication is available free of charge from: https://doi.org/10.6028/NIST.SP.1253

interchange may be made of any measurement element.

(Amended 20XX)

B7: CLM-4 D S.2.5. Provision for Sealing.

Item Under Consideration:
Modify Cryogenic Liquid-Measuring Devices Code as follows.

S.2.5. Provision for Sealing. – For devices or systems in which the configuration or calibration parameters can be changed by use of a removable digital storage device, security shall be provided for those parameters as specified in G-S.8.2. For parameters adjusted using other means, the following applies:

Adequate provision shall be made for an approved means of security (e.g., data change audit trail) or for physically applying a security seal in such a manner that requires the security seal to be broken before an adjustment or interchange may be made of:

(a) any measuring or indicating element;

(b) any adjustable element for controlling delivery rate when such rate tends to affect the accuracy of deliveries;

(c) any automatic temperature or density compensating system; and

(d) any metrological parameter that will affect the metrological integrity of the device or system.

When applicable, any adjusting mechanism shall be readily accessible for purposes of affixing a security seal.

[Audit trails shall use the format set forth in Table S.2.5. Categories of Device and Methods of Sealing]*[*Nonretroactive as of January 1, 1995]

(Amended 2006 **and 20XX**)

B7: MLK-1 D S.2.3. Provision for Sealing.

Item Under Consideration:
Modify Milk Meters Code as follows.

S.2.3. Provision for Sealing. – For devices and systems in which the configuration or calibration parameters can be changed by use of a removable digital storage device, security shall be provided for those parameters as specified in G-S.8.2. For parameters adjusted using other means, the following applies:

Adequate provision shall be made for an approved means of security (e.g., data change audit trail) or for physically applying a security seal in such a manner that requires the security seal to be broken before an adjustment or interchange may be made of any:

(a) measuring element or indicating element;

(b) adjustable element for controlling delivery rate, when such rate tends to affect the accuracy of deliveries; and

(c) metrological parameter that will affect the metrological integrity of the device or system.

This publication is available free of charge from: https://doi.org/10.6028/NIST.SP.1253

When applicable, the adjusting mechanism shall be readily accessible for purposes of affixing a security seal.

[Audit trails shall use the format set forth in Table S.2.3. Categories of Device and Methods of Sealing] [*Nonretroactive as of January 1, 1995]*

(Amended 2006 **and 20XX**)

B7: WTR-1 D S.2.1. Provision for Sealing.

Item Under Consideration:
Modify Water Meters Code as follows.

S.2.1. Provision for Sealing. – For devices or systems in which the configuration or calibration parameters can be changed by use of a removable digital storage device, security shall be provided for those parameters as specified in G-S.8.2. For parameters adjusted using other means, the following applies:

Adequate provision shall be made for applying security seals in such a manner that no adjustment or interchange may be made of:

(a) any measurement elements; and

(b) any adjustable element for controlling delivery rate when such rate tends to affect the accuracy of deliveries.

The adjusting mechanism shall be readily accessible for purposes of affixing a security seal.

(Amended 20XX)

B7: MFM-1 D S.3.5. Provision for Sealing.

Item Under Consideration:
Modify Mass Flow Meters Code as follows.

S.3.5. Provision for Sealing. – For devices or systems in which the configuration or calibration parameters can be changed by use of a removable digital storage device, security shall be provided for those parameters as specified in G-S.8.2. For parameters adjusted using other means, the following applies:

Adequate provision shall be made for an approved means of security (e.g., data change audit trail) or physically applying security seals in such a manner that no adjustment or interchange may be made of:

(a) any measuring or indicating element;

(b) any adjustable element for controlling delivery rate when such rate tends to affect the accuracy of deliveries;

(c) the zero adjustment mechanism; and

(d) any metrological parameter that will affect the metrological integrity of the device or system.

When applicable, the adjusting mechanism shall be readily accessible for purposes of affixing a security seal.

*[Audit trails shall use the format set forth in Table S.3.5. Categories of Device and Methods of Sealing]**
*[*Nonretroactive as of January 1, 1995]*
(Amended 1992, 1995, 2006**,** and **20XX**)

B7: CDL-4 D S.2.5. Provision for Sealing.

Item Under Consideration:
Modify Carbon Dioxide Liquid-Measuring Devices Code as follows.

S.2.5. Provision for Sealing. – For devices and systems in which the configuration or calibration parameters can be changed by use of a removable digital storage device, security shall be provided for those parameters as specified in G-S.8.2. For parameters adjusted using other means, the following applies:

Adequate provision shall be made for an approved means of security (e.g., data change audit trail) or for physically applying a security seal in such a manner that requires the security seal to be broken before an adjustment or interchange may be made of:

(a) any measuring or indicating element;

(b) any adjustable element for controlling delivery rate when such rate tends to affect the accuracy of deliveries;

(c) any automatic temperature or density compensating system; and

(d) any metrological parameter that will affect the metrological integrity of the device or system.

When applicable any adjusting mechanism shall be readily accessible for purposes of affixing a security seal.

*[Audit trails shall use the format set forth in Table S.2.5. Provision for Sealing]**
*[*Nonretroactive as of January 1, 1995]*
(Amended 2006 **and 20XX**)

B7: HGM-3 D S.3.3. Provision for Sealing.

Item Under Consideration:
Modify Hydrogen Gas-Measuring Devices Tentative Code as follows.

S.3.3. Provision for Sealing. – For devices and systems in which the configuration or calibration parameters can be changed by use of a removable digital storage device, security shall be provided for those parameters as specified in G-S.8.2. For parameters adjusted using other means, the following applies:

Adequate provision shall be made for an approved means of security (e.g., data change audit trail) or physically applying security seals in such a manner that no adjustment may be made of:

(a) each individual measurement element;

(b) any adjustable element for controlling delivery rate when such rate tends to affect the accuracy of deliveries;

This publication is available free of charge from: https://doi.org/10.6028/NIST.SP.1253

(c) the zero adjustment mechanism; and

(d) any metrological parameter that detrimentally affects the metrological integrity of the device or system.

When applicable, the adjusting mechanism shall be readily accessible for purposes of affixing a security seal. Audit trails shall use the format set forth in Table S.3.3. Categories of Device and Methods of Sealing.

(Amended 20XX)

This Appendix includes NCWM Form 15s with Proposals to the NCWM S&T Committee for the following Items:

- Section 3.30 LMD Code – Airport Refueling Systems.
- Section 3.30 LMD Code – Recognition of DEF and Other Products.
- Section 3.37 MFM Code – Location of Marking Information RMFDs.
- Section 3.37 MFM Code; Section 3.39 Hydrogen Gas-Measuring Devices Code; and 3.40 Electric Vehicle Fueling Systems Code – Automatic Timeout – RMFDs.
- Section 3.37 MFM Code – Maximum Unit Size for DGE & Delete Reference to GLE.
- Section 3.40 Electric Vehicle Fueling Systems Code – Definition – Power Factor.

This publication is available free of charge from: https://doi.org/10.6028/NIST.SP.1253

This publication is available free of charge from: https://doi.org/10.6028/NIST.SP.1253

THIS PAGE INTENTIONALLY LEFT BLANK

This publication is available free of charge from: https://doi.org/10.6028/NIST.SP.1253

National Conference on Weights and Measures / National Type Evaluation Program

Form 15: Proposal to Amend NIST Handbooks, Guidance Documents, NCWM Bylaws or NCWM Publication 14

General Information

1. Date: 08/22/2018	**2. Regional Association(s):** (Not applicable for proposals to the Board of Directors or NTEP Committee) _X_ Central (CWMA) _X_ Northeastern (NEWMA) _X_ Southern (SWMA) _X_ Western (WWMA)

3. Standing Committee:

__Laws & Regulations _X_ Specifications & Tolerances __Professional Development __Board of Directors __NTEP Committee

4. Submitter's Name: Office of Weights and Measures (OWM)	**Submitter's Organization:** National Institute of Standards and Technology

5. Address: 100 Bureau Drive.

6. City: Gaithersburg	**7. State: MD**	**8. Zip Code:** 20899	**9. Country: U.S.**

10. Phone Number: 410-975-4405	**11. Fax Number:**	**12. Email Address:** Diane.lee@nist.gov

Proposal Information

13. Purpose: Concise statement as to the intent or purpose of this proposal, such as problem being fixed. (Do not include justification here.)
Modify the Liquid Measuring Devices Code to address self-service airport fueling dispensing systems equipped with a primary analog indicator and a separate card activated console with a printer that are used to fuel multiple tanks on aircrafts.

14. Document to be Amended:
_X_ NIST Handbook 44 __ NIST Handbook 130 __ NIST Handbook 133 __ NCWM Guidance Document
__ NCWM Bylaws __NTEP Administrative Policy

15. Cite portion to be Amended: Please file a separate Form 15 for each code, model law or regulation to be amended.

Section: 3.30
Paragraph: Various paragraphs to include: G.S.5.2.2, S.1.6.3, S.2.5., and UR.3.1.

16. Proposal: Please use ~~**strikeout**~~ to show words to be deleted and **underline** to show new words.

A specific proposal is not yet ready for consideration. This item is requested as a "Developing" item to allow an opportunity for the community to provide input on possible approaches that could be used to solve this problem. Details of the issue are provided in the "Justification" below.

17. Justification: Please include national importance, background on the issue, and reference to supporting data or documents.

MN Weights and Measures informed NIST that, during an inspection prompted by a complaint of an overcharge, metering systems at a self-serve airport fueling facility failed to comply with NIST HB 44, Liquid Measuring Devices Code. Specifically, the systems did not comply with the following requirements in Handbook 44:

- S.2.5
- UR.3.1, and
- G-S.5.2.2.2

This publication is available free of charge from: https://doi.org/10.6028/NIST.SP.1253

These systems consist of one or more stationary meters, each of which is equipped with an individual analog indicator to register the fuel as it is delivered. These analog metering systems are interfaced with a central controller (typically located adjacent to the meters), which is used by the customer to activate an individual meter using a payment card such as a credit or debit card. The controller is also an indicator. After activating the transaction with a payment card, the customer delivers fuel using one of the individual metering systems interfaced to the controller. Each metering system is equipped with a mechanical reset, which is used by the customer to return the indications to a zero condition prior to delivery. Typically, customers will fill one receiving tank on an airplane and then, prior to filling the next tank on the plane, will use this reset feature to reset the indications to zero. This resetting action is not tracked by the controller.

When the customer is finished delivering product to all receiving tanks, he or she prints a receipt using the controller. The controller is not capable of ***indicating*** the quantity for either individual drafts or the total quantity delivered over the course of the transaction. The controller is not capable of ***printing*** the quantity for ***individual*** drafts; however, it does ***print*** the ***total*** quantity delivered over the course of the transaction and it calculates a total sale amount based on this quantity and a preprogrammed unit price. As a result, at the end of a delivery, if the customer has reset the analog meter indications during the course of the total delivery, the indicated quantity on the meter does not agree with the total quantity printed on the receipt.

After MN W&M rejected one of these systems for failing to comply with the provisions of NIST Handbook 44, the MN Department of Transportation (DOT) contacted both MN Weights and Measures (W&M) and NIST, OWM to ask for assistance in addressing these systems. Numerous systems of this type were installed as part of a grant to establish a network of fueling points across a geographic area. A key purpose was to provide a safety net, which allows pilots to more readily access fueling points in the event of low fuel. Thus, the operation of these systems represents a significant safety issue. Changes to these systems to gain compliance could prove so costly as to result in closure of many of these sites. Having just become aware of the requirements in HB 44 after the action by MN, MN DOT asked for assistance in developing proposed changes to HB 44 which might allow these systems to continue to operate.

MN DOT, MN Weights and Measures and OWM held a teleconference to review the requirements of Handbook 44 and the impact on these devices and agreed that a proposal with a developing status should be drafted and submitted for discussion at the 2018-2019 Regional meetings and the NCWM Interim meeting. OWM agreed to champion the item in its developing stage to help gather input which will help develop proposed changes to HB 44 that will best meet the needs of the community. A key goal is to identify requirements for how such systems need to operate to provide clear and transparent transaction information, without interrupting the service needed by consumers. A possible approach is to develop nonretroactive requirements which will apply to new systems and develop other requirements which will help existing systems move closer to compliance without significant cost or interruption to service.

In its review of this issue, NIST identified multiple other paragraphs in H44 which need to be considered as this proposal is developed. These include:

- G.S.2.
- S.1.6.3.
- S.1.6.5.6. (a)
- S..1.6.10.

NIST is still discussing options for these changes and are specifically discussing how to address systems currently in use and systems installed after a specific date. NIST, OWM has not developed a specific proposal, but wants to begin sharing this situation with officials, manufacturers, and users and allow an opportunity for input and discussion, beginning with the regional weights and measures associations and industry groups such as the Meter Manufacturers Association.

Plans are to have MN DOT available to provide information, and possibly a short presentation, on these devices at some of the Regional Weights and Measures Association meetings and/or the NCWM Interim Meeting. OWM's initial thoughts are to provide requirements such that:

(1) Indicated and recorded representations are able to display quantity of individual drafts and the total quantity dispensed for the transaction and each clearly identified (e.g., "draft 1", "draft 2," "draft 3," etc. along with "total quantity."

(2) Permit use in self-serve operations.

(3) Include individual and totalized displays which are visible to the customer during the transaction.

(4) Ensure clear instructions are provided (possibly elaborating on current instructions).

(5) Ensure agreement between printed ticket and primary indicator.

(6) Ensure quantities are appropriately identified (e.g., "total quantity" vs. "draft 1").

In addition, consideration might be given to applying all these requirements to new systems while allowing current systems to only meet some of them (e.g., items 2, 3, and 4,) or to be given an extended time frame after which they must meet all requirements. This could be done with a combination of nonretroactive and retroactive requirements.

18. Possible Opposing Argument's: Please demonstrate that you are aware and have considered possible opposition.
The State of Minnesota inspected these systems because of a complaint from a customer who stated that 8 gallons of fuel was purchased but he was charged for 12 gallons. Allowing continued operation without changes to the systems or which exempt them from all current requirements for agreement and clarity might result in additional complaints and customer confusion and, thus may lead to possible safety concerns.

Providing exemptions to current requirements for these systems may be perceived as unfair treatment to other systems used in similar applications. For example, retail motor-fuel dispensers in a service station interfaced with a console/controller; vehicle-mounted metering systems interfaced with a controller, and loading-rack metering systems interfaced with a centralized controller.

Pilots represented by the Aircraft Owners and Pilot Associations(AOPA), State Aviation Administrations, FAA, Operators of small regional airports, particularly businesses, do not necessarily oppose the requirements of NIST Handbook 44 or good measurement practices, but they are very concerned that the cost of any corrections should not be so large that it forces small airports to abandon fueling services thereby threatening the network of regional airports which support small aircraft. These airports provide a safety net in case of emergencies. Additionally, for physical and environmental safety, having aviation fuel stored and dispensed through a central service at small airports is preferable to pilots bringing fuel into airports or storing it in their hangars.

19. Requested Action if Considered for NCWM Agenda:

20. List of Attachments:

This publication is available free of charge from: https://doi.org/10.6028/NIST.SP.1253

This publication is available free of charge from: https://doi.org/10.6028/NIST.SP.1253

National Conference on Weights and Measures / National Type Evaluation Program

Form 15: Proposal to Amend NIST Handbooks, Guidance Documents, NCWM Bylaws or NCWM Publication 14

General Information

1. Date: 8-24-2018	**2. Regional Association(s):** (Not applicable for proposals to the Board of Directors or NTEP Committee) _x_ Central (CWMA) _x_ Northeastern (NEWMA) _x_ Southern (SWMA) _x_ Western (WWMA)

3. Standing Committee:

__Laws & Regulations _x_ Specifications & Tolerances __Professional Development __Board of Directors __NTEP Committee

4. Submitter's Name: G. Diane Lee/Tina Butcher	**Submitter's Organization: NIST, Office of Weights and Measures**

5. Address: 100 Bureau Drive

6. City: Gaithersburg	**7. State: MD**	**8. Zip Code: 20899**	**9. Country: U.S.**

10. Phone Number: 301-975-4405 / 301-975-2196	**11. Fax Number:** 301-975-8001	**12. Email Address:** diane.lee@nist.gov / tina.butcher@nist.gov

Proposal Information

13. Purpose: Concise statement as to the intent or purpose of this proposal, such as problem being fixed. (Do not include justification here.)
Modify the Liquid Measuring Devices Code to adequately address requirements for retail liquid measuring devices that measure DEF and other products.

14. Document to be Amended:
_x_ NIST Handbook 44 __ NIST Handbook 130 __ NIST Handbook 133 __ NCWM Guidance Document
__ NCWM Bylaws __NTEP Administrative Policy

15. Cite portion to be Amended: Please file a separate Form 15 for each code, model law or regulation to be amended.

Section: 3.30
Paragraphs: A.1., S.1.6.10, S.2.5., S.4.4.1, S.4.4.2, S.5, N.4.2.2., UR.2.4, UR.3.5.

16. Proposal: Please use ~~**strikeout**~~ to show words to be deleted and **underline** to show new words.
Modify the Liquid Measuring Devices (LMD) Code as follows:

A.1. General. – This code applies to:

(a) devices used for the measurement of liquids, ~~including liquid fuels and lubricants,~~ and

(b) wholesale devices used for the measurement and delivery of agri-chemical liquids such as fertilizers, feeds, herbicides, pesticides, insecticides, fungicides, and defoliants.
(Added 1985)

S.1.6.10. Automatic Timeout – Pay-At-Pump <u>for</u> Retail ~~Motor-Fuel~~ Devices. – *Once a device has been authorized, it must de-authorize within two minutes if not activated. Re-authorization of the device must be performed before any product can be dispensed. If the time limit to de-authorize the device is programmable, it shall not accept an entry greater than two minutes*
[Nonretroactive as of January 1, 2017]

This publication is available free of charge from: https://doi.org/10.6028/NIST.SP.1253

(Added 2016) (Amended 20XX)

S.2.5. Zero-Set-Back Interlock, for Retail ~~Motor-Fuel~~ Devices – A device shall be constructed so that:

(a) after a delivery cycle has been completed by moving the starting lever to any position that shuts off the device, an automatic interlock prevents a subsequent delivery until the indicating elements, and recording elements if the device is equipped and activated to record, have been returned to their zero positions;

(b) the discharge nozzle cannot be returned to its designed hanging position (that is, any position where the tip of the nozzle is placed in its designed receptacle and the lock can be inserted) until the starting lever is in its designed shut-off position and the zero-set-back interlock has been engaged; and

(c) in a system with more than one dispenser supplied by a single pump, an effective automatic control valve in each dispenser prevents product from being delivered until the indicating elements on that dispenser are in a correct zero position.

(Amended 1981~~, and~~ 1985, and 20XX)

S.4.4.1. Discharge Rates *– On a retail device with a designed maximum discharge rate of 115 L (30 gal) per minute or greater, the maximum and minimum discharge rates shall be marked in accordance with S.4.4.2. Location of Marking Information; Retail ~~Motor-Fuel~~ Dispensers. The marked minimum discharge rate shall not exceed 20 % of the marked maximum discharge rate.*
[Nonretroactive as of January 1, 1985]
(Added 1984) (Amended 2003 and 20XX)

S.4.4.2. Location of Marking Information; for Retail ~~Motor-Fuel~~ Dispensers. *– The marking information required in the General Code, paragraph G-S.1. Identification shall appear as follows:*

(a) within 60 cm (24 in) to 150 cm (60 in) from the base of the dispenser for system in a dispenser;

(b) either internally and/or externally provided the information is permanent and easily read; and

(c) on a portion of the device that cannot be readily removed or interchanged (i.e., not on a service access panel).

Note: *The use of a dispenser key or tool to access internal marking information is permitted for retail liquid-measuring devices.*
[Nonretroactive as of January 1, 2003]
(Added 2002) (Amended 2004 and 20XX)

....

S.5. Totalizers for Retail ~~Motor-Fuel~~ Dispensers. *– Retail ~~motor fuel~~ dispensers shall be equipped with a non-resettable totalizer for the quantity delivered through the metering device.*
[Nonretroactive as of January 1, 1995]
(Added 1993) (Amended 1994 and 20XX)

…

N.4.2.2. Retail Motor-Fuel and DEF Devices.

(a) Devices without a marked minimum flow-rate shall have a "special" test performed at the slower of the following rates:

(1) 19 L (5 gal) per minute; or

This publication is available free of charge from: https://doi.org/10.6028/NIST.SP.1253

(2) the minimum discharge rate at which the device will deliver when equipped with an automatic discharge nozzle set at its slowest setting.

(b) Devices with a marked minimum flow-rate shall have a "special" test performed at or near the marked minimum flow rate.

(Added 1984) (Amended 2005 and 20XX)

UR.2.4. Diversion of Liquid Flow. – A ~~motor-fuel~~ device equipped with two delivery outlets used exclusively in the fueling of trucks shall be so installed that any diversion of flow to other than the receiving vehicle cannot be readily accomplished and is readily apparent. Allowable deterrents include, but are not limited to, physical barriers to adjacent driveways, visible valves, or lighting systems that indicate which outlets are in operation, and explanatory signs.
(Amended 1991 and 20XX)

UR.2.5. Product Storage Identification.

(a) The fill connection for any petroleum product or other product storage tank or vessel supplying petroleum product or other products ~~motor-fuel devices~~ shall be permanently, plainly, and visibly marked as to product contained.

…

(Added 1975) (Amended 1976, and 20XX)

17. Justification: Please include national importance, background on the issue, and reference to supporting data or documents.

Diesel exhaust fluid (DEF) is a solution of urea and deionized water. It is used as an additive to diesel exhaust systems to lower the Nitrous Oxide (NOx) concentration in the diesel exhaust emissions from diesel engines. It is sold as a packaged product or dispensed using a liquid-measuring system. When sold in direct sales to retail customers, it is often dispensed directly into the customer's vehicle using a liquid-measuring device or system similar to or identical in design to a retail motor-fuel dispenser and in the same type of retail environment. The LMD Code includes a number of paragraphs designed to help ensure transparency in transactions and deter facilitation of fraud in the retail environment. However, many of these paragraphs are currently limited to retail "motor-fuel" applications and DEF is not a motor fuel.

These paragraphs in the LMD Code that specifically apply to retail ***motor-fuel*** devices, should also apply to DEF and possibly other retail liquid measuring devices that measure products other than motor fuels. The NCWM has already recognized that requirements designed to ensure measurement accuracy and transparency shouldn't be limited to motor-fuel applications only and similar proposals to extend some of these requirements (e.g., zero-setback interlock and timeout features) to devices in other codes have already been adopted or are being considered by the NCWM for other retail measuring applications. As such, appropriate sections of the LMD Code must be modified so that these requirements are not restricted to devices that measure motor fuel.

18. Possible Opposing Argument's: Please demonstrate that you are aware and have considered possible opposition.

Many DEF dispensing applications use the same type of dispensing systems as do retail motor-fuel applications and, thus, may already comply with the proposed changes. However, there may be other types of DEF measuring systems which do not currently comply with the proposed changes. [NOTE: Information regarding this question will likely emerge during the vetting of the initial proposal and can be updated at that point. Additional concerns may also emerge during the vetting process and need to be included in this section.]

19. Requested Action if Considered for NCWM Agenda:

___ Voting Item _x_ Developing Item ___ Informational Item ___ Other (Please Describe):

20. List of Attachments:
None

This publication is available free of charge from: https://doi.org/10.6028/NIST.SP.1253

This publication is available free of charge from: https://doi.org/10.6028/NIST.SP.1253

National Conference on Weights and Measures / National Type Evaluation Program

Form 15: Proposal to Amend NIST Handbooks, Guidance Documents, NCWM Bylaws or NCWM Publication 14

General Information

1. Date: 08/30/18	**2. Regional Association(s):** (Not applicable for proposals to the Board of Directors or NTEP Committee) _X_ Central (CWMA) _X_ Northeastern (NEWMA) _X_ Southern (SWMA) _X_ Western (WWMA)

3. Standing Committee:

__Laws & Regulations _X_ Specifications & Tolerances __Professional Development __Board of Directors __NTEP Committee

4. Submitter's Name:	**Submitter's Organization:**
Juana Williams	NIST Office of Weights & Measures (OWM)

5. Address:
100 Bureau Dr. MS2600

6. City:	**7. State:**	**8. Zip Code:**	**9. Country:**
Gaithersburg	MD	20899	USA

10. Phone Number:	**11. Fax Number:**	**12. Email Address:**
301-975-3989	301-975-8091	juana.williams@nist.gov

Proposal Information

13. Purpose: Concise statement as to the intent or purpose of this proposal, such as problem being fixed. (Do not include justification here.):
Extend the NIST Handbook 44 Mass Flow Meters Code provision allowing the use of a key or tool for accessing internal required markings for *liquid* retail motor-fuel dispensers to include retail motor-fuel dispensers delivering *compressed gases*.

14. Document to be Amended:
_X_ NIST Handbook 44 __ NIST Handbook 130 __ NIST Handbook 133 __ NCWM Guidance Document
__ NCWM Bylaws __ NTEP Administrative Policy

15. Cite portion to be Amended: Please file a separate Form 15 for each code, model law or regulation to be amended.

Section: 3.37. Mass Flow Meters Code
Paragraph: S.5.1. Location of Marking Information; Retail Motor-Fuel Dispenser; Note

16. Proposal: Please use ~~**strikeout**~~ to show words to be deleted and **underline** to show new words.

S.5.1. Location of Marking Information; Retail Motor-Fuel Dispensers. *– The marking information required in General Code, paragraph G-S.1. Identification shall appear as follows:*

(a) within 60 cm (24 in) to 150 cm (60 in) from the base of the dispenser;

(b) either internally and/or externally provided the information is permanent and easily read; and

(c) on a portion of the device that cannot be readily removed or interchanged (i.e., not on a service access panel).

Note: *The use of a dispenser key or tool to access internal marking information is permitted for retail liquid and compressed gas-measuring devices.*
[Nonretroactive as of January 1, 2003]
(Added 2006) **(Amended 2019)**

This publication is available free of charge from: https://doi.org/10.6028/NIST.SP.1253

National Conference on Weights and Measures / National Type Evaluation Program

Form 15: Proposal to Amend NIST Handbooks, Guidance Documents, NCWM Bylaws or NCWM Publication 14

General Information

1. Date: 08/29/18	**2. Regional Association(s):** (Not applicable for proposals to the Board of Directors or NTEP Committee) _X_ Central (CWMA) _X_ Northeastern (NEWMA) _X_ Southern (SWMA) _X_ Western (WWMA)

3. Standing Committee:

__Laws & Regulations _X_ Specifications & Tolerances __Professional Development __Board of Directors __NTEP Committee

4. Submitter's Name: Juana Williams	**Submitter's Organization: NIST Off. of Wgts. & Meas. (OWM)**		
5. Address: 100 Bureau Dr. MS2600			
6. City: Gaithersburg	**7. State: MD**	**8. Zip Code: 20899**	**9. Country: USA**
10. Phone Number: 301-975-3989	**11. Fax Number:** 301-975-8091	**12. Email Address:** juana.williams@nist.gov	

Proposal Information

13. Purpose: Concise statement as to the intent or purpose of this proposal, such as problem being fixed. (Do not include justification here.)

To prevent the facilitation of fraud on a vehicle fueling system equipped with the capability for authorization of a transaction by a credit card, debit card, or cash.

14. Document to be Amended:

_X_ NIST Handbook 44 __ NIST Handbook 130 __ NIST Handbook 133 __ NCWM Guidance Document
__ NCWM Bylaws __NTEP Administrative Policy

15. Cite portion to be Amended: Please file a separate Form 15 for each code, model law or regulation to be amended.

Section: 3.37 Mass Flow Meters
Paragraph: New paragraph S.2.9. Automatic Timeout – Pay-At-Retail Motor-Fuel Devices
Section: 3.39 Hydrogen Gas-Measuring Devices – Tentative Code
Paragraph: New paragraph S.2.8. Automatic Timeout – Pay-At-Vehicle Fuel Dispensers
Section: 3.40. Electric Vehicle Fueling Systems – Tentative Code
Paragraph: New paragraph S.2.8. Automatic Timeout – Pay-At-EVSE

16. Proposal: Please use ~~**strikeout**~~ to show words to be deleted and **underline** to show new words.

Section: 3.37 Mass Flow Meters

S.2.8. Automatic Timeout – Pay-At-Retail Motor-Fuel Devices. – *Once a retail motor-fuel device has been authorized, it must de-authorize within two minutes if not activated. Re-authorization of the retail motor-fuel device must be performed before product is delivered. If the time limit to de-authorize the retail motor-fuel device is programmable, it shall not accept an entry greater than two minutes.*

[Nonretroactive as of January 1, 2020]

(Added 2019)

Section: 3.39 Hydrogen Gas-Measuring Devices – Tentative Code

This publication is available free of charge from: https://doi.org/10.6028/NIST.SP.1253

S.2.8. Automatic Timeout – Pay-At-Vehicle Fuel Dispensers. − *Once a vehicle fuel dispenser has been authorized, it must de-authorize within two minutes if not activated. Re-authorization of the vehicle fuel dispenser must be performed before any product is delivered. If the time limit to de-authorize the vehicle fuel dispenser is programmable, it shall not accept an entry greater than two minutes.*
[Nonretroactive as of January 1, 2020]
(Added 2019)

Section: 3.40. Electric Vehicle Fueling Systems – Tentative Code
S.2.8. Automatic Timeout – Pay-At-EVSE. − *Once an EVSE has been authorized, it must de-authorize within two minutes if not activated. Re-authorization of the EVSE must be performed before any electrical energy is delivered and/or timing charges assessed. If the time limit to de-authorize the EVSE is programmable, it shall not accept an entry greater than two minutes.*
[Nonretroactive as of January 1, 2020]
(Added 2019)

17. Justification: Please include national importance, background on the issue, and reference to supporting data or documents.

There is great concern about the proper operation of fueling systems when customers use payment cards (e.g., credit and debit) to purchase fuel and the potential for accidental or intentional fraud created by the use of this payment feature. General Code paragraph G-S.2. Facilitation of Fraud can be applied to the use of these features; however, the proposed paragraph provides more specific guidance to manufacturers, regulatory officials, and users about how this transaction feature needs to operate.

The proposed paragraph draws on interpretations and procedures used in NTEP evaluations and laid out in the NCWM Publication 14 checklists and test procedures. Although device specific design requirements for this feature are not part of NIST Handbook (HB) 44 Sections: 3.37 Mass Flow Meters Code; 3.39 Hydrogen Gas-Measuring Devices – Tentative Code; and 3.40 Electric Vehicle Fueling Systems – Tentative Code, NTEP has evaluated this feature based on interpretations of General Code, paragraph G-S.2. Facilitation of Fraud for a number of years. Although this proposal is for a nonretroactive requirement with a January 1, 2020 enforcement date; General Code paragraph G-S.2 will continue to apply to all devices, and the proposed new device specific code paragraphs will more clearly spell out options for avoiding fraudulent use of the card authorization feature for devices manufactured after the effective date.

This proposal will also align language in Sections 3.37, 3.39, and 3.40 with a time-out feature requirement that was added to the HB 44 Section 3.30 Liquid-Measuring Devices Code in 2016. A similar requirement is also included in the Vehicle-Tank Meters Code that requires an automatic end to a transaction after a specified period of inactivity (no product flow) during individual deliveries.

18. Possible Opposing Argument's: *Please demonstrate that you are aware and have considered possible opposition.*

Other communication devices such as cell phones may be available for activation of the transaction that were not included in the proposal. This proposal is intended to more thoroughly address any card and cash activated fueling systems since this feature is already in the marketplace. The community may need additional time to assess the capabilities and operation of other technologies being used for transaction activation to ensure a full understanding of its operation and to be able to arrive at a strategy to address these next generation device features.

19. Requested Action if Considered for NCWM Agenda:

X Voting Item ___ Developing Item ___ Informational Item ___ Other (Please Describe):

20. List of Attachments: N/A

This publication is available free of charge from: https://doi.org/10.6028/NIST.SP.1253

National Conference on Weights and Measures / National Type Evaluation Program

Form 15: Proposal to Amend NIST Handbooks, Guidance Documents, NCWM Bylaws or NCWM Publication 14

General Information

1. Date: 08/30/18

2. Regional Association(s): (Not applicable for proposals to the Board of Directors or NTEP Committee)
_X_ Central (CWMA) _X_ Northeastern (NEWMA) _X_ Southern (SWMA) _X_ Western (WWMA)

3. Standing Committee:
__Laws & Regulations _X_ Specifications & Tolerances __Professional Development __Board of Directors __NTEP Committee

4. Submitter's Name: Juana Williams

Submitter's Organization: NIST Office of Weights & Measures (OWM)

5. Address: 100 Bureau Dr. MS2600

6. City: Gaithersburg

7. State: MD

8. Zip Code: 20899

9. Country: USA

10. Phone Number: 301-975-3989

11. Fax Number: 301-975-8091

12. Email Address: juana.williams@nist.gov

Proposal Information

13. Purpose: Concise statement as to the intent or purpose of this proposal, such as problem being fixed. (Do not include justification here.)
Delete the reference to "gasoline liter equivalent (GLE)" since that term that was removed from all Mass Flow Meters Code requirements in 2016. Clarify and limit the maximum value of the quantity division for indicated and recorded deliveries in the diesel gallon equivalent (DGE) to an increment of 0.001.

14. Document to be Amended:
_X_ NIST Handbook 44 __ NIST Handbook 130 __ NIST Handbook 133 __ NCWM Guidance Document
__ NCWM Bylaws __NTEP Administrative Policy

15. Cite portion to be Amended: Please file a separate Form 15 for each code, model law or regulation to be amended.

Section: 3.37. Mass Flow Meters Code
Paragraph: S.1.3.3.(b) Maximum Value of Quantity-Value Divisions.

16. Proposal: Please use ~~**strikeout**~~ to show words to be deleted and **underline** to show new words.

S.1.3.3. Maximum Value of Quantity-Value Divisions.

(a) The maximum value of the quantity-value division for liquids shall not be greater than 0.2 % of the minimum measured quantity.

(b) For dispensers of compressed natural gas used to refuel vehicles, the value of the division for the ~~**gasoline liter equivalent shall not exceed 0.01 GLE; the division for**~~ gasoline gallon equivalent (GGE) shall not exceed 0.001 GGE**; the division for the diesel gallon equivalent (DGE) shall not exceed 0.001 DGE**. **Dispensers of liquefied natural gas used to refuel vehicles; the value of the division for the DGE shall not exceed 0.001 DGE. For dispensers of either fuel;** ~~**T**~~the maximum value of the mass division shall not exceed 0.001 kg or 0.001 lb.

(Amended 1994 **and 2019**)

17. Justification: Please include national importance, background on the issue, and reference to supporting data or documents.
In 2016, the NCWM concluded three years of discussions about HB 44 Mass Flow Meters Code applications that address the sale of natural gas as a vehicle fuel. At that time, the NCWM agreed to eliminate the unit of "gasoline liter equivalent (GLE)." Although the GLE was removed from paragraphs S.1.3.1.1. Compressed Natural Gas Used as an Engine Fuel and S.5.2.

This publication is available free of charge from: https://doi.org/10.6028/NIST.SP.1253

Marking of Gasoline Volume Equivalent Conversion Factor, the unit was inadvertently overlooked for removal from paragraph S.1.3.3.(b) Maximum Value of Quantity-Value Divisions.

Also in 2016, the NCWM agreed to recognize mass; a *new* unit of measurement the diesel gallon equivalent (DGE); and sales of the commodity "liquefied natural gas (LNG)" for indicated deliveries. The DGE is an approximate volume unit derived from the energy content of a gallon of diesel fuel. Unlike all other vehicle fuel quantity units in HB 44 no requirement was published establishing a suitable limit on the maximum division value for indicated or recorded deliveries of CNG and LNG in DGE units. The maximum quantity value division is prescribed for retail vehicle fuel deliveries in units of the gallon, the kilogram or pound, as well as the gasoline gallon equivalent or GGE (i.e., in increments not greater than 0.001) in HB44. The factor specified for converting LNG and CNG mass to volume equivalent units is fixed and assigned a numerical value out to three decimal places.

A 0.001 increment needs to be assigned as the maximum allowable value of the DGE to avoid difficulties in calculating the total sale for each transaction. During the exhaustive deliberations and poring through countless pages documenting these discussions, an agreement on the maximum value for the DGE's quantity-value division was inadvertently overlooked. Consequently, this proposal is being submitted to clarify and limit the maximum value of the quantity division for indicated and recorded deliveries in the DGE to a 0.001 increment.

18. Possible Opposing Argument's: Please demonstrate that you are aware and have considered possible opposition.

None at this time since both modifications to paragraph S.1.3.3.(b) are considered housekeeping items. One that removes a unit of measurement that ceased to be recognized for natural gas sales; and one that corrects the omission of a specification that specifies the maximum quantity value for the DGE as one of four measurement units recognized for natural gas vehicle fuel applications in the Mass Flow Meters Code.

19. Requested Action if Considered for NCWM Agenda:

X Voting Item ___ Developing Item ___ Informational Item ___ Other (Please Describe):

20. List of Attachments:

N/A

This publication is available free of charge from: https://doi.org/10.6028/NIST.SP.1253

National Conference on Weights and Measures / National Type Evaluation Program

Form 15: Proposal to Amend NIST Handbooks, Guidance Documents, NCWM Bylaws or NCWM Publication 14

General Information

1. Date: 8/30/18	**2. Regional Association(s):** (Not applicable for proposals to the Board of Directors or NTEP Committee) _X_ Central (CWMA) _X_ Northeastern (NEWMA) _X_ Southern (SWMA) _X_ Western (WWMA)

3. Standing Committee:

__Laws & Regulations _X_ Specifications & Tolerances __Professional Development __Board of Directors __NTEP Committee

4. Submitter's Name:	**Submitter's Organization:**
Tina G. Butcher	NIST Office of Weights and Measures

5. Address:
100 Bureau Dr. MS 2600

6. City:	**7. State:**	**8. Zip Code:**	**9. Country:**
Gaithersburg	MD.	20899	USA

10. Phone Number:	**11. Fax Number:**	**12. Email Address:**
(301) 975-2196	(301) 975-8091	tbutcher@nist.gov

Proposal Information

13. Purpose: Concise statement as to the intent or purpose of this proposal, such as problem being fixed. (Do not include justification here.)

To simplify the definition for "Power Factor" currently included in NIST Handbook 44 (HB44) Section 3.40. Electric Vehicle Fueling Systems – Tentative Code. To align the current HB 44 definition with a definition included in a proposal to adopt a "Method of Sale" requirement for electric watt hour meters that is currently under consideration by the NCWM Laws & Regulations Committee.

14. Document to be Amended:
_X_ NIST Handbook 44 __ NIST Handbook 130 __ NIST Handbook 133 __ NCWM Guidance Document
__ NCWM Bylaws __NTEP Administrative Policy

15. Cite portion to be Amended: Please file a separate Form 15 for each code, model law or regulation to be amended.

Section: 3.40.
Paragraph: Definitions Section (at the end of the tentative code)

16. Proposal: Please use ~~**strikeout**~~ to show words to be deleted and **underline** to show new words.
power factor (PF). – The ratio of ~~**the**~~ **"**active power**"** to ~~**the**~~ **"**apparent power**"** in an AC circuit. ~~**The power factor is a number between 0 and 1 that is equal to 1 when the voltage and current are in phase (load is entirely resistive).**~~ **It describes the efficient use of available power.** [3.40]

17. Justification: Please include national importance, background on the issue, and reference to supporting data or documents.

The USNWG on Electric Vehicle Fueling & Submetering's Electric Watthour Subgroup (EWH SG) has developed a proposal to for a new provision in NIST Handbook 130's Uniform Regulation for the Method of Sale (MOS) of Commodities to address the sale of electrical energy through electric watt hour meters. In the process of developing this draft (and a still-

under-development NIST Handbook 44 code for these devices), the SG developed a definition for "power factor" that differs from the definition currently included in Section 3.40. Electric Vehicle-Fueling Systems – Tentative Code.

The SG, which includes many of the same experts involved in the development of Section 3.40 and which consulted other industry standards in the development of this proposal, believes the definition shown in the "proposal" section of this form is equivalent to that in the current Section 3.40. However, the new definition is simpler and eliminates possible confusion about its application in instances in which there are negative values. To avoid confusion about whether the two definitions are equivalent, it is desirable to align the definitions in Section 3.40 with that in the draft MOS proposal (and ultimately any definition proposed in a future code for electric watt hour meters).

18. Possible Opposing Argument's: Please demonstrate that you are aware and have considered possible opposition.

None that are known.

19. Requested Action if Considered for NCWM Agenda:

_X_ Voting Item ___ Developing Item ___ Informational Item ___ Other (Please Describe):

20. List of Attachments:

This publication is available free of charge from: https://doi.org/10.6028/NIST.SP.1253

National Conference on Weights and Measures / National Type Evaluation Program

Measuring Sector Attendee List Final

September 25-26, 2018 / Baltimore, Maryland

Tina Butcher
NIST, Office of Weights and Measures
100 Bureau Drive, MS 2600
Gaithersburg, MD 21702
P. (301) 975-2196
E. tbutcher@nist.gov

Marc Buttler
Micro Motion
7070 Winchester Circle
Boulder, CO 80301
P. (303) 581-1970
E. marc.buttler@emerson.com

Craig Cavanaugh
Tuthill Transfer Systems
8825 Aviation Drive
Fort Wayne, IN 46809
P. (260) 747-7599
E. ccavanaugh@tuthill.com

Rodney Cooper
Brodie International
P.O. Box 450
Statesboro, GA 30459
P. (912) 489-0262
E. rodney.cooper@brodieintl.com

Ron Gallon
Zenner Performance Meters, Inc.
1910 E. Westward Avenue
P.O. Box 895
Banning, CA 92220
P. (951) 849-8822 x 301
E. rgallon@zennerusa.com

Teri Gulke
Liquid Controls
105 Albrecht Drive
Lake Bluff, IL 60044
P. (847) 283-8346
E. tgulke@idexcorp.com

Michael Keilty
Endress + Hauser Flowtec AG
2441 Arapaho Road
Estes Park, CO 80517
P. (317) 701-0823
E. michael.keilty@us.endress.com

Rich Miller
TechnipFMC
1602 Wagner Avenue
Erie, PA 16510
P. (814) 898-5286
E. rich.miller@technipfmc.com

Randy Moses
Wayne Fueling Systems
1000 E. Walnut Street
Heritage Campus, Suite 404
Perkasie, PA 18944
P. (215) 257-2759
E. randy.moses@doverfs.com

Robin Parsons
Parafour Innovations
2540 Shell Road, Suite C
Georgetown, TX 78628
P. (512) 639-9186
E. robin@parafour.com

Brent Price
Gilbarco Inc.
7300 W. Friendly Avenue
Greensboro, NC 27410
P. (336) 337-1695
E. brent.price@gilbarco.com

Justin Rae
Measurement Canada
151 Tunney's Pasture Driveway
Ottawa, ON K1A 0C9
P. (613) 617-6414
E. justin.rae@canada.ca

This publication is available free of charge from: https://doi.org/10.6028/NIST.SP.1253

Randy Ramsey
North Carolina Department of Agriculture
131 Carpenter Drive
Spruce Pine, NC 28777
P. (919) 218-3448
E. randy.ramsey@ncagr.gov

John Roach
California Division of Measurement Standards
6790 Florin Perkins Road
Sacramento, CA 95828
P. (916) 229-3456
E. john.roach@cdfa.ca.gov

Farhad Sharifi
Measurement Canada
151 Tunney's Pasture Driveway
Ottawa, ON K1A 0C9
P. (613) 410-1533
E. farhad.sharifi@canada.ca

Jim Truex
National Conference on Weights and Measures
1135 M Street, Suite 110
Lincoln, NE 68508
P. (740) 919-4350
E. jim.truex@ncwm.net

This publication is available free of charge from: https://doi.org/10.6028/NIST.SP.1253

Appendix E

National Type Evaluation Program (NTEP) Software Sector Summary

August 23, 2018

This publication is available free of charge from: https://doi.org/10.6028/NIST.SP.1253

INTRODUCTION

The charge of the National Type Evaluation Program (NTEP) Software Sector is important in providing appropriate type evaluation criteria for software-based weighing or measuring device based on specifications, tolerances and technical requirements of NIST Handbook 44 Section 1.10 General Code, Section 2 for weighing devices, Section 3 for liquid and vapor measuring devices, and Section 5 for taximeters, grain analyzers, and multiple dimension measuring devices. The Sector's recommendations are presented to the NTEP Committee each January for approval and inclusion in NCWM Publication 14 Technical Policy, Checklists, and Test Procedures for national type evaluation.

The Sector is also called upon occasionally for technical expertise in addressing difficult NIST Handbook 44 issues on the agenda of the National Conference on Weights and Measures (NCWM) Specifications and Tolerances (S&T) Committee. Sector membership includes industry, NTEP laboratory representatives, Technical Advisors and the NTEP Administrator. Meetings are held annually, or as needed and are open to all NCWM members and other registered parties.

Suggested revisions are shown in **bold face print** by ~~**striking out**~~ information to be deleted and **underlining** information to be added. Requirements that are proposed to be non-retroactive are printed in ***bold faced italics***.

TABLE A
TABLE OF CONTENTS

This publication is available free of charge from: https://doi.org/10.6028/NIST.SP.1253

Table B
Glossary of Acronyms and Terms

Acronym	Term	Acronym	Term
BIML	International Bureau of Legal Metrology	OIML	International Organization of Legal Metrology
CC	Certificate of Conformance	OWM	Office of Weights and Measures
EPO	Examination Procedure Outline	PDC	Professional Development Committee
NCWM	National Conference on Weights and Measures	S&T	Specifications and Tolerances Committee
NIST	National Institute of Standards and Technology	SMA	Scale Manufacturers Association
NTEP	National Type Evaluation Program	WELMEC	European Cooperation in Legal Metrology

Details of All Items
(In order by Reference Key)

1. Welcome

Since the Software Sector meeting was a joint meeting with the Weighing Sector, some time was set aside to meet and greet both new and familiar faces.

2. Status Reports – Related NCWM and International Activity

Attendees of the 2018 NCWM Interim and Annual Meetings were asked to share any relevant comments or discussion that took place during the open hearings or NCWM Standards and Tolerances (S&T) Committee working sessions. Results related to items on our Agenda were of particular focus.

Dr. Katya Delak, NIST, Office of Weights and Measures (OWM), provided a synopsis of international activity that relates to the work of the sector. (See Appendix B. NIST WMD Report on International Activity)

3. Joint Session Progress Report, Active Items of Mutual Interest

This is the second joint meeting of the Weighing and Software Sectors. To make sure we make the most of the time, a quick review of the agenda items from both Sectors will be held to identify those that require collaboration, so all participants have a solid foundation for discussion. As part of this review, items of particular importance or interest should be allocated more time during the joint session day.

4. Software Sector Presentation

There was a brief presentation outlining the problems the Sector had been asked to consider and some of the consensus that has been reached to date.

This publication is available free of charge from: https://doi.org/10.6028/NIST.SP.1253

CARRY-OVER ITEMS

5. Software Identification/Markings

Source:
NTEP Software Sector

Background:
*See the **2017 Software Sector Meeting Summary** for more background on this item.*

Since its inception, the Sector has wrestled with the issue of software identification and marking requirements. Numerous changes to the NIST HB44 language were attempted and though support for the concepts was expressed, resistance to specific language made the course difficult. Finally, in 2015 in a joint meeting with the Measuring Sector, some additional fine tuning on the recommended changes to G-S.1 was done and we felt we had addressed everyone's concerns and had language ready to be voted upon for adoption. The recommended language is below.

Amend NIST Handbook 44: G-S.1. Identification as follows:

G-S.1. Identification. – All equipment, except weights and separate parts necessary to the measurement process but not having any metrological effect**,** shall be clearly and permanently marked for the purposes of identification with the following information:

(a) the name, initials, or trademark of the manufacturer or distributor;

(b) a model identifier that positively identifies the pattern or design of the device;

(1) The model identifier shall be prefaced by the word "Model," "Type," or "Pattern." These terms may be followed by the word "Number" or an abbreviation of that word. The abbreviation for the word "Number" shall, as a minimum, begin with the letter "N" (e.g., No or No.). The abbreviation for the word "Model" shall be "Mod" or "Mod." Prefix lettering may be initial capitals, all capitals, or all lowercase.
[Nonretroactive as of January 1, 2003]
(Added 2000) (Amended 2001)

…

(*c*) *a nonrepetitive serial number, except for equipment with no moving or electronic component parts and* ~~***not-built-for-purpose software-based software devices***~~ ***software****;*
[Nonretroactive as of January 1, 1968]
(Amended 2003)

(1) The serial number shall be prefaced by words, an abbreviation, or a symbol, that clearly identifies the number as the required serial number.
[Nonretroactive as of January 1, 1986]

(2) Abbreviations for the word "Serial" shall, as a minimum, begin with the letter "S," and abbreviations for the word "Number" shall, as a minimum, begin with the letter "N" (e.g., S/N, SN, Ser. No., and S. No.).
[Nonretroactive as of January 1, 2001]

(*d*) the current software version or revision identifier for not-built-for-purpose software-based devices~~;~~ **manufactured as of January 1, 2004 and all software-based devices or equipment manufactured as of January 1, 2022;**
~~***[Nonretroactive as of January 1, 2004]***~~
(Added 2003) **(Amended 2017)**

This publication is available free of charge from: https://doi.org/10.6028/NIST.SP.1253

(1) The version or revision identifier shall be:

i. *prefaced by words, an abbreviation, or a symbol, that clearly identifies the number as the required version or revision;*
[Nonretroactive as of January 1, 2007]
(Added 2006)

Note: If the equipment is capable of displaying the version or revision identifier but is unable to meet the formatting requirement, through the NTEP type evaluation process, other options may be deemed acceptable and described in the CC.
(Added 2017)

ii. ***continuously displayed or be accessible via the display. Instructions for displaying the version or revision identifier shall be described in the CC. As an alternative, permanently marking the version or revision identifier shall be acceptable providing the device does not always have an integral interface to communicate the version or revision identifier.***
[Nonretroactive as of January 1, 2022]
(Added 2017)

…

(2) Abbreviations for the word "Version" shall, as a minimum, begin with the letter "V" and may be followed by the word "Number." Abbreviations for the word "Revision" shall, as a minimum, begin with the letter "R" and may be followed by the word "Number." The abbreviation for the word "Number" shall, as a minimum, begin with the letter "N" (e.g., No or No.). ***Prefix lettering may be initial capitals, all capitals, or all lowercase.***
[Nonretroactive as of January 1, 2007]
(Added 2006) (Amended 2017)

(e) a National Type Evaluation Program (NTEP) Certificate of Conformance (CC) *number or a corresponding CC Addendum Number for devices that have a CC.*

(1) The CC Number or a corresponding CC Addendum Number shall be prefaced by the terms "NTEP CC," "CC," or "Approval." These terms may be followed by the word "Number" or an abbreviation of that word. The abbreviation for the word "Number" shall, as a minimum, begin with the letter "N" (e.g., No or No.)
[Nonretroactive as of January 1, 2003]

The required information shall be so located that it is readily observable without the necessity of the disassembly of a part requiring the use of any means separate from the device. (Amended 1985, 1991, 1999, 2000, 2001, 2003, ~~**and,**~~ 2006 **and 2017**)

The amended proposal was accepted as a Voting item at the 2016 NCWM Interim Meeting and adopted at the 2016 NCWM Annual Meeting.

Since future work on this item depends on the expiration of the window for compliance (2022), the Sector agreed to table this item until 2020/2021, when we can again begin to discuss further modifications with the eventual goal of eliminating G-S.1.1. and the differentiation between built-for-purpose and not-built-for-purpose.

In July of 2016, the MDMD Work Group addressed some of these issues pertaining to software running on small devices such as phones that have very small screens. They discussed prioritization of what needed to be displayed, such as CC so that the remainder of the information can be looked up.

Discussion:
Members of both Sectors estimated the scope of work remaining and decided it is not necessary to start working on G-S.1 yet.

Conclusion:
This agenda item remains tabled until 2020.

6. Identification of Certified Software

Source:
NTEP Software Sector

Background:
*See the **2017 Software Sector Meeting Summary** for more background on this item.*

This item originated as an attempt to answer the question "How does the field inspector know that the software running in the device is the same software evaluated and approved by the lab?"

In 2010, the Sector recommended the following change to NIST Handbook 44, General Code: G-S.1(d) to add a new subsection (3):

(d) the current software version or revision identifier) the current software version or revision identifier for not-built-for-purpose software-based devices manufactured as of January 1, 2004 and all software-based devices or equipment manufactured as of January 1, 2022;
(Added 2003) (Amended 2016)

(1) The version or revision identifier shall be:

i. prefaced by words, an abbreviation, or a symbol, that clearly identifies the number as the required version or revision;
[Nonretroactive as of January 1, 2007]
(Added 2006)

***Note**: If the equipment is capable of displaying the version or revision identifier but is unable to meet the formatting requirement, through the NTEP type evaluation process, other options may be deemed acceptable and described in the CC.*
(Added 2016)

ii. continuously displayed or be accessible via the display. Instructions for displaying the version or revision identifier shall be described in the CC. As an alternative, permanently marking the version or revision identifier shall be acceptable providing the device does not always have an integral interface to communicate the version or revision identifier.
[Nonretroactive as of January 1, 2022]
(Added 2017)

….

(2) Abbreviations for the word "Version" shall, as a minimum, begin with the letter "V" and may be followed by the word "Number." Abbreviations for the word "Revision" shall, as a minimum, begin with the letter "R" and may be followed by the word "Number." The abbreviation for the word "Number" shall, as a minimum, begin with the letter "N" (e.g., No or No.). Prefix lettering may be initial capitals, all capitals, or all lowercase.
[Nonretroactive as of January 1, 2007]
(Added 2006) (Amended 2017)

This publication is available free of charge from: https://doi.org/10.6028/NIST.SP.1253

(3) The version or revision identifier shall be directly and inseparably linked to the software itself. The version or revision identifier may consist of more than one part, but at least one part shall be dedicated to the metrologically significant software.
[Nonretroactive as of January 1, 20XX]
(Added 20XX)

Also, the Sector recommended the following information be added to NCWM Publication 14 as explanation/examples:

- Unique identifier must be displayable/printable on command or during operation, etc.
- At a minimum, a version/revision indication (1.02.09, rev 3.0 a, etc.). Could also consist of/contain checksum, etc. (crc32, for example)

This original item was eventually withdrawn, and the proposal was split into two separate items. The critical need to include version/revision in the marking requirements for all software-based devices was pushed forward and passed independently.

In addition, the Sector considered the following information to be added to NCWM Publication 14 as explanation/examples:

- The current software identifier must be displayable/printable on command during operation (or made evident by other means deemed acceptable by G-S.1.)
- At a minimum, the software identifier must include a version/revision indication (1.02.09, rev 3.0 a, etc.). It could also consist of/contain checksum, etc. (crc32, for example).
- The version or revision identifier may consist of more than one part, but at least one part shall be dedicated to the metrologically significant software.

Other questions previously brought up that have not really been satisfied to date are:

- If we allow hard marking of the software identifier (the Sector has wavered on this in the past), does the above wording then imply that some mechanical means is required (i.e., physical seal) to "inseparably link" the identifier to the software?
- If a device is capable of doing so, does it still have to be able to display, print or communicate the identifier somehow, even if it is hard marked?

Regarding field inspection and locating the required information: The list of acceptable menu text and symbols in Appendix A are intended to assist the NTEP labs in finding the certification number. Members of the Software Sector noticed no action by the other sectors had been taken when this list was circulated for comment. We would like to remind them that we would like to have it reviewed. We feel that this belongs in, for example, the Weighing Device Publication 14, page DES-22, Section 3; the Belt – Conveyor Scales, page BCS-10, Section 8.7; the Measuring Devices, page LMD-21, Section 1.6; the Grain Moisture Meter, page GMM-14, Section 1 (G.S.1); and Near Infrared Grain Analyzers, page NIR-8, Section 1 (G.S.1).

Mrs. Tina Butcher (NIST OWM) mentioned that the Weighing Sector has a Weighing Checklist that has a similar set of approved symbols, so the examples shown in Appendix A would be in line with their current practice.

Since the recommended new G-S.1 language was voted on and adopted in 2016, we can now move forward on this item and consider adding to NCWM Publication 14 the specifics that we have been discussing related to presenting the software identification.

Mr. Darrell Flocken (NCWM) asked whether it's a specification or information. That would determine whether it should belong in NIST HB 44 or only in NCWM Publication 14. One possibility is below:

This publication is available free of charge from: https://doi.org/10.6028/NIST.SP.1253

(3) The version or revision identifier shall be directly and inseparably linked to the software itself.

Note: The version or revision identifier may consist of more than one part, but at least one part shall be dedicated to the metrologically significant software.
[Nonretroactive as of January 1, 20XX]

(Added 20XX)

Concern was expressed that this could cause confusion for field inspectors. Software separation isn't something that's intended to be useful in the field. It is intended to ease type approval and software maintenance release processing. This would lend weight to the argument of keeping it in NCWM Publication 14.

If the Sector desires to include this in NCWM Publication 14, we would need to identify all the sections where this concept would need to be added. The Software Sector doesn't have the authority to add it to the other sectors' Publication 14's. Mr. Flocken reported that a note regarding the concept of software separation has already been added to several of the various NCWM Publication 14 sections.

The Chair proposed that we table Agenda Item 2 until 2021, and that we continue to pursue implementing the checklist in NCWM Publication 14. Mr. Flocken suggested that the Software Sector recommend that the various sectors adopt this for their Publication 14's. It would take a year or so, to make it through all the various sectors. A note could be added saying that a device can't be rejected if it doesn't meet this requirement in the checklist until 2022. It was agreed that we would table this item until the 2021 meeting, at which time we will propose the following (updated) wording for the 2022 version of NCWM Publication 14:

3. Additional Marking Requirements – Software

Identification of Certified Software:

The manufacturer must describe and possibly demonstrate how the version or revision identifier is directly and inseparably linked to the metrologically significant software. Where the version revision identifier is comprised of more than one part, the manufacturer shall describe which portion represents the metrological significant software and which does not.

Note: Manufacturers may choose to separate metrologically significant software from non-metrologically significant software. Separation would allow the revision of the non-metrological portion without the need for further evaluation. In addition, non-metrologically significant software may be updated on devices without breaking a seal, if so designed. Separation of software requires that all software modules (programs, subroutines, objects, etc.) that perform metrologically significant functions or that contain metrologically significant data domains form the metrologically significant software part of a measuring instrument (device or sub-assembly). If the separation of the software is not possible or needed, then the software is metrologically significant as a whole.

At the 2017 joint meeting, the MDMD Work Group discussed adding the section regarding linking of identifier to the software to their section in NCWM Publication 14. There were no objections, so Mr. Flocken said he'd add it for next year's publication. A note shall be added that this is voluntary until 2022.

Also, we further discussed the idea of software separation, especially in how it pertains to the difference between the terms "metrologically significant" and "legally relevant." Some legal requirements have nothing to do with metrology. There is a difference in how the U.S. regards this (since each state can have different legal requirements) vs. the philosophy in Europe. There isn't a definition of "metrologically significant" in NIST Handbook 44, but NCWM Publication 14 has a description of all the parameters that needs to be sealed, which includes both metrologically significant and legally relevant parameters.

A definition of "metrologically significant" could be helpful, but Mr. Flocken suggested we make sure it doesn't contradict the Verified Conformity Assessment Program's (VCAP) administrative policies.

NIST Handbook 44 does contain a definition for "metrological integrity".

This publication is available free of charge from: https://doi.org/10.6028/NIST.SP.1253

Type evaluation is the time at which decisions are made regarding which exact parameters are sealable. According to Mr. Jim Truex (NTEP Administrator), the U.S. has never been able to come to a consensus on this subject.

Mr. Jim Pettinato (TechnipFMC) suggested that we work offline to generate a description intended to provide guidance on what we mean by "metrologically significant." Mr. Pettinato, Mr. Doug Bliss (Mettler Toledo), Dr. Ambler Thompson (NIST OWM), and Mr. Kevin Detert (Avery Weigh-Tronix) volunteered to make up a subcommittee to address this subject.

We also considered the issue of having to adopt a general software requirement to multiple sections of NCWM Publication 14 to address essentially the same requirement for each category of device separately. The idea was floated by the Sector that perhaps a new section should be added to NCWM Publication 14 specific to software that applies to all metrologically significant software in all devices types that might contain such. Rather than formally suggesting this be done, we decided to informally run the idea past the NCWM's Specifications and Tolerances Committee. That way, if there was little interest or strong objection, we wouldn't waste time generating a draft.

How the Sector decides to progress on this item is dependent on the NCWM Board of Director's decision regarding a separate section on software for NCWM Publication 14. If the decision is to grant the Sector's wishes, then we would start crafting language for our new section. Otherwise, we can consider the suggested language put forth in the last meeting.

Discussion:
If the Software Sector gets its own section in NCWM Publication 14, we may not need to alter NIST Handbook 44 regarding this specific agenda item, according to Mr. Flocken. There is a general NTEP technical policy within NCWM Publication 14, which may be the best place to address communicating the requirements for evaluation of software and software-based devices and the need to include type compliant software version/revision information on the certificate of conformance.

Conclusion:
This agenda item remains tabled until a decision on the direction for NCWM Publication 14 is made by the NTEP Committee.

7. Software Protection / Security

Source:
NTEP Software Sector

Background:
See the 2017 Software Sector Summary for additional background on this item.

The Sector continued to develop a proposed checklist for NCWM Publication 14. The numbering will still need to be added. This is based roughly on OIML R 76 – 2 checklist and discussions beginning as early as the October 2007 NTEP Software Sector Meeting. The information requested by this checklist is currently voluntary, however, it is recommended that applicants comply with these requests or provide specific information as to why they may not be able to comply. Based on this information, the checklist may be amended to better fit with NTEP's need for information and the applicant's ability to comply.

The California, Maryland, and Ohio NTEP laboratories agreed to use this checklist on one of the next devices they have in the lab and report back to the Sector on what the problems may be. In February 2011, the North Carolina NTEP laboratory was also given a copy of the checklist to try.

The NTEP labs using this checklist on a trial basis indicated that there was some confusion as to versions/wording. There may be more than one version in circulation. The version shown in this Summary shall be used henceforth.

The checklist as updated during the 2014 meeting:

This publication is available free of charge from: https://doi.org/10.6028/NIST.SP.1253

This publication is available free of charge from: https://doi.org/10.6028/NIST.SP.1253

1. Devices with Software

1.1. Declaration of the manufacturer that the software is used in a fixed hardware and software environment. **<u>The manufacturer should indicate whether it's solely software or includes hardware in the system. Can the software be changed after the system has been shipped without breaking a seal?</u> AND** ☐ Yes ☐ No ☐ N/A

1.2. Cannot be modified or uploaded by any means after securing/verification. **<u>With the seal intact, can you change the software?</u>** ☐ Yes ☐ No ☐ N/A

Note: It is acceptable to break the "seal" and load new software, audit trail is also a sufficient seal.

1.3. The software documentation contains:

1.3.1. Description of all functions, designating those that are considered metrologically significant. ☐ Yes ☐ No ☐ N/A

1.3.2. Description of the securing means (evidence of an intervention). ☐ Yes ☐ No ☐ N/A

1.3.3. Software Identification, including version/revision. **<u>It may also include things like name, part number, CRC, etc.</u>** ☐ Yes ☐ No ☐ N/A

1.3.4. Description how to check the actual software identification. ☐ Yes ☐ No ☐ N/A

1.4. The software identification is:

1.4.1. Clearly assigned to the metrologically significant software and functions. ☐ Yes ☐ No ☐ N/A

1.4.2. Provided by the device as documented. ☐ Yes ☐ No ☐ N/A

1.4.3. Directly linked to the software itself. **<u>This means that you can't easily change the software without changing the software identifier. For example, the version identifier can't be in a text file that's easily editable, or in a variable that the user can edit.</u>** ☐ Yes ☐ No ☐ N/A

2. Programmable or Loadable Metrologically Significant Software

2.1. The metrologically significant software is:

2.1.1. Documented with all relevant (see below for list of documents) information. *The list of docs referred to exists in agenda item 5.* ☐ Yes ☐ No ☐ N/A

2.1.2. Protected against accidental or intentional changes. ☐ Yes ☐ No ☐ N/A

2.2. Evidence of intervention (such as, changes, uploads, circumvention) is available until the next verification / inspection (e.g., physical seal, Checksum, Cyclical Redundancy Check (CRC), audit trail, etc. means of security). ☐ Yes ☐ No ☐ N/A

3. Software with no access to the operating system and/or programs possible for the user. <u>This section and Section 4 are intended to be mutually exclusive. Complete this section only if you replied Yes to 1.1.</u>

3.3. Check whether there is a complete set of commands (e.g., function keys or commands via external interfaces) supplied and accompanied by short descriptions. ☐ Yes ☐ No ☐ N/A

3.4. Check whether the manufacturer has submitted a written declaration of the completeness of the set of commands. ☐ Yes ☐ No ☐ N/A

This publication is available free of charge from: https://doi.org/10.6028/NIST.SP.1253

4. Operating System and / or Program(s) Accessible for the User. <u>Complete this section only if you replied No to 1.1.</u>

4.5. Check whether a checksum or equivalent signature is generated over the machine code of the metrologically significant software (program module(s) subject to legal control Weights and Measures jurisdiction and type-specific parameters). **<u>This is a declaration or explanation by the manufacturer.</u>** ☐ Yes ☐ No ☐ N/A

4.6. Check whether the metrologically significant software will detect and act upon any unauthorized alteration of the metrologically significant software using simple software tools (e.g., text editor). **<u>This is a declaration or explanation by the manufacturer.</u>** ☐ Yes ☐ No ☐ N/A

4.7. Check whether the manufacturer has provided a description of the software functions that are metrologically significant, meaning of the data, etc., e.g. an architecture diagram or flowchart.

4.8. Check that there is guidance related to the software identification (version, revision, etc.), how to view it, and how it is tied to the software.

4.9. Check that the manufacturer has provided an overview of the security aspects of the operating system, e.g. protection, user accounts, privileges, etc.

5. Software Interface(s)

5.10. Verify the manufacturer has documented:

5.10.1. **<u>If software separation is employed, t</u>**he program modules of the metrologically significant software are defined and separated. ☐ Yes ☐ No ☐ N/A

5.10.2. **<u>For software that can access the operating system or if the program is accessible to the user, t</u>**he protective software interface itself is part of the metrologically significant software. ☐ Yes ☐ No ☐ N/A

5.10.3. The functions of the metrologically significant software that can be accessed ~~**via the protective software interface**~~. ☐ Yes ☐ No ☐ N/A

5.10.4. The **<u>metrologically significant</u>** parameters that may be exchanged ~~**via the protective software interface**~~ are defined. ☐ Yes ☐ No ☐ N/A

5.10.5. The description of the functions and parameters are conclusive and complete. ☐ Yes ☐ No ☐ N/A

5.10.6. There are software interface instructions for the third party (external) application programmer. ☐ Yes ☐ No ☐ N/A

This checklist was discussed during the 2017 NTEP lab meeting, and Mr. Flocken received two submissions. One response was very helpful, and the other one said that everything was N/A pertaining to their device, except for a bit regarding calculating the CRC and sealing. In general, the labs said that even when they hand the checklist out, they usually don't get it back. We're pushing the labs to be a bit more proactive.

There is only one NTEP lab authorized to evaluate multiple dimension measuring devices (MDMDs). All of the NTEP labs have been given a copy of the checklist, but we're not sure whether their lab has found it helpful.

Again, the benefit of a separate section of NCWM Publication 14 for software is evident for this agenda item.

Discussion:
Mr. Flocken shared (anonymously) some results from the NTEP labs. There were three checklists returned over the last year. One submission included commentary from the company responding to the checklist regarding the difference between embedded systems versus open systems. That submitter used the WELMEC guidelines.

This publication is available free of charge from: https://doi.org/10.6028/NIST.SP.1253

Mr. Flocken reported that, in general, it seems companies are starting to respond more thoughtfully to the checklist. In prior years, it seemed like they'd simply just check everything off.

There appears to be a gap between the companies responding to the checklist and the NTEP labs perceiving use in the responses. There's a need for an explanation of what responses to the various questions mean to the NTEP lab evaluators, which should be in plain language, similar to the 2014 presentation on the general concepts of the Software Sector's work.

We also discussed the need to formalize how the checklist is distributed. Cardinal Scale Manufacturing reported they had not received the checklist as part of a type approval application packet, and it seems they're not unique.

It was mentioned that Mexico now considers many things "software", including PAL's, GAL's, etc. At one time we tried to craft our own definition of software without much luck. We may be able to reference an international definition.

The VCAP program should reference the software identifier and version/revision, but until NTEP is consistent on how the software identifier and version/revision is recorded on the CC, this isn't feasible. VCAP was originally intended as an assessment whether a particular implementation meets type.

Conclusion:
Mr. Flocken will work on formalizing how the checklist is distributed. We will also need to work on crafting an explanation for the NTEP labs as to how the answers to the checklist benefit their evaluators.

8. NTEP Application for Software and Software-based Devices

Source:
NTEP Software Sector

Background:
The purpose of initiating this item was to identify issues, requirements and processes for type approving device applications, specifically for not-built-for-purpose software since it is now explicitly allowed. It was suggested that it may be useful to the NTEP labs to devise a separate submission form for software for these applications. What gets submitted? What requirements and mechanisms for submission should be available? Validation in the laboratories - all required subsystems shall be included to be able to simulate the system as installed.

Mr. John Roach (California Division of Measurement Standards) stated that if the software package being evaluated supports platforms/subsystems from multiple manufacturers, testing should be done using at least two platforms/subsystems. NTEP weighing evaluators and scale manufacturers indicated that this is not usually done for scale evaluations.

Since the NTEP Committee passed the related item at the NCWM Annual Meeting, we will continue to work on this. Mr. Jim Truex (NTEP Administrator) indicated that we can move in this direction but felt it was somewhat premature to develop this thoroughly now. At the point where the Sector has developed checklist requirements, then we could move to perhaps add a subsection to current NTEP applications for applicable software (Refer to D-31.6.1). It was also agreed that there seems to be no reason for limiting the scope of this item to software-only applications, and hence all software/software-based devices could benefit from an enhanced application process.

Comments given at the meeting indicate that current practice does not require anything different for software/software-based devices compared to any other type approval. It was also noted that for international applications, OIML D-31.6.5 states, "The approval applicant is responsible for the provision of all the required equipment and components." This would likely also be the policy of NTEP.

Since the checklist is still being tried out by some of the NTEP laboratories, the Sector is not quite ready to develop this fully. Some documentation that eventually might be required by applicants could include (from WELMEC doc. 7-2 Issue 4): This is the list of documents referred to in the checklist.

This publication is available free of charge from: https://doi.org/10.6028/NIST.SP.1253

- A description of the software functions that are metrologically significant, meaning of the data, etc., e.g., an architecture diagram or flowchart.
- The software identification (version, revision, etc.) and how to view it.
- An overview of the security aspects of the operating system, e.g., protection, user accounts, privileges, etc.

Mr. Flocken and Mr. Truex reviewed existing documentation required for obtaining certification in NCWM Publication 14, Administrative Policy, and the application, to see what is already required. Administrative Policy 9.1.7 was where this was found:

- Engineering specification
- Operating descriptions that characterize the type

NTEP evaluators already have the authority to request whatever documentation they need. We can provide them with a list of documents that we think would assist the evaluator in his job and also give the manufacturer a good idea of what they should be capable of providing.

Mr. Flocken suggested that this list could be added to Administrative Policy, 9.1.7 in NCWM Publication 14. Mr. Truex suggested it could also be added to the application.

If we combine the two lists, it might appear as something like this:

- A description of the software functions that are metrologically significant, meaning of the data, etc., e.g. an architecture diagram or flowchart.
- A description of the user interface, communication interface, menus, and dialogs.
- The software identification (version, revision, etc.) and how to view it.
- An overview of the system hardware, e.g. topology block diagram, type of computer(s), type of network, etc., if not described in the operating manual.
- An overview of the security aspects of the operating system, e.g. protection, user accounts, privileges, etc.
- The operating manual.
- Engineering specification.
- Operating descriptions that characterize the type.

A statement could be made along the lines of, "If not included in the operating manual, provide the following, as applicable."

After the last sentence in Subsection 9.1.7, the following could be added:

As part of the type evaluation submission, the following information should be provided for software-based devices:

- **A description of the software functions that are metrologically significant, meaning of the data, etc., e.g. an architecture diagram or flowchart.**
- **The software identification (version, revision, etc.) , how to view it, and how it is tied to the software.**
- **An overview of the security aspects of the operating system, e.g. protection, user accounts, privileges, etc.**

These documentation requirements will be considered as input for requirements that will eventually appear in NCWM Publication 14 and the application paperwork. Further work by the Sector to develop the NCWM Publication 14 requirements is needed, after more input from the labs is gathered. The Sector recommends including the above

bulleted list as an introduction to the checklist as part of our recommendation to include the checklist from Agenda Item 3 in NCWM Publication 14. As a description of the accuracy of the measuring algorithms, simply declaring the type and class being aimed for may be sufficient. This list should reflect the needs of the labs for an evaluation. The bulleted list and the paragraph before it should be brought to the labs for an initial review and their input.

There may be concerns with disclosure of proprietary information. Mr. Truex says that the labs already protect other proprietary information. If the information provided is sufficiently high level, even theft of the data shouldn't cause too much of a concern.

While working on writing requirements for NCWM Publication 14 from the checklist we've designed, we considered altering the second bullet point in our proposal for Section 9.17, so that it will require a description of how the software version or revision identifier is tied to the software itself.

At the 2016 Software Sector meeting, it seemed that the goal of this agenda item has somewhat shifted back to the original purpose, which is how do we communicate to applicants the expectations related to software-based devices? Ms. Diane Lee (NIST OWM) suggested we review the OIML requirements for documentation. The comment was made from the floor that OIML may go further than we are currently prepared to recommend. Mr. Jason Jordan (USDA, FGIS) expressed his opinion that moving forward with this item will be helpful for the labs. Mr. Flocken and Mr. Truex think this should be added to the Application section. If limited to that section, it shouldn't require approval from any of the other Sectors. Mr. Doug Bliss (Mettler Toledo) suggested that it might be easier to provide examples that do not meet acceptable standards.

Subsection 9.3 of NCWM Publication 14 Administrative Policy describes how to prepare for type evaluation. It might be better to add our suggested wording there instead of Subsection 9.1.7. Mr. Jim Pettinato (Technip FMC) found a page on NCWM's website that describes what's needed for a type evaluation. He suggested we could add our checklist to the list of documents there. The NTEP Committee decides what's posted on the website.

Mr. Truex thinks we may need to come up with a list of software parameters and functions that are required to be protected. This will be a lot of work, but it may be the right answer, generating a separate section in NCWM Publication 14 (and/or NIST Handbook 44) pertaining specifically to software.

The group discussed whether a list of sealable parameters should include device-specific parameters as well as software-specific parameters (e.g., CRC), or only the latter. The latter should be a fairly short list, including such parameters as:

- Replacing software
- Access to critical sections of the software

Historically, requirements for software-only applications haven't been as high as requirements for software applications that include hardware. The number of software-only applications has increased dramatically over the last few years.

The topic arose once again that we propose to the NTEP Committee to add a software specific section to NCWM Publication 14. We may not know exactly what we want to include, but we could get the ball rolling by presenting a set of examples of situations that show the need. Mr. Truex thinks that the NTEP Committee will ask whether this needs a change to NIST Handbook 44. We need to address that in any sort of presentation we make to them. Mr. Richard Suiter (Richard Suiter Consulting) suggested that we add a requirement to NIST Handbook 44 that the software be sealable, which is a bit of a difference from making changes to software evident. Paragraph G-S.2. appears to address this in its mention of avoiding facilitation of fraud. The philosophy of sealing and method of sealing also cover this. We want to recommend adding a separate section to NCWM Publication 14 for software, a list of sealable parameters, explain that going to the separate sectors isn't working, and explain that manufacturers will need to address both our software section as well as application-specific portions of NCWM Publication 14.

The Sector provided an outline for the proposed NCWM Publication 14 section prior to the NTEP Committee meeting in two weeks, to gauge their opinion as to whether this is a viable approach. No action was taken until this year's

This publication is available free of charge from: https://doi.org/10.6028/NIST.SP.1253

NCWM Annual meeting, where the new NTEP Committee Chair guaranteed he would make it a priority to make progress on the proposal.

Discussion:
Mr. Flocken is trying to get an invitation for the Software Sector to the NTEP labs meeting in April, to be able to answer any of their questions and have a discussion on how software could be addressed more formally in submissions from applicants, and how the Sector can support the labs in their evaluations.

We need to provide a recommendation for an administrative change for the NTEP Committee's approval, via Mr. Flocken and Mr. Truex. Since this would be a recommendation related to the policy, not the device code, it simplifies the process.

If the Software Sector does get its own section within NCWM Publication 14, the text may gain more notice if it's within that section rather than the general administrative policy; however, if it's within the general administrative policy, it wouldn't be hard to move it to the Software Sector's section of NCWM Publication 14.

Conclusion:
The Software Sector recommends that this text be added as part of the existing Subsection 9.1.7 in NCWM Publication 14 Administrative Policy:

Additionally, for software-based devices:

- **A description of the software functions that are metrologically significant, meaning of the data, etc., e.g. an architecture diagram or flowchart.**
- **The software identification (version, revision, etc.), how to view it, and how it is tied to the software.**
- **An overview of the security aspects of the software(s), e.g. protection, user accounts, privileges, platforms, etc.**

Mr. Pettinato will craft the formal proposal. Mr. Flocken asked the NTEP lab evaluators in attendance what they need from the Software Sector to help them interpret the documentation they will receive from the manufacturers in response to this requirement.

9. Training of Field Inspectors

Source:
NTEP Software Sector

Background:
During discussions at the 2009 NTEP Software Sector Meeting, the Sector concluded that a new agenda item should be initiated specific to the training of field inspectors in relation to evaluating/validating software-based devices.

California has an Examination Procedure Outline (EPO) that begins to address this. Use *California Handbook 112* as a pattern template for how it could read.

Items to be addressed:

- Certificate of Conformance
- Terminology (as related to software) beyond what is in *NIST Handbook 44*.
- Reference materials / information sources

This publication is available free of charge from: https://doi.org/10.6028/NIST.SP.1253

This publication is available free of charge from: https://doi.org/10.6028/NIST.SP.1253

System Verification Tests

NOTE: Item numbers 1 through 5 apply to both weighing and measuring devices. Numbers 6 and 7 are specific to weighing devices; while numbers 9 and 10 apply to measuring devices.

1. Identification. The identification (ID) tag may be on the back-room computer server and could be viewed on an identification screen on the computer monitor. The ID information may be displayed on a menu or identification screen. Though currently discouraged, some systems may be designed so the system must be shut down and reset to view the ID information. G-S.1 (1.10)

   1.1. Manufacturer.

   1.2. Model designation.

2. Provisions for sealing. G-S.8 [1.10]; S.1.11 [2.20]; S.2.2 [3.30]

   2.1. Verify sealing category of device (refer to Certificate of Approval for that system).

   2.2. Verify compliance with certificate.

3. Units of measure.

   3.1. A computer and printer interfaced to a digital indicator shall print all metrological values, intended to be the same, identically. G-S.5.2.2(a); G-S.5.1 [1.10]

   3.2. The unit of measure, such as lb, kg, oz, gal, qts, liters, or whatever is used, must agree.

4. Operational controls, indications and features (buttons and switches). Verify that application criteria and performance criteria are met (refer to Certificate of Approval).

   4.1. Any indication, operation, function or condition must not be represented in a manner that interferes with the interpretation of the indicated or printed values.

5. Indications and displays.

   5.1. Attempt to print a ticket. The recorded information must be accurate or the software must not process and print a ticket with erroneous data interpreted as a measured amount.

Weighing Devices

6. Motion detection.

   6.1. For railway track, livestock, and vehicle scales apply or remove a test load of at least 15d while simultaneously operating a print button, push-button tare or push-button zero. A good way to do this is to try to print a ticket while pulling the weight truck or another vehicle onto the scale. Recorded values shall not differ from the static display by more than 3d. Perform the test at 10%, 50% and 100% of the maximum applied test load. S.2.5.1(a) [2.20]; EPO NO. 2-3, 2.4

   6.2. For all other scales, apply or remove at least 5d. Printed weight values must agree with the static weight within 1d and must exactly agree with other indications. S.2.5.4(b) [2.20]; EPO NO. 2-3, 2.4

7. Behind zero indication.

   7.1. Apply a load in excess of the automatic zero setting mechanism (AZSM) and zero the scale. S.2.1.3 [2.20]; EPO NO. 2-3, 2.4, 2.5.2

   Example: On a vehicle scale have someone stand on the scale, then zero them off (AZSM is 3d). Remove the weight (person) and note the behind zero display (usually a minus weight value) or error condition.

7.2. Attempt to print a ticket. With a behind zero condition, (manually or mechanically operated) a negative number must not be printed as a positive value.

8. Over capacity.

8.1. Manually enter a gross weight if permissible or apply a test load in excess of 105% of the scale's capacity. S.1.7 [2.20]; S.1.12, UR.3.9 [2.20]

8.2. Attempt to print a weight ticket. A system must not print a ticket if the manually entered weight or load exceeds 105% of the scale capacity.

Measuring Devices

9. Motion detection.

9.1. Initiate flow through the measuring element. Attempt to print a ticket while the product is flowing through the measuring chamber. The device must not print while the indication is not stable. S.2.4.1. (3.30)

10. Over capacity.

10.1. Attempt to print a ticket in excess of the indicated capacity. A system must not print a ticket if the device is manually or mechanically operated in excess of the indicated value.

NOTE: Be aware of error codes on the indicator which may be interpreted as measured values.

Mr. Paul Jordan (California Division of Measurement Standards) is already doing something similar, and he may be able to assist. Mr. John Roach (California Division of Measurement Standard) will talk to him to see whether they're available. In addition, Mr. Ed Parks (California Division of Measurement Standards) is based in Sacramento and a potential resource. If the meeting is held in Sacramento next year, they may be able to attend.

Mr. Jim Truex (NTEP Administrator) pointed out that NCWM's Professional Development Committee (PDC) would also be a valuable resource on this subject. Mr. Pettinato, Co-Chair, will contact them.

**NIST Handbook 112- Examination Procedure Outline for Commercial Weighing and Measuring Devices.*

The PDC is focused on training sessions at the moment, so it's unsure how much time they'd have to review this currently.

It was suggested by Mr. Truex and Mr. Darrell Flocken we make it part of our report as an attachment or an appendix of the meeting minutes. Then we can send out an email notifying the Software Sector members as to where to find it.

Alternatively, we could forward the document to the PDC, tell them it was our starting point, and ask them for their suggestions.

The Sector would like to continue exploring means by which it can be of assistance in training of field inspectors as software and electronic systems become more and more prevalent in their daily tasks.

It was also suggested we contact Mr. Ross Anderson (a paid consultant working with the PDC) to ask his opinion on how the Software Sector could best proceed to assist in the training of field inspectors. The Sector Chair, Jim Pettinato, will act as primary point of contact for this communication.

Mr. Pettinato will contact Mr. Anderson regarding the PDC offering the Software Sector assistance in continuing to develop training pertaining to software.

This publication is available free of charge from: https://doi.org/10.6028/NIST.SP.1253

This publication is available free of charge from: https://doi.org/10.6028/NIST.SP.1253

Discussion:
Mr. Pettinato is now a member of the PDC, so he will be able to pass on any suggestions we may make. The PDC is making an effort to provide training modules/videos accessible to anyone, so everyone is on the same page. Mr. Flocken suggested that as these training modules are updated, we should provide relevant input.

NIST OWM has developed EPOs for many of the more common types of weighing and measuring devices and systems. These are contained in NIST Handbook 112. Mr. Flocken recommended that we approach NIST regarding adding an EPO pertaining to software. OWM has not developed an EPO for all equipment. Mr. Rick Harshman (NIST OWM) reported OWM updates their EPOs to the most recent version of NIST Handbook 44 every year.

Mr. Flocken suggested members of the Software Sector attend the Weights and Measures Regional Association Meetings to gain feedback on the sort of guidance field officials need.

Mr. Harshman said that the most value to the field inspectors would be to identify for them different means that software can be used to manipulate the metrological system. In particular, how can someone attempt to cheat using software?

Mr. Doug Bliss (Mettler Toledo) quickly reviewed NIST Handbook 112 and reported that the majority of it has to do with safety guidelines. Mr. Harshman said that there are numerous references to NIST HB 44, which pertain more to the requirements for the inspections. NIST Handbook 112 has appendices that include step-by-step procedures. We may want to consider crafting our own procedure for a new appendix.

It was mentioned that Mexico and Brazil (and China, to an extent) have a requirement for manufacturers to supply an auditing document when they submit for a type approval. This would be a big change for NCWM.

Conclusion:
It was suggested that perhaps a presentation on this subject at the main and regional NCWM meetings might be a good starting point. Mr. Pettinato suggested an entry in the NCWM newsletter, targeted to inspectors, would also help. The newsletter is submitted quarterly. Mr. Flocken confirmed that submissions for the next newsletter are due January 15th. A helpful newsletter article could describe how to find the CC for a system that includes software. Mr. Brian Duncan (ECRS) volunteered to write a first draft.

Mr. Pettinato suggested that members of the Software Sector download and review NIST Handbook 112, so that we can have a better idea regarding where we might best target additions to the text. We could have an online meeting to discuss and update the agenda prior to our next Software Sector meeting. Mr. Flocken or Mr. Pettinato can set up an online meeting, which may be in late September.

Recommendations for changes to NIST Handbook 112 should go to Mrs. Tina Butcher (NIST OWM).

10. Use of GPS Receivers and Mapping Software for Trade (e.g. fare determination)

Source:
Software Sector

Background:
There were a few presentations at the NCWM Interim Meeting on this subject. The 2016 NCWM Annual Meeting archive (Denver 2016) includes a presentation from Lyft from that meeting.

Dr. Ambler Thompson (NIST OWM) has discussed this subject with European officials. One issue is traceability of the time stamp(s). You can also calculate velocity based upon the phase shift of the GPS signal, though it requires a high-end, survey-grade GPS receiver ($50k each). Car companies can use these devices to obtain a great deal of data.

Uber and Lyft claim that they are not billing upon GPS data, but rather a pre-negotiated contract based upon distance, time, and type of vehicle. Mr. Bliss has been told that the bill is based upon the starting GPS location from the driver's phone, the ending GPS location from the same phone, and a calculation of the shortest distance from Google Maps.

If the driver's phone doesn't have a great GPS receiver, or if the reception is bad so it's relying upon cell towers, etc., that's a problem. We're also not sure just how accurate Google Map's route calculation is. Also, Google Maps is a disinterested third party whose database is being used for a purpose they didn't specifically authorize.

Mr. Doug Musick (Kansas) reported that the Uber contract is based upon a unit price, though they do provide an estimate to the customer.

At the 2017 Software Sector meeting, it was determined that at this stage there isn't much for the Software Sector to do on this subject. Mr. Pettinato asked that the members of the Software Sector review the proposals in NCWM Publication 16 pertinent to this issue.

Discussion:
Dr. Katya Delak (NIST OWM) said that OIML may attempt to address this issue as well, probably within the next few years.

The 2018 NIST Handbook 44 Taxi Meter Code has been changed, and approvals are not being generated for GPS-based technology. OBDC-based systems have been accepted for type approval. There are no NCWM Publication 14 guidelines.

Conclusion:
As in 2017, it doesn't seem that there is anything the Software Sector needs to address on this subject currently. After some discussion, the members of the Software Sector agree that this agenda item can be removed from future meetings.

NEW ITEMS

11. New Publication 14 Section specific to Software

Background:
In the last few meetings, it has been recognized that there is significant difficulty aligning the various Sectors to maintain continuity and agreement in what changes go into each Sector's section of NCWM Publication 14. It also impedes the progress the Software Sector can make as we have to explain/defend our positions multiple times to different audiences. Hence, it was proposed while working on several of the carry-over items that a better process might be to segregate the software-specific requirements for type evaluation into a separate section, controlled by our Sector. Hence, the Sector agreed to forward a recommendation to the NTEP Committee to grant the Sector a software-specific section of NCWM Publication 14. Accompanying this recommendation was an outline of the potential content that would be included. Full text of the recommendation is below:

Current state*:*
There is no single NCWM Publication 14 device category in which to place software-specific requirements, design considerations related to software or test procedures specific to software. Since most modern measurement devices contain software, to appropriately address any concerns each section of NCWM Publication 14 must include all software considerations. Further, each device section has a different governing Sector, which makes the process of change an exercise in convincing each Sector to make needed additions while keeping those additions harmonized across Sectors; an effort that has proven very difficult and time consuming.

Since the Sectors don't meet simultaneously, often our submissions are accepted into each Sector's agenda, then one will adopt and another will have comments or reject the request, leading to inconsistent treatment of software between classes of device.

Internationally, OIML and WELMEC have adopted a similar approach by segregating software recommendations/requirements into a standalone document or documents, and that approach aids both evaluators and submitters by consolidating the requirements for software into a single section that can be shared with developers.

This publication is available free of charge from: https://doi.org/10.6028/NIST.SP.1253

This publication is available free of charge from: https://doi.org/10.6028/NIST.SP.1253

Software Sector Proposal:

Create a Publication 14 Software category, which includes requirements, considerations and test procedures common to all software-based devices, including software-only products. Such a section might include the following:

1. *Models to be submitted for evaluation*
    a. *Determining scope of software to be approved*
        i. *Measurement and presentation*
        ii. *Calculations based on a measured value*
        iii. *Manual entry of measured value*
        iv. *Other*
    b. *Application of software may lead to additional Publication 14 section consideration*
    c. *Minimum computing requirements statement*
2. *Software Identification*
    a. *Appropriate means of 'marking' metrologically significant software*
    b. *Software Separation and marking consequences*
    c. *Relationship between software and software identifier*
    d. *Presentation of software identifier*
        i. *Example icons and menu text*
        ii. *Exceptions*
3. *Protection against unauthorized software change*
    a. *How is software "sealed"?*
    b. *Remote software update considerations*
    c. *Audit trail (if employed) requirements for software updates*
4. *Accuracy of data calculations*
    a. *When to stop evaluating calculations & data manipulation*
5. *Software Evaluation Checklist*

Future Topics

1. *Distributed software considerations*
    a. *Securing communications between metrologically significant distributed software modules or components of a system*

It seems likely that action may take place within the next year, and that means the Sector faces the task of quickly publishing the text of a new section. It is hoped that some time could be spent developing the outline further and identifying content already created/included in other sectors that would need to be migrated to the new section.

This publication is available free of charge from: https://doi.org/10.6028/NIST.SP.1253

Discussion:
Mr. James Cassidy (Massachusetts) assured Mr. Jim Pettinato (TechnipFMC) at the NCWM Annual Meeting this summer that they will take this under consideration. Mr. Darrell Flocken reported that the delay was due to not receiving input from the various sectors, either for or against. Mr. Flocken and Mr. Jim Truex (NTEP Administrator) are urging the various members to voice their opinion.

Some of the other sections of NCWM Publication 14 already have software requirements, and there have been some questions regarding whether this would be removed and placed in the new software section. Mr. Pettinato clarified that device-specific software requirements would remain where they are. The new Software Section would be more generic in nature.

The Scale Manufacturers Association (SMA) representatives indicated that their group may possibly review this proposal and come up with a position on the subject.

In the international community, there are general guidelines for software, such as in OIML D-31, which are then adapted and implemented in the device-specific documents.

The starting point for the new Software Section in Publication 14 would be the software checklist.

The new section would not be intended for software-only applications; it would be intended for anything metrological that has software.

There should be an introduction explaining when this section applies. "This code applies to the following…This code does not apply to the following…"

1. *Scope of application – any device of whatever type that contains software must meet the requirements herein. This includes both built-for-purpose and not-built-for-purpose software.*

2. *Materials to be submitted for evaluation*

    a. *Determining which software modules need to be approved*

        i. *Measurement and presentation*

        ii. *Calculations based on a measured value*

        iii. *Manual entry of measured value (e.g. measurement data rather than a measurement result)*

        iv. *Other*

    b. *Application of software may lead to additional Publication 14 section consideration*

    c. *Minimum computing requirements statement*

3. *Software Identification*

    a. *Appropriate means of 'marking' metrologically significant software*

    b. *Software Separation and marking consequences*

    c. *Relationship between software and software identifier*

    d. *Presentation of software identifier*

        i. *Example icons and menu text*

        ii. *Exceptions*

This publication is available free of charge from: https://doi.org/10.6028/NIST.SP.1253

4. *Protection against unauthorized software change*
    a. *How is software "sealed"?*
    b. *Remote software update considerations, e.g. authentication*
    c. *Audit trail (if employed) requirements for software updates*
5. *Accuracy of data calculations*
    a. *When to stop evaluating calculations & data manipulation*
6. *Software Evaluation Checklist*

Gathering some of the text we've proposed all in one place:

(3) The version or revision identifier shall be directly and inseparably linked to the software itself. The version or revision identifier may consist of more than one part, but at least one part shall be dedicated to the metrologically significant software.
[Nonretroactive as of January 1, 20XX]
(Added 20XX)

Additionally, for software-based devices:

- **A description of the software functions that are metrologically significant, meaning of the data, etc., e.g. an architecture diagram or flowchart.**
- **The software identification (version, revision, etc.), how to view it, and how it is tied to the software.**
- **An overview of the security aspects of the software(s), e.g. protection, user accounts, privileges, platforms, etc.**

G-S.9. Metrologically Significant Software Updates

A software update that changes the metrologically significant software shall be considered a sealable event.

It was suggested that we explicitly state that if something doesn't affect the metrological operation of a software-based device, we don't care about it.

It was suggested that we include a description of what information would be logged in a category 3 audit trail that pertains to software updates. What about category 2? Mr. Flocken recommended that we stay away from requiring any particular type of sealing category. For example, "When using a category 3 audit trail, the following information should be…" This would be a description of the methods to comply with the existing sealing requirements, not creating new requirements.

Mexico has a very thorough description of what is required in their audit trails. We may want to review that at some point.

We should incorporate the description of software separation from Mr. Bliss' presentation.

Mr. Pettinato suggested that we review some of the Software Sector meeting agendas from previous years for descriptions of exceptions and examples. Mr. Flocken will check to see if there is anything useful in the meeting agendas from the previous incarnation of the Software Sector. The D-31 document may be a good source of examples and explanations for issues to consider when performing a remote update.

Regarding the accuracy of calculations and at what point do you stop requiring evaluation, Mr. Flocken said that there's not a lot of existing documentation. The only guidance he thought NIST Handbook 44 includes on accuracy is regarding rounding. That's not the same thing as to when you stop the evaluation. "First final" is NTEP's standard, but the states can be different, requiring more. "First final" is in the NCWM Publication 14 Administrative Policy. The agreement as to where the boundary line is drawn may come about as a result of the discussion during type evaluation, but we can hopefully provide some guidance. This can be especially confusing when data is being transmitted and calculations are being performed remote to where a measurement was originally taken. NIST HB 44 deals particularly with "first final," but how that interacts with NIST Handbook 130 (Method of Sale) can introduce complications.

Measurement Canada considers similar issues, requiring W&M regulation to the equivalent of our "first final." Anything past that point isn't metrological.

Conclusion:
The Sector concluded that it should organize and summarize the data captured in this brainstorming session on what will likely go into this new software section of NCWM Publication 14. Ms. Teri Gulke (Liquid Controls) volunteered to write a first draft for the Software Sector members to review and amend. Once the Sector has approved a draft of representative example content, members of the Sector could choose to include this as an amendment to the NTEP agenda items.

12. Review/Discussion of New WELMEC 7.3/7.4 Drafts

Background:
WELMEC has been working on additional guidance for system architecture and design of software systems based on WELMEC 7.2 and has released two new draft guides titled 'WELMEC Guide 7.3 Reference Architectures' and WELMEC Guide 7.4 Exemplary Applications of WG 7.2' for review by the wider group. These address some of the questions that have come up in our own discussions, such as cloud-based metrology, remote storage and displays, etc. Time permitting, the Sector can review this draft document and we can forward any additional comments to the Convener for consideration in their upcoming Group 7 meeting in Berlin.

Discussion:
There was some concern expressed that the text of the new draft guides may be too specific. For example, in WELMEC 7.3 there is a description of "pairing" a sensor with the software and how to accomplish it. It would be better to be more generic and refer to "authentication" and "integrity" to establish a secure connection, rather than a particular method.

WELMEC 7.4 are oddball examples that may cause issues. Its title is "Exemplary Applications." A better title may be "Anomalous Applications." The second example is puzzling. They may be trying to describe a way to indicate that a measurement may not be accurate, but it's not coming through clearly. There didn't appear to be any authentication when a connection is established.

Discussion:
Our concerns will be relayed to the WELMEC working group via the CECOD representative.

13. Next Meeting

Background:
The Sector is on a yearly schedule for NTEP Software Sector Meetings. Now that we've adopted a joint meeting system, the next Sector joint meeting will likely coincide with one of the remaining Sector meetings. The Measuring Sector would be next in the sequence if we continue in the same manner.

Discussion:
We are due to meet with the Measuring Sector next year. Their meeting will be next September in Denver. Between now and then, the NCWM will meet twice, so the addition of a new software section within NCWM Publication 14 may have been addressed by that time.

This publication is available free of charge from: https://doi.org/10.6028/NIST.SP.1253

We discussed whether it was still beneficial to conduct joint meetings with the other sectors. Mr. Doug Bliss (Mettler Toledo) is retiring, so this is his last Software Sector meeting. Mr. Darrell Flocken asked whether we intend to replace him. Mr. Jim Pettinato (TechnipFMC) asked about the standard of having a NIST/NTEP Technical Advisor. Mr. Flocken said that there is discussion of moving away from that standard and adopting Software Sector's example of having Technical Advisors from industry.

The next meeting should have an agenda item for appointing a new Technical Advisor. If we could do that prior to the next meeting, that would be even better. Perhaps the nominations could be conducted via email.

Conclusion:
We agreed to continue with joint meetings for at least one more year (2019). After that meeting, we may want to consider conducting joint meetings with the NTEP labs.

This publication is available free of charge from: https://doi.org/10.6028/NIST.SP.1253

This publication is available free of charge from: https://doi.org/10.6028/NIST.SP.1253

THIS PAGE INTENTIONALLY LEFT BLANK

Appendix A to the 2018 Software Sector Summary

Acceptable Menu Text/Icons for Weights & Measures Information		
Permitted Menu Text Examples	**Permitted Icon shape Examples**	**Essential Characteristics**
Information Info		Top level menu text or icon • Icon text is a lower case "i" with block serifs • Text color may be light or dark but must contrast with the background color • Icon may have a circular border • Activation of this menu text/icon may invoke a second level menu text/icon that recalls metrology information.
Help ?		Top level menu text or icon • Icon text is a question mark • Text color may be light or dark but must contrast with the background color • Icon may have a circular border • Activation of this menu text/icon may invoke a second level menu text/icon that recalls metrology information.
Metrology Metrological Information	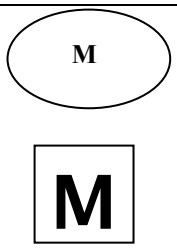	Top or second level menu text or icon • Icon text is an upper case "M" • Text color may be light or dark but must contrast with the background color • Icon may have a circular, rectangular, or rounded rectangle border. • If present, the activation of this menu text/icon must recall at a minimum the NTEP CC number.
NTEP Data N.T.E.P. Certificate		This one is debatable – what if the certificate is revoked? Does NTEP grant holders of CCs the right to display the logo on the device, or just in documentation?
Weights & Measures Info	W&M W/M	

This publication is available free of charge from: https://doi.org/10.6028/NIST.SP.1253

This publication is available free of charge from: https://doi.org/10.6028/NIST.SP.1253

THIS PAGE INTENTIONALLY LEFT BLANK

Appendix B
to the Software Sector Summary

NIST OWM Report on International Activity
Summary of OIML D 31 Revision Progress

August 17, 2018 – Louisville, Kentucky
Dr. K.M. Delak

OIML has been undertaking a revision of D-31: General Requirements for Software Controlled Measuring Instruments. This falls under Technical Committee 5, Subcommittee 2. Approval of the revision was taken at the CIML meeting in October 2016, and initial work began in spring of 2017, with the 1WD being circulated at that time for input.

September 2017: Project group met in Berlin to consolidate comments and complete a first revision. This constituted 1CD, which was subsequently circulated for vote and comment. *Circulation of a CD was chosen to ensure a maximum response from OIML member countries.* Further, two subgroups were formed: (1) Software Verification and (2) Operating Systems.

Discussions on draft language for Operating Systems were conducted largely between only the US and Germany by videoconference over the course of two months. The consensus language generated from this activity was introduced into the document in the subsequent project meeting.

Draft language for Software Verification was agreed to primarily by correspondence. This also was introduced into the document draft in the subsequent project meeting.

May 2018: Project group met in Dordrecht to consolidate comments from the 1CD. The group made rapid progress in consolidating language. The conveners initiated a third subgroup, Terminology Harmonization, to clarify the definitions on "measurement," "measurement result" and "measurement data." Current suggestions have been circulated to the USNWG for comment. The conveners ask for finalization of input to this by August 24, 2018.

It is expected that 2CD will be published in September. This will also be circulated to the USNWG for final comment and vote.

WELMEC WG7 has attempted to further clarify interpretation of WELMEC 7.2 with new draft documents WELMEC Guide 7.3 "Reference Architectures" and WELMEC Guide 7.4 "Exemplary Applications", meeting coming up on August 18, 2018 at the PTB offices in Berlin.

U.S. National Working Group consists of:

Dr. Katya Delak
Mr. Jim Pettinato
Mr. Doug Bliss
Ms. Teri Gulke
Mr. Jan Konijnenburg
Mr. Joe Porthouse
Mr. Shakila Xavier

This publication is available free of charge from: https://doi.org/10.6028/NIST.SP.1253

This publication is available free of charge from: https://doi.org/10.6028/NIST.SP.1253

THIS PAGE INTENTIONALLY LEFT BLANK

This publication is available free of charge from: https://doi.org/10.6028/NIST.SP.1253

Appendix F

National Type Evaluation Program (NTEP) Weighing Sector

Meeting Summary

August 21-23, 2018

INTRODUCTION

The charge of the NTEP Weighing Sector is important in providing appropriate type evaluation criteria based on specifications, tolerances and technical requirements of NIST Handbook 44 Sections 1.10. General Code, 2.20 Scales, 2.22 Automatic Bulk Weighing Systems, and 2.24 Automatic Weighing Systems. The Sector's recommendations will be presented to the National Type Evaluation Program (NTEP) Committee each January for approval and inclusion in NCWM Publication 14 *Technical Policy, Checklists, and Test Procedures* for national type evaluation.

The Sector is also called upon occasionally for technical expertise in addressing difficult NIST Handbook 44 issues on the agenda of National Conference on Weights and Measures (NCWM) Specifications and Tolerances (S&T) Committee. Sector membership includes industry, NTEP laboratory representatives, technical advisors and the NTEP Administrator. Meetings are held annually, or as needed and are open to all NCWM members and other registered parties.

Suggested revisions are shown in **bold face print** by ~~**striking out**~~ information to be deleted and **<u>underlining</u>** information to be added. Requirements that are proposed to be nonretroactive are printed in ***bold faced italics***.

Table A
Table of Contents

This publication is available free of charge from: https://doi.org/10.6028/NIST.SP.1253

Table B
Glossary of Acronyms and Terms

Acronym	Term	Acronym	Term
ABWS	Automatic Bulk Weighing Systems	NCWM	National Conference on Weights and Measures
AREMA	American Railway Engineering Maintenance-of-Way Association	NIST	National Institute of Standards and Technology
AWS	Automatic Weighing Systems	NTEP	National Type Evaluation Program
CC	Certificate of Conformance	OIML	International Organization of Legal Metrology
DES	Digital Electronic Scales	OWM	Office of Weights and Measures
HB 44	NIST Handbook 44	R	Recommendation
IZSM	Initial Zero-Setting Mechanism	SS	National Type Evaluation Program Software Sector
LMD	Liquid Measuring Device	S&T	Specifications and Tolerances Committee
MC	Measurement Canada	SMA	Scale Manufacturers Association
MRA	Mutual Recognition Agreement	WS	National Type Evaluation Program Weighing Sector

Details of All Items
(In order by Reference Key)

CARRY-OVER ITEMS

1. Recommended Changes to NCWM Publication 14 Based on Actions at the 2018 NCWM Annual Meeting

Source:
Mr. Richard Harshman, (NIST, Technical Advisor) will provide the Sector with specific recommendations for incorporating test procedures and checklist language based upon actions of the 2018 NCWM Annual Meeting. The Sector is asked to briefly discuss each item and, if appropriate, provide general input on the technical aspects of the issues.

A. SCL-6 S.1.2.2.3. Deactivation of a "d" resolution

Source:
2018 S&T Committee Final Report

Background/Discussion:
In 2017, OWM received indication there exists in the commercial marketplace some Accuracy Class II scales equipped with a "d" value that differs from "e," which fail to round properly (i.e., to the nearest increment) if the "d" value is deactivated such that only the "e" value is displayed. OWM was made aware of this concern while researching a proposal on the 2017 S&T Committee's agenda which would require the value of "e" to be equal

to "d" on Class I and Class II scales used in a direct sale application (i.e., one in which both parties are present when the quantity is determined). That proposal, shown below, was later adopted and added to the Scales Code in 2018.

> ***S.1.2.2.2. Class I and II Scales used in Direct Sales. When accuracy Class I and II scales are used in direct sale applications the value of the displayed division "d" shall be equal to the value of the verification scale interval "e."***
>
> ***[Nonretroactive as of January 1, 2020. To become retroactive as of January 1, 2023]***
>
> **(Added 2017)**

The adoption of new paragraph S.1.2.2.2. in 2017 along with having learned of the possible round off problem resulting from the deactivation of the "d" resolution on some scales prompted OWM to propose adding a new specification paragraph to the Scales Code in 2018 to make officials and scale technicians aware of this concern.

At its 2018 NCWM Annual meeting, the NCWM voted to add OWM's proposed new paragraph S.1.2.2.3. Deactivation of a "d" Resolution, which prohibits the deactivation of a "d" resolution on a Class I or II scale equipped with a scale division value "d" that differs from the scale verification interval "e" if such action causes the scale to round improperly (i.e., to a value other than the closest "e" interval). The following paragraph was adopted at the 2018 NCWM Annual Conference:

> **S.1.2.2.3. Deactivation of a "d" Resolution. - It shall not be possible to deactivate the "d" resolution on a Class I or II scale equipped with a value of "d" that differs from "e" if such action affects the scale's ability to round digital values to the nearest minimum unit that can be indicated or recorded as required by paragraph G-S.5.2.2.**
>
> **(Added 20XX)**

Recommendation:
There are two suggested recommendations for the Sector to consider as follows:

1. Provide an explanation in the appropriate section of NCWM Publication 14 DES of how NTEP evaluators can readily determine if the "d" value on a Class I and Class II scale (in which the values of d and e are different) can be disabled (deactivated). Regarding this first recommendation, the Sector may also want to recommend the checklist portion of NCWM Publication 14 DES include an area for an evaluator to enter the values of "d" and "e" for Class I and Class II scales.

   ***Technical Advisor's note**:* As mentioned in last year's Weighing Sector Agenda for Item 1.a. 3200-2 Verification Scale Interval, OWM checked with one U.S. scale manufacturer concerning whether or not the Class I and II scales it currently produces would round properly if the "d" resolution were disabled (or deactivated) on those Class I and II scales in which the value of "d" differed from "e." The manufacturer reported that there was no possible means of disabling the "d" resolution on any of the models of Class I and II scales it manufactures in which the value of "d" and "e" are different.

2. Add new type evaluation criteria to NCWM Publication 14 DES that establishes whether a Class I and Class II scale rounds properly should the "d" value be deactivated.

Discussion/Conclusion:
Mr. Richard Harshman (NIST Technical Advisor) provided OWM's interpretation of new paragraph S.1.2.2.3., which had originally been proposed by OWM as the result of the NCWM adopting paragraph S.1.2.2.2. in 2017. Mr. Harshman explained that it was OWM's understanding that some, but not all Class I and Class II scales, in which the value "e" and "d" are different, fail to round properly (i.e., to the closest value of "e") if the "d" value is disabled or turned off. OWM felt it necessary to add paragraph S.1.2.2.3. to make officials and service technicians aware of this potential issue because the disabling of the "d" resolution only causes this effect on some, and not all, Class I and II scales.

This publication is available free of charge from: https://doi.org/10.6028/NIST.SP.1253

This publication is available free of charge from: https://doi.org/10.6028/NIST.SP.1253

Mr. Harshman thought it was important that the Sector first agree on the application of paragraph S.1.2.2.2. because he sensed from the discussions at last year's Sector meeting concerning the adoption of this paragraph there might be differences in how some might think the paragraph is intended to be applied. He provided a handout to members of the Sector which included page 2 of the NTEP Certificates of Conformance (CC) for two different Class II scales. Page 2 included a table listing the various models for which the CC applied and their associated values of "d" and "e." Some of the models included in the table had different values of "d" and "e" and others specified the same value. Mr. Harshman indicated that OWM's interpretation of paragraph S.1.2.2.2. is that only the models having the same value of "d" and "e" would comply with paragraph S.1.2.2.2. as of its date of enforcement. That is, paragraph S.1.2.2.2. would not allow someone to simply disable the "d" resolution so that only "e" were displayed to enable the scale to be used in a direct sale application. The paragraph specifies the two values must be equal and the information provided on CC confirms whether they are or aren't equal.

This prompted several members of the Sector to offer opinions on how they viewed the proper application of paragraph S.1.2.2.2. and to raise questions about OWM's interpretation of it. Most comments suggested a belief that it should be acceptable to disable the "d" value and still be able to comply with paragraph S.1.2.2.2. It was also suggested, and several members agreed, that the paragraph was improperly worded to specify "e" and "d" values had to be equal. The intent of paragraph S.1.2.2.2. is not to require "e" and "d" to be the same value, but rather the paragraph should specify when "e" and "d" are different values, only the "e" value can be displayed on Class I and Class II scales used in a direct sale application. Others agreed with this assertion, at which time Mr. Darrell Flocken (NCWM) and Mr. Harshman offered to work on a draft NCWM Form 15 together to amend the paragraph to reflect the Sector's technical position on this issue. It was also suggested that the mechanism to disable/enable the "d" resolution needed to be secured (i.e., behind whatever means of security is provided). A final concern relating to Sector's plan to amend paragraph S.1.2.2.2. to allow for the disabling of the "d" resolution is the effect this might have on the display of values for scales that differentiate values of "d" and "e." Mr. Flocken felt this concern could very easily be addressed by scale manufacturers. One means would be for manufacturers to use two different lenses; one which blocks the display of the "d" resolution and the other, which doesn't. Software would control the proper rounding of values on those versions in which the "d" value is disabled.

With respect to the two suggested recommendations pertaining to this item included on the agenda, no immediate changes are being recommended by the Sector to any parts of NCWM Publication 14 at this time. In discussing the first recommendation, Mr. Flocken stated that he believed the easiest means for an evaluator to determine if the "d" resolution has been disabled would be to include an area on the NTEP application for an applicant to provide values of "d' and "e." From this information, an evaluator would be able to tell if the resolution had been turned off on a scale under evaluation. Mr. Tom Buck (NTEP evaluator from OH) suggested possibly adding an area on the checklist for the evaluator to include values of "d" and "e." In discussing the second suggested recommendation, it was agreed that the procedures for testing discrimination in NCWM Publication 14, DES paragraph 44.2., and subparagraphs 44.2.1. and 44.2.2. would disclose if a scale is rounding improperly. It was also agreed that on a Class I and II scale in which the values of "e" and "d" are different and both values are displayed, there would be no need to test discrimination based on the "e" value because the "d" value would provide indication of the applied load between values of "e."

2. NCWM Publication 14 DES Section 31 Multi-Interval Scales

Source:
Measurement Canada/Canada (2015)

Background:
This item appeared as Agenda Item 10 on the 2015 NTEP Weighing Sector Agenda. During the 2015 Weighing Sector Meeting, Mr. Pascal Turgeon (MC) identified conflicts in various parts of NCWM Publication 14, DES Section 31. Multi-Interval Scales and suggested some changes be made to NCWM Publication 14 based on the type evaluation criteria developed and used by MC in their evaluation of a tare feature on a multi-interval scale. The conflicts identified by MC were disclosed during a routine general maintenance of the Canadian documents, and in particular, the requirements pertaining to multi-interval scales. Noting the importance of being careful not to change something

This publication is available free of charge from: https://doi.org/10.6028/NIST.SP.1253

that could conflict with NIST Handbook 44 or NCWM Publication 14 because of the U.S. and Canadian Mutual Recognition Agreement, MC requested an interpretation of the following sections of NCWM Publication 14, which it viewed as conflicting:

- The preamble to Section 31. contains examples and clauses that conflict with the requirements set out in 31.1. and 31.2. For example, the tare calculation example shows a net weight value that is not consistent with the scale interval of the weighing segment in which it falls, but both 31.1. and 31.2. require that it be consistent. The preamble also states that "Except for semi-automatic tare, all tare values shall not exceed the maximum capacity of the first weighing segment" whereas as 31.1.5. states "Tare may be taken to the maximum capacity of the smallest weighing range (segment) of the scale," leading to another contradiction
- Another issue with Section 31. is the applicability of 31.1. vs 31.2. It seems to be implied that either one or the other applies, depending on how the device operates, but it is not clear. It seems that 31.1. applies to devices that display all three values, while 31.2. is for devices that only display in one mode. However, review of the sub-clauses in each section show that this isn't correct (e.g. 31.1.9. refers to scales that only show net weight). We feel that Section 31 needs to be reviewed to consolidate redundant clauses and clearly state the applicability of 31.1. and 31.2.
- A final recommendation made by Mr. Pascal at the 2015 Sector meeting was to move 31.1.9. and all its subparts to 31.2. since all of 31.1.9. applies to scales that display or record only net weight values and 31.2. applies to scales that indicate in only one mode (gross or net). This recommendation to be considered by the work group as part of their review and further development of Section 31.

At its 2015 meeting, the Sector agreed to form a small work group to further develop the checklist and eliminate inconsistencies after reviewing NCWM Publication 14 Section 31 for consistency.

The following members of the Sector volunteered to participate on the work group at the meeting:

Mr. Tom Buck (Ohio)
Mr. Scott Davidson (Mettler-Toledo)
Mr. Paul Lewis (Rice Lake Weighing)
Mr. Pascal Turgeon (Measurement Canada) or (Justin Rae)
Mr. Rick Harshman (NIST Office of Weights and Measures)

Much of the Sector's discussion of this item at the 2016 WS meeting revolved around a revised draft document developed by NIST Technical Advisor Rick Harshman titled, "Principles of Tare - Multi-Interval and Multiple Range Scales" as shown in Appendix A. Mr. Harshman reported he had developed the draft document in hopes that, if agreement could be achieved on some basic principles of tare for the different types of tare operation (e.g., keyboard, push-button, etc.), it might be easier to identify in NCWM Publication 14 those requirements that deviate from the agreed-upon principles and those references could then be eliminated. That is, if U.S. scale manufacturers could agree on some basic principles of how tare is to operate on multi-interval and multiple range scales, these principles could quite possibly help resolve the conflicts that had been identified by MC in NCWM Publication 14. Should someone wish to take on this effort, these principles might also be used to help establish a means of grouping together the different tare requirements in NCWM Publication 14 by tare type so they are better organized and can be more easily followed.

Several of the scale representatives, upon being asked to provide input on the "Principles of Tare" document, indicated that they were not familiar enough with how their scales determined net weight under the different conditions outlined and would therefore need to consult with engineering staff and report back at some later date. Consequently, it was agreed this item could not be concluded during the 2016 meeting because it required additional input from the U.S. scale manufacturers. As a result, the Sector agreed this item would remain on its agenda in 2017 as a carryover item.

Mr. Robert Meadows (Kansas) and Mr. Eric Golden (Cardinal Scale Manufacturing, LLC) were added as new participants to the tare work group in 2016. Additionally, Mr. Darrell Flocken offered to assume lead of the work group after Mr. Harshman requested to step down due to a staffing shortage within the Legal Metrology Devices Program of OWM.

See the Sector's 2015 and 2016 Meeting Summary for additional details.

During the Sector's 2017 meeting, members received an update from Mr. Flocken on this item. He reported that he had been able to contact a few U.S. scale manufacturers to discuss with them the operational characteristics of tare taken on single range, multiple range, and multi-interval scales. This contact was made to try and determine if U.S. scale manufacturers are consistent in how tare is designed to operate for the different kinds of tare offered (e.g., semi-automatic, manually-entered, etc.) on scales manufactured by U.S. companies. Mr. Flocken noted that based upon those discussions, he did not believe U.S. scale manufacturers are consistent in how they've designed tare to operate for the different kinds of tare and particularly as an operational feature on multi-interval and multiple range scales. He further reported that he didn't believe scale manufacturers necessarily needed to agree on the specifics of how tare should operate to be able to resolve the conflicts identified by MC.

Mr. Flocken suggested the Sector consider splitting the item into two separate and distinct parts and trying first to resolve the more immediate concern of the two; that being, the existence of conflicts in NCWM Publication 14 DES associated with the taking of tare on multi-interval scales. The second part, which would likely take longer to resolve and could be worked on as time permits and at a less accelerated pace, is for the weights and measures community to agree on some basic principles of how different types of tare are to function on multi-interval and multiple ranges scales. Once basic principles of tare have been established, the Sector could then propose additional changes, as needed, to NIST Handbook 44 and NCWM Publication 14 DES. Members of the Sector agreed to the approach suggested by Mr. Flocken.

Mr. Flocken then shared his understanding of how single range scales, multiple range scales, and multi-interval scales typically function when different types of tare is taken. The following are some significant points made by Mr. Flocken relating to the conflicts identified by MC:

- There is an exception in NIST HB 44 to requiring the value of a scale division to be expressed as 1, 2, or 5, (or a decimal multiple or submultiple of 1, 2, or 5) for net weight indications and recorded representations calculated from the gross and tare weight indications when the scale division of the gross weight is different from the scale division of the tare weight(s) on multi-interval or multiple range scales. For example, a tare may be taken in a lower weighing segment or range and then subtracted from the gross indication in a higher weighing segment or range and the net weight result be mathematically correct and expressed to a value other than 1, 2, or 5 (or a decimal multiple or submultiple of 1, 2, or 5). This exception is provided in Scales Code paragraph S.1.2.1. Digital Indicating Scales, Units. MC requirements provide no such exception; so, in this regard, MC requirements are different than U.S.
- A rounding problem occurs on a multiple range scale having three ranges when the scale division values of the three ranges are 1 lb, 2 lb, and 5 lb, when the scale user enters a 1 lb tare and the applied load is in the 5 lb range. The problem created from this scenario is that the scale will zero the tare, which isn't permitted.
- Hand-entered tare cannot be taken above the capacity of weighing segment one on a multi-interval scale, however, semi-automatic tare (i.e., push-button tare) can be taken in any weighing segment.

Mr. Flocken acknowledged that different scale manufacturers may design tare to operate somewhat differently than he had described, especially with respect to multi-interval scales.

Mr. Flocken then requested Mr. Turgeon identify the different conflicting sections of NCWM Publication 14 DES. He also asked members of the Sector to consider possible solutions to those conflicts as Mr. Turgeon identified and described each one. The following three conflicts were identified, and possible solutions discussed:

1. The preamble to Section 31 contains examples and clauses that conflict with the requirements set out in subsections 31.1. and 31.2. For example, the tare calculation example shows a net weight value that is not consistent with the scale interval of the weighing segment in which it falls, but both 31.1. and 31.2. require that it be consistent.

This publication is available free of charge from: https://doi.org/10.6028/NIST.SP.1253

This publication is available free of charge from: https://doi.org/10.6028/NIST.SP.1253

Possible Solution: Identify within subsections 31.1. and 31.2. an appropriate location to add a sentence, similar to the following, appearing in NIST HB 44 Scales Code paragraph S.1.2.1.:

The requirement that the value of the scale division be expressed only as 1, 2, or 5, or a decimal multiple or submultiple of only 1, 2, or 5 does not apply to net weight indications and recorded representations that are calculated from gross and tare weight indications where the scale division of the gross weight is different from the scale division of the tare weight(s) on multi-interval or multiple range scales.

2. The preamble to Section 31 also states that "Except for semi-automatic tare, all tare values shall not exceed the maximum capacity of the first weighing segment (WS1); whereas, 31.1.5. states "Tare may be taken to the maximum capacity of the smallest weighing range (segment) of the scale," leading to another contradiction.

   Possible Solution: Consider adding the words, "Except for semi-automatic tare" as a lead into the sentence in 31.1.5.

3. Another issue with Section 31 is the applicability of 31.1. versus 31.2. It seems to be implied that either one or the other applies, depending on how the device operates, but it is not clear. It seems that 31.1. applies to devices that display all three values, while 31.2. is for devices that only display in one mode. However, review of the sub-clauses in each section show that this isn't correct (e.g., 31.1.9. refers to scales that only show net weight). We feel that Section 31 needs to be reviewed to consolidate redundant clauses and clearly state the applicability of subsections 31.1. and 31.2.

   Discussion/Possible Solution: It is believed that subsection 31.1., at the time when first added to Publication 14 was intended to apply to scales equipped with a separate display for gross-, tare-, and net- weight indications and that subsection 31.2. was intended to apply to single display scales. Most computing scales are equipped with only a single display and because 31.1.9. identifies "most computing scales" as the example of a scale that displays or records only net weight values, it is believed that 31.1.9. and all its subparts, should be part of subsection 31.2. rather than subsection 31.1. Consequently, the agreed upon solution for this conflict is to move 31.1.9. and all its subparts to subsection 31.2.

There was general agreement amongst Sector members that the possible solutions discussed for each of the conflicts identified by MC seemed appropriate. Mr. Flocken, acknowledging the fact that members seemed to agree on the solutions to these issues, suggested that a new proposal to amend the pertinent sections of Publication 14 be drafted and presented for consideration at the Sector's 2018 meeting. Members of the Sector agreed with his suggestion and Mr. Turgeon offered, at Mr. Flocken's request, to draft a proposal that would address each of the conflicts.

In concluding the discussion on this item, the NIST Technical Advisor shared the following concern: Any agreement on the principles of how tare is to function on multi-interval and multiple range scales needs to take into consideration the weights and measures model law. The law prohibits a person, by himself, or by his servant or agent, to sell, offer, or expose for sale less than the amount represented of any commodity or object. In the case of a multi-interval or multiple range scale having to change a tare entered in a lower weighing range or segment in which the net weight happens to fall, if by changing the tare value (e.g., the scale rounds the tare down because the net result is in a higher weighing range) it causes customers to receive less product than the amount represented, might the manufacturer of that scale be held responsible? Mr. Flocken and others agreed this concern needed to be part of the discussion on tare for multi-interval and multiple ranges scales.

Recommendation:
There are two recommendations suggested by the NIST Technical Advisor as follows:

Recommendation 1:
Members of the Sector are asked to consider the following proposed changes drafted and submitted by Mr. Turgeon in an effort to eliminate the existing conflicts in NCWM Publication 14 DES:

This publication is available free of charge from: https://doi.org/10.6028/NIST.SP.1253

31.1. **For scales that indicate in two modes (gross and net),** ~~T~~the requirements for the displayed scale division and the mathematical agreement of gross, tare, and net values depend on the information that can be displayed or recorded by the weighing system and may be summarized as follows:

31.1.1. The number of scale divisions in each weighing range (segment) must meet Table 3 of the Scales Code. ☐ Yes ☐ No ☐ N/A

31.1.2. For all weighing segments, e must equal d. ☐ Yes ☐ No ☐ N/A

~~**31.1.3. The scale division for gross and positive or negative net, weights for both increasing and decreasing loads must be displayed in scale divisions consistent with the weighing segment in which the weight falls.**~~ ~~☐ Yes ☐ No ☐ N/A~~

31.1.3. Weight indications at the break-over point of weighing ranges (segments) must be displayed properly. ☐ Yes ☐ No ☐ N/A

31.1.4. **Except for semi-automatic tare,** ~~**T**~~tare may be taken to the maximum capacity of the smallest weighing range (segment) of the scale. ☐ Yes ☐ No ☐ N/A

31.1.5. Keyboard, programmable, and digital, tare entries, and tare stored in memory for multiple transactions must be consistent with the displayed division size. Incorrect entries may be rounded to the nearest displayed scale division or rejected. ☐ Yes ☐ No ☐ N/A

31.1.6. Devices equipped with a tare capability must, at all times, indicate and record values that satisfy the equation net = gross - tare. ☐ Yes ☐ No ☐ N/A

31.1.7. Devices equipped with a semi-automatic (push-button) tare must meet the tolerances for net loads for any tare value. ☐ Yes ☐ No ☐ N/A

~~**31.1.8. Scales that display or record only net weight values (e.g., most computing scales.)**~~

~~**31.1.8.1. May take semi-automatic (push-button) tare and gross values to the internal resolution of the scale. Printed and displayed net weights shall be rounded to the nearest division. OR**~~ ~~☐ Yes ☐ No ☐ N/A~~

~~**31.1.8.2. May take all tare values to the displayed scale division. AND**~~ ~~☐ Yes ☐ No ☐ N/A~~

~~**31.1.8.3. Must always begin with the lowest weighing segment on the device regardless of the amount of tare that is taken.**~~ ~~☐ Yes ☐ No ☐ N/A~~

31.2. For scales that indicate in only one mode (gross or net) while under load, the scale division for the net weight, whether positive or negative, must be displayed in scale divisions consistent with the weighing range in which the net weight falls.

31.2.1. The number of scale divisions in each weighing range must meet Table 3 of the Scales Code. ☐ Yes ☐ No ☐ N/A

31.2.2. The scale divisions for both increasing and decreasing loads must be the same. ☐ Yes ☐ No ☐ N/A

This publication is available free of charge from: https://doi.org/10.6028/NIST.SP.1253

31.2.3.	Devices equipped with a tare capability must indicate and record values that satisfy the equation net = gross - tare.	☐ Yes ☐ No ☐ N/A
31.2.4.	Devices equipped with semi-automatic (push-button) tare must meet the tolerances for net loads for any tare taken up to the tare capacity of the scale.	☐ Yes ☐ No ☐ N/A
31.2.5.	Whenever semi-automatic (push-button) tare is taken and a scale is equipped with only a net display mode, the net weight values must always begin with the lowest weighing range on the device.	☐ Yes ☐ No ☐ N/A
31.2.6.	Keyboard tare entries must be consistent with the displayed scale division.	☐ Yes ☐ No ☐ N/A
31.2.7.	The scale division for the net weight, whether positive or negative, must be displayed in scale divisions consistent with the weighing range in which the net weight falls.	☐ Yes ☐ No ☐ N/A
31.2.8.	Weight indications at the break-over point of weighing ranges must be displayed properly.	☐ Yes ☐ No ☐ N/A
31.2.9.	For all weighing segments, e must equal d.	☐ Yes ☐ No ☐ N/A
31.2.10.	**Scales that display or record only net weight values (e.g., most computing scales.)**	
31.2.10.1.	**May take semi-automatic (push-button) tare and gross values to the internal resolution of the scale. Printed and displayed net weights shall be rounded to the nearest division. OR**	☐ **Yes** ☐ **No** ☐ **N/A**
31.2.10.2.	**May take all tare values to the displayed scale division. AND**	☐ **Yes** ☐ **No** ☐ **N/A**
31.2.10.3.	**Must always begin with the lowest weighing segment on the device regardless of the amount of tare that is taken.**	☐ **Yes** ☐ **No** ☐ **N/A**

31. Multiple Range Scales

Existing Table:

Capacity × d:
WR1 = 0 – 4 kg × 2 g
WR2 = 4 – 10 kg × 5 g
WR3 = 10 – 20 kg × 10 g

	Displayed and/or Printed	
	Preferred	Acceptable
Gross	13.380 kg	13.380 kg
Tare	−3.814 kg	−3.810* kg
Net	9.566 kg	9.570 kg

Corrected Table:

Capacity × d:
WR1 = 0 – 4 kg × 2 g
WR2 = **4~~1~~0** – 10 kg × 5 g
WR3 = **~~1~~0** – 20 kg × 10 g

	Displayed and/or Printed	
	Preferred	Acceptable
Gross	13.380 kg	13.380 kg
Tare	−3.814 kg	−3.810* kg
Net	9.566 kg	9.570 kg

Note: The example of the scale build shown in Section 32 is incorrect. Multiple range scales, by definition, are scales that have more than one range, where each range starts at 0 and finishes to max of that range. The build example should show each range starting at "0".

Recommendation 2:
Considering this item was split into two parts at last year's Sector meeting, the second recommendation is to determine if the need still exists (or do scale manufacturers find it of benefit) to try and agree on some basic principles of how different types of tare are to function on multi-interval and multiple range scales. Mr. Flocken reported last year that he did not believe US scale manufacturers are consistent in how they've designed tare to operate for the different kinds of tare and particularly as an operational feature on multi-interval and multiple range scales. An effort to develop some basic principles was started in 2016 through the drafting of the document titled, "Principles of Tare - Multi-Interval and Multiple Range Scales," which remains an attachment to this year's agenda. Is there a need to finish this effort? Might such principles be used to help establish a means of grouping together the different tare requirements in NCWM Publication 14 by tare, so they are better organized and can be more easily followed? Agreement on some basic principles might also be of use in identifying possible gaps in the evaluation of the different tare features associated with these scales.

Discussion/Conclusion:
Mr. Turgeon reviewed with members of the Sector the three remaining conflicts in NCWM Publication 14 that MC had earlier identified and the solutions to each of these conflicts that had been agreed upon at last year's Sector meeting. He then reviewed the proposed changes he had submitted for consideration at this year's meeting to resolve these issues. Members of the Sector agreed that each change recommended resolved its associated conflict. Consequently, the Sector agreed to recommend all changes as proposed for adoption by the NTEP Committee.

With regards to Recommendation 2, members of the Sector did not wish to continue efforts to try and come to agreement on some basic principles of tare operation on multiple range and multi-interval scales. Several members acknowledged having little time available in their schedules to allocate to this effort given the time needed to work on assignments of greater priority. It was stated that the document developed by OWM would be a useful starting point for future work should the need arise to complete this effort. The Sector agreed to withdraw this part of the item from its agenda.

This publication is available free of charge from: https://doi.org/10.6028/NIST.SP.1253

This publication is available free of charge from: https://doi.org/10.6028/NIST.SP.1253

NEW ITEMS

3. NCWM Publication 14 DES – Section 11. Indicating and Recording Elements – General Section 11.18.

Source:
NCWM/NTEP

Background:

NCWM Publication 14 identifies a test in Section DES, paragraph 11.18. that is not being performed. This test was identified by Measurement Canada in the mutual recognition evaluation checklist. NTEP does not perform this test; however, Measurement Canada would perform the test if appropriate for the device type submitted.

Recommendation:

It is recommended that paragraph 11.18., including all subparts of 11.18., be eliminated and all remaining paragraphs/subparagraphs of Section 11 be renumbered. The following changes are suggested:

~~**11.18. In the event the indicating or recording element can be disconnected from the load cell(s) or weighing/load-receiving element (W/LRE) input(s) without the use of a tool or breaking a security seal, any weight indication or other information (error codes) that remains on the display shall not be interpreted, printed, or stored in memory as a valid weight. This should be tested and verified by disconnecting the load cell(s) or W/LRE(s) while the indicating element is displaying; a negative gross weight or error condition, a zero load condition, a positive gross weight, and an overload condition.**~~	
~~**11.18.1. First remove power from the indicating element, disconnect the load cell input or W/LRE, then reapply power to the indicating element. The indicating element should display an error code or other meaningless information that cannot be interpreted, printed or stored as a correct weight.**~~	~~☐ Yes ☐ No ☐ N/A~~
~~**11.18.1.1. Perform the test with the display at a gross load zero indication.**~~	~~☐ Yes ☐ No ☐ N/A~~
~~**11.18.1.2. Repeat the test with the indicator displaying the following conditions prior to removal of the load cell input.**~~	~~☐ Yes ☐ No ☐ N/A~~
~~**11.18.1.3. A negative gross weight or behind zero error indication.**~~	~~☐ Yes ☐ No ☐ N/A~~
~~**11.18.1.4. A positive gross weight.**~~	~~☐ Yes ☐ No ☐ N/A~~
~~**11.18.1.5. An overcapacity indication.**~~	~~☐ Yes ☐ No ☐ N/A~~
~~**11.18.1.6. Reconnect the load cell. The display should indicate the correct weight or an error code or other meaningless information that cannot be interpreted, printed, or stored as a correct weight.**~~	~~☐ Yes ☐ No ☐ N/A~~

11.~~19~~**18**.

Discussion/Conclusion:
Mr. Darrell Flocken the submitter of this item, explained that the U.S. NTEP weighing evaluators are no longer performing any of the tests proposed for deletion by this item and nor are the MC evaluators performing these tests. U.S. evaluators no longer perform these tests for fear of damaging an applicant's equipment which could result in the evaluator and/or the NTEP lab being held responsible for the damage. It was also reported these procedures had been

developed by Germany many years ago at a time when it was believed the testing was needed; today this is not the case. Based upon these comments and hearing no opposition to deleting the procedures, the Sector agreed to recommend they be deleted.

4. NCWM Publication 14 DES – Technical Policy Section 8. Weighing Systems, Scales or Weighing/load-receiving elements Greater than 30 000 lb Capacity

Source:
Fairbanks Scales/Mr. Lou Straub

Background:
At the 2017 Weighing Sector meeting, Mr. Eric Golden (Cardinal Scales) submitted an item for consideration that would make changes to NCWM Publication 14. The Weighing Sector agreed with this proposal and platform lengths no shorter than seven feet were added to DES Technical Policy – Section 8, Subsections 8.2. and 8.3. During the review of this item in 2017, Mr. Golden questioned NTEP's policy in Subsections 8.2. (scales greater than 200,000 lb capacity), which specifies the platform length for vehicle scales is only 100 percent of the length evaluated; however, for railroad track and the railway track portion of combination scales, the platform length is 150 percent of device evaluated. Also, Subsection 8.1. (scales over 30,000 lb and up to and including 200,000 lb) permits a platform length for all scale types to 150 percent of the device evaluated.

Fairbanks Scales believes there is no difference in design of a non-module scale that supports the current restriction to 100% of the platform evaluated in Subsection 8.2. The structural design of a 200,000 lb vehicle scale is really no different when you cross the "200,000 lb threshold" and manufacture a vehicle scale with a 250,000 lb capacity. After further review of Subsections 8.1. and 8.2., why is the criteria ("nominal capacities", "spans", and "lengths") for vehicle scales over 30,000 lb and up to and including 200,000 lb different than the criteria for vehicle scales over 200,000 lb?

Mr. Golden has reviewed the meeting notes from all previous NTEP Weighing Sector Meetings and discussed this item with Mr. Jim Truex (NTEP Administrator) at the NCWM Annual Meeting in July. There does not appear to be any "documented" discussion or rationale on why the restrictions exist for "nominal capacities," "spans," and "lengths" in Subsection 8.2. for vehicle scales greater than 200,000 lb, but not for vehicle scales in Subsection 8.1. with capacities of 200,000 lb or less.

Mr. Golden believes a better solution would be to have two sections in NCWM Publication 14; a section addressing criteria for non-module truck scales and a section that addresses criteria for module scales.

Recommendation:
Amend Subsection 8.2. as follows:

8.2. Additional criteria for vehicle scales, railway track scales, combination vehicle/railway track scales, and other platform scales greater than 200 000 lb.

A CC Will Apply to All Models Having:

a. Nominal capacities **<u>up to 135% of</u>** ~~**no greater than**~~ the evaluated capacity.

b. Widths up to 120% of the width of the platform tested that of the device tested.[3]

c. Lengths no shorter than 7' and up to ~~**100**~~ **<u>150</u>**% of the length of the platform tested. [4] ~~**(for railway track and railway track portion of combination scales length to 150% of device evaluated.)**~~

d. Spans between sections of not more than 20% greater than the equipment evaluated. ~~**(for vehicle scale no greater than the device evaluated.)**~~

This publication is available free of charge from: https://doi.org/10.6028/NIST.SP.1253

Notes for d:

Another option would be to combine Subsections 8.1. and 8.2. The requirements found in NCWM Publication 14 could be included in one section that addresses scales over 30,000 lb. The following changes are suggested should members of the Sector prefer this alternative option:

8.1. Additional criteria for vehicle scales, railway track scales, combination vehicle/railway track scales and other platform scales over 30,000 lb ~~**and up to and including 200 000 lb**~~.

A CC Will Apply to All Models Having:

a. Nominal capacities up to 135% of evaluated capacity.

b. Widths up to 120% of the width of the platform tested.[3]

c. Lengths no shorter than 7' and up to 150% of the length of the platform tested.

d. A span between sections of not more than 20% greater than the equipment evaluated.

~~**8.2 Additional criteria for vehicle scales, railway track scales, combination vehicle/railway track scales, and other platform scales greater than 200 000 lb.**~~

~~**A CC Will Apply to All Models Having:**~~

~~**a. Nominal capacities no greater than the evaluated capacity.**~~

~~**b. Widths up to 120% of the width of the platform tested that of the device tested.[3]**~~

~~**c. Lengths no shorter than 7' and up to 100% of the length of the platform tested (for railway track and railway track portion of combination scales length to 150% of device evaluated.)**~~

~~**d. Spans between sections of not more than 20% greater than the equipment evaluated (for vehicle scale no greater than the device evaluated.)[4]**~~

Notes for d:

Delete footnote 4 at the bottom of page DES 7 since this particular footnote appears only in Subsection 8.2. and does not appear in Subsection 8.1. Footnote 3 would remain because it appears in Subsection 8.1.

Renumber all subsequent subsections.

Discussion/Conclusion:
Mr. Lou Straub (Fairbanks Scales) provided a brief summary of the reasons why he had submitted this item and asked if anyone was aware of why the NTEP criteria ("nominal capacities", "spans", and "lengths") for vehicle scales over 30,000 lb and up to and including 200,000 lb would be different than the criteria for vehicle scales over 200,000 lb. Mr. Straub reported, based upon conversations he had had with engineers at Fairbanks Scales, that the structural design of a 200,000 lb capacity vehicle scale is no different than that of a 250,000 lb capacity vehicle scale. From a search of previous Weighing Sector summaries, he could find no justification supporting the different criteria. He also reported that he had talked with Mr. Truex and that he too could not provide reason for the different criteria. Mr. Straub concluded by suggesting that the Sector recommend the changes proposed to Subsection 8.2., or, alternatively combine Subsections 8.1. and 8.2. as proposed by his alternative option. No one was able to provide any justification for the different criteria.

Mr. Flocken clarified that the subsections Mr. Straub was recommending being changed do not apply to modular scales. They only apply to complete scales and there are few complete vehicle scales manufactured today that have capacities greater than 200,000 lb. Mr. Flocken concluded the changes proposed would affect very few NTEP applications since most vehicle scales manufactured today having a capacity greater than 200,000 lb are modular scales. Mr. Flocken also commented that he is not currently in favor of merging Subsections 8.1. and 8.2 together, although this might be considered sometime in the future.

This publication is available free of charge from: https://doi.org/10.6028/NIST.SP.1253

Mr. Golden (commented he supported the proposal to make the requirements consistent for vehicle and railroad track scales.

The Sector agreed to recommend Mr. Straub's proposed changes to Subsection 8.2 and also agreed to possibly combine Subsections 8.1. and 8.2. at some future date.

5. Elimination of the Temperature Range that NTEP Initially Evaluates Devices From All Current and Future NTEP Certificates of Conformance (CC)

Source:
NCWM/NTEP

Background:
Compliance with temperature requirements by NTEP is limited to temperatures that are no lower than − 10 °C and no higher than 40 °C. This temperature range (− 10 °C to 40 °C) along with equivalent Fahrenheit values (14 °F to 104 °F) is currently being specified on completed NTEP Certificates of Conformance at the bottom of the "Standard Features and Options" box included on the CC providing the equipment for which the CC applies met the evaluation criteria when tested at the lower and higher temperatures specified by this range. Temperature limits is not a required marking on equipment meeting NTEP's (limited) temperature requirements during type evaluation. Additionally, the fact that NTEP does not perform testing at lower or higher temperatures than − 10 °C and 40 °C (14 °F to 104 °F) respectively, does not restrict use of the equipment once installed into commercial service to within this limited range of temperatures.

Equipment is allowed to be installed and used outside of the limited temperature testing range of NTEP providing the equipment: 1) passed the NTEP evaluation (i.e., NTEP performance tests) when tested at − 10 °C and 40 °C (14 °F to 104 °F); and 2) provides accurate results when tested in the field at temperatures outside the range in which NTEP performed temperature testing. NIST Handbook 44 paragraph G-UR.1.2. Environment. addresses this issue by requiring equipment to be suitable for the environment in which it is used, which includes at temperatures outside the limited range that NTEP performs its evaluation.

If equipment submitted to NTEP for type evaluation fails to comply with performance requirements when tested at − 10 °C and 40 °C (14 °F to 104 °F), the applicant is given the opportunity to specify to NTEP a narrower temperature range. **Note:** There are also situations where the device manufacturer requests a reduced temperature range within the limits specified in NIST Handbook 44, Scales Code, paragraph T.N.8.1.2. Once the applicant provides this information, NTEP then re-evaluates the equipment at the limits of that narrower range. Providing the equipment passes those performance tests, the applicant is required to mark the temperature limits on the equipment, which then, also limits use of that equipment to the temperature limits specified. In this case, the narrower temperature range is specified on the completed NTEP Certificate of Conformance at the bottom of the "Standard Features and Options" box rather than the normal temperature range NTEP initially used. If an official observes equipment being used outside the lower or higher temperatures specified by this narrower range, the official should stop the operator from using the device because a temperature limitation has been specified by the applicant and the equipment is being used inappropriately (outside of those limits).

NTEP has received several questions and complaints providing indication that the values − 10 °C to 40 °C (14 °F to 104 °F) are being misinterpreted as being the NTEP certified operating temperature. Specifying these values on a CC is not intended to limit the use of equipment to within these temperatures if testing in the field proves the equipment is accurate when tested outside of these temperatures. It is only when a narrower band has been specified and marked on the equipment that official action can be taken when that equipment is observed being used outside the range of temperatures marked.

This publication is available free of charge from: https://doi.org/10.6028/NIST.SP.1253

This publication is available free of charge from: https://doi.org/10.6028/NIST.SP.1253

Recommendation:
It is suggested that members of the Sector discuss the possibility of removing the "normal" temperature range values currently being listed at the bottom of the "Standard Features and Options" box on the first page of an NTEP Certificate of Conformance.

The "normal" temperature range in which NTEP evaluates equipment is: − 10° to +40° C.

It is also suggested Sector members discuss the possibility of only listing a reduced temperature range, if applicable, in this location on the certificate. The "normal" temperature would be mentioned in the Test Conditions portion of the CC as a test parameter.

Discussion/Conclusion:
Mr. Darrell Flocken (NCWM) explained to members of the Sector that NTEP performs temperature testing on equipment submitted for type evaluation at − 10 °C and 40 °C (14 °F and 104 °F) by placing the equipment into an environmental chamber and conducting performance testing at these temperatures. If the equipment passes performance testing at − 10 °C and 40 °C (14 °F and 104 °F), the temperature range "− 10 °C to 40 °C" (14°F - 104 °F) is being specified on completed NTEP Certificates of Conformance at the bottom of the "Standard Features and Options" box. This temperature range was never intended to limit use of the equipment in commercial or law-enforcement applications where temperature extremes might exceed the temperatures NTEP uses to perform temperature tests. Some, however, are interpreting this information as a limit for use, which it is not. NIST HB 44 specifies equipment must be suitable for the environment in which it is used, making it permissible for equipment to be installed and commercially used in temperatures outside the limits tested by NTEP providing the equipment can perform to within applicable NIST HB 44 tolerances when tested at these temperatures.

Mr. Flocken also clarified that if equipment submitted for type evaluation fails NTEP temperature testing at − 10 °C and 40 °C, an applicant can specify a narrower temperature range and NTEP will then test at that range. If the equipment passes performance tests at this narrower range, the submitter must specify the narrower range on the device for Class III, IIIL, and IIII scales in accordance with NIST HB 44 Scales Code Table 6.3.a. Marking Requirements or in the operating instructions for Class I and II scales (in accordance with HB 44 Scales Code paragraph T.N.8.1.1.).

Mr. Flocken noted this item only proposes when equipment is able to pass performance testing at NTEP's "normal" temperature testing limits of − 10 °C and 40 °C (14 °F and 104 °F) that the range of these temperatures will no longer be included on the CC at the bottom of the "Standard Features and Options" box. This temperature range will still be included on the CC on page 2 under the heading "Test Conditions." It is only when a narrower range is specified will that range appear in the "Standard Features and Options" box on a CC.

In consideration of the explanation provided, the Sector agreed to recommend future completed NTEP CC's exclude NTEP's "normal" temperature testing limits of − 10 °C and 40 °C (14 °F and 104 °F) in the "Standard Features and Options" box and to only provide this information under "Test Conditions" on page 2 of the CC. If, however, a narrower temperature range is specified, it will continue to be listed in the "Standard Features and Options" box on the CC.

ADDITIONAL ITEMS AS TIME ALLOWS

If time permits, OWM, NTEP and/or other groups would appreciate input from the WS on the weighing-related issues that are outlined in the remaining agenda items below. For each item in this section, the Sector is asked to review the item and consider providing input that might assist these groups.

This publication is available free of charge from: https://doi.org/10.6028/NIST.SP.1253

6. Scales Designed with Primary Scale Functions Accessible from a Sub-Screen and Marking of Operational Controls, Indications, and Features

Source:
NTEP/OWM

Background:
In the Fall of 2017, NTEP requested feedback from OWM concerning the zeroing features made available by design on a small capacity retail-computing scale having three different means to zero the scale as follows:

1. The power on/off switch accessed from one of the exterior sides of the scale identified as such using an acceptable symbol. There was also an adhesive label, which specified "zero" positioned immediately above the on/off power switch.

2. A push-button (semi-automatic) zero accessible from a sub-screen (not the main screen). To access the sub-screen, it was necessary for the operator to press a hidden touchscreen key (store logo) on the main screen.

3. Pressing and hold the weight value being displayed. This semi-automatic zeroing feature was not identified anywhere on the scale itself, but step by step procedures using this method were specified in the operational instructions of the owner's manual.

OWM responded by noting the following deficiencies based upon its review of the information and material (photographs) provided:

1. We consider the key that is hidden behind the store logo, which calls up a second page, an operational feature of the scale. It must be clearly and definitely identified as required by paragraph G-S.6 Marking Operational Controls, Indications, and Features.

2. If pressing and holding the weight indication resets the scale to zero, it too must be clearly and definitely identified as an operational feature of the scale.

Due to these deficiencies, we don't view the scale as being acceptable in either a direct sale or self-service application.

An additional concern was the fact that one of the zeroing features could only be accessed from a sub screen rather than the main screen. The zero function is a primary operational feature and one that should be very easily accessed. OWM does not think it is appropriate for primary operational features to be behind a main screen.

Discussion/Conclusion:
Comments received by Sector members were predominantly opposed to requiring primary scale functions to be only accessible from a main screen. There were comments suggesting current technology dictates less restrictive requirements. Training can teach scale operators how and where to access primary scale functions. One Sector member cautioned using the word "sub-screen" in any proposed new paragraph intended to require primary scale functions on the main screen. A dropdown window could be considered a sub-screen although it is really part of the main screen that simply drops down. He referred to this as a "slippery slope." Thus, if a primary scale function was part of the dropdown window, it would "technically" not be considered a sub-screen, although two actions would still be necessary to access the primary scale functions.

This publication is available free of charge from: https://doi.org/10.6028/NIST.SP.1253

7. Application of NIST Handbook 44 Requirements to Class I and II Scales Equipped with a Value of "d" that Differs from "e"

Source:
NTEP/OWM

Background:
In March 2018, NTEP received an inquiry from a scale manufacturer wanting to know which value, "d" or "e," should be used when applying HB 44 Scales Code requirements for Automatic Zero Tracking (AZT) and Center-of-Zero (CZ) on a Class II scale equipped with a value of "d" that differs from "e." Handbook 44 does not clearly identify whether the center of zero (CZ) or automatic zero tracking (AZT) requirements should be based upon "e" or "d." It is believed these requirements and others in HB 44 should always be based on the value of "e," regardless of whether the values of "e" and "d" are different or equal. Members of the Sector are asked to share their perspective on this issue.

The following HB 44 Scales Code paragraphs apply to the CZ and AZT, respectively:

S.1.1.1. Digital Indicating Elements.

(a) A digital zero indication shall represent a balance condition that is within ± ½ the value of the scale division.

(b) A digital indicating device shall either automatically maintain a "center-of-zero" condition to ± ¼ scale division or less, or have an auxiliary or supplemental "center-of-zero" indicator that defines a zero-balance condition to ± ¼ of a scale division or less. A "center-of-zero" indication may operate when zero is indicated for gross and/or net mode(s).

[Nonretroactive as of January 1, 1993]

(Amended 1992 and 2008)

S.2.1.3.2. Automatic Zero-Tracking Mechanism for Scales Manufactured on or after January 1, 2007 – The maximum load that can be "rezeroed," when either placed on or removed from the platform all at once under normal operating conditions, shall be:

(a) for vehicle, axle load, and railway track scales: 3.0 scale divisions; and

(b) for all other scales: 0.5 scale division.

(Added 2005)

To try and determine the application of OIML R-76 Nonautomatic weighing systems to these operational features, the NIST Technical Advisor conducted a review of R 76 and the following requirements are thought to apply to these features:

R-76 Center of Zero requirement:

4.5 Zero-setting and zero-tracking devices

An instrument may have one or more zero-setting devices and shall have not more than one zero-tracking device.

4.5.5 Zero indicating devices on an instrument with digital indication

An instrument with digital indication shall have a device that displays a special signal when the deviation from zero is not more than ± 0.25 *e*. This device may also work when zero is indicated after a tare operation.

This publication is available free of charge from: https://doi.org/10.6028/NIST.SP.1253

This device is not mandatory on an instrument that has an auxiliary indicating or a zero-tracking device provided that the rate of zero-tracking is not less than 0.25 d/second.

R -76 Automatic Zero Tracking requirement:

4.5.7 Zero-tracking devices

A zero-tracking device shall operate only when:

- the indication is at zero, or at a negative net value equivalent to gross zero;
- the equilibrium is stable; and
- the corrections are not more than 0.5 *d*/second.

When zero is indicated after a tare operation, the zero-tracking device may operate within a range of 4 % of Max around the actual zero value.

Discussion/Conclusion:
Mr. Richard Harshman (NIST Technical Advisor) provided an overview of the efforts put forth by OWM to determine which value, "e" or "d" are HB 44 Scales Code paragraphs S.1.1.1. and S.2.1.3.2. and other paragraphs in NIST HB 44 to be based when applying them to a Class I or II scale in which the values of "e" and "d" are different. NIST HB 44 does not clearly specify whether center-of-zero (COZ), automatic zero tracking (AZT), and other applicable NIST HB 44 requirements should be based on the value of "e" or "d." OWM believes, having had the opportunity to complete its review of available background information relating to this issue, the application of all requirements in NIST HB 44 should be based on a scale's verification scale interval "e."

Mr. Harshman noted NIST HB 44 Scales Code Table 3 Parameters for Accuracy Classes and Table 6 tolerances are based on verification scale interval "e." During the course of OWM's research into this issue, those offering opinions on the application of these two Scales Code tables had agreed their application was intended to be based on the value of "e." OWM supports the philosophy that the same requirements should apply to equipment used in the same application regardless of technology or design. Thus, given that the value of "e" establishes the permissible commercial uses of a scale (and also that NIST HB 44 tolerances are based on the value of "e"), in cases where "e" and "d" are different values, one shouldn't be basing the application of NIST HB 44 requirements on the "d" value because the "d" resolution only makes possible reading the "commercial" increment (e) to a finer resolution. Commercial transactions are to be based on values of "e."

Mr. Harshman noted that as a Weights and Measures Coordinator for OWM, he is expected to try and harmonize U.S. and International weights and measures requirements when it makes sense to do so in order to make it easier for U.S. manufacturers to sell their products abroad. He then reviewed with members of the Sector the different NIST HB 44 and OIML paragraphs that pertain to COZ and AZT and in doing so he further noted:

- OIML R76 paragraph 4.5.5. *Zero indicating devices on an instrument with digital indication* is believed to be the international equivalent to HB 44 Scales Code paragraph S.1.1.1., both of which address the COZ feature on a scale.

- OIML R76 paragraph 4.5.7. *Zero-tracking devices* is believed to be the international equivalent to HB 44 Scales Code paragraph S.2.1.3.2. Automatic Zero-Tracking Mechanism for Scales Manufactured on or after January 1, 2007, both of which address an operational AZT feature on a scale.

- OIML paragraphs 4.5.5. and 4.5.7. are very specific in providing indication of which value "e" or "d" is to be used when applying those paragraphs. For example, paragraph 4.5.5. specifies "not more than ± 0.25 ***e***" to describe a condition of the COZ requirement, whereas, one of the conditions listed beneath paragraph 4.5.7. is that the corrections cannot be "more than 0.5 ***d***/second." OWM's interpretation of the scale

resolution references in these two OIML paragraphs is that "e" is intended to mean "verification scale interval" and "d" is intended to mean "scale division."

Mr. Harshman also noted that OIML paragraph 4.5.5. seems to align with NIST HB 44 Scales Code paragraph S.1.1.1. OWM's interpretation of these two paragraphs is that they are very similar; both require COZ to be within one-quarter verification scale interval (e) or less. Thus, on a Class I or II scale in which the values of "e" and "d" are different, the application of both paragraphs should be based on the value of "e."

With respect to AZT, Mr. Harshman reported NIST HB 44 and OIML R76 approach testing quite differently and that US and OIML requirements do not closely align. The US AZT requirement (NIST HB 44 Scales Code paragraph S.2.1.3.2.) is based on an amount of test load that gets added or removed from a scale's load-receiving element all at once from a zero-load balance starting condition. The OIML AZT requirement (R76 paragraph 4.5.7.) is based on a maximum load and rate in which the AZT is allowed operate (i.e., the AZT corrections cannot exceed 0.5 *d*/second). These are significant differences not only in the test procedures, but also in the determination of amount of test load to be applied during tests. Scales Code paragraph S.2.1.3.2. bases the amount of test load to be applied and removed on a scale's verification scale interval (e). OIML R76 paragraph 4.5.7. bases the test load amount on a decimal fraction of the scale's division value (d). In conclusion, Mr. Harshman advised U.S. scale manufacturers to be aware of these differences and if intending to produce scales for both U.S. and international markets, the AZT requirements in both standards (NIST HB 44 and OIML R76) will need to be met. Mr. Flocken stated that he agreed with this conclusion.

A member of the Sector questioned if the NIST HB 44 AZT requirement should be changed to more closely align it with the requirement in R 76, but the few members responding to the question were not in favor of amending the NIST HB 44 requirement at this time.

Members of the Sector agreed with OWM's assessment that on Class I and II scales in which the values of "e" and "d" are different, the application of all NIST HB 44 requirements are to be based on the value of the verification scale interval "e."

8. Applying the v_{min} Relationship Formula Exception to the Automatic Weighing Instruments Code

***Note**: This item does not appear on the Weighting Sector's 2018 agenda because it was not submitted by an August 1st deadline to submit new items. Prior to the start of the Sector's 2018 meeting, it was agreed that this item should be discussed, and a possible recommendation made by the Sector on the item providing there was still meeting time available after all other items on the Sector's agenda had been discussed and completed. There was time available and for this reason members of the Sector agreed to consider this item during the 2018 meeting.*

Source:
NTEP/NCWM

Background:
NTEP received an inquiry from a manufacturer of an Automatic Weighing System (AWS) regarding the requirement of satisfying the v_{min} relationship formula when the complete instrument was evaluated to the full temperature range − 10 °C to 40 °C (14 °F to 104 °F). The manufacturer questioned why there was an exception to comply with the formula in the Scales Code and not in the Automatic Weighing Systems Code.

To answer the manufacturer's question, Mr. Darrell Flocken (NCWM) researched the implementation of the v_{min} relationship formula in both codes and found the following:

- Handbook 44, Scales Code, (2018 edition), page 2-19, paragraph ***S.5.4. Relationship of Minimum Load Cell Verification Interval Value to the Scale Division*** lists three criteria which, if satisfied, removes the need to comply with the formula.

This publication is available free of charge from: https://doi.org/10.6028/NIST.SP.1253

This publication is available free of charge from: https://doi.org/10.6028/NIST.SP.1253

- NTEP complies with this specification by not applying the formula during an NTEP evaluation providing that all three criteria have been satisfied. That is, the complete W/LRE or scale: 1) has undergone the temperature testing as described in T.N.8.1. and has performed within all applied tolerances; 2) has received an NTEP Certificate of Conformance; and 3) is equipped with an automatic zero tracking mechanism which cannot be inoperative in the normal weighing mode.

- Handbook 44, Automatic Weighing Systems (AWS) Code, (2018 edition), page 2-96, paragraph ***S.3.2. Load Cell Verification Interval Value*** includes the v_{min} relationship formula. This "Specification" paragraph, however, does not include the three exemption criteria that are included in paragraph S.5.4. of the Scales Code. Due to the absence of the exemption criteria appearing in paragraph S.3.2. of the AWS Code, the v_{min} relationship formula is to be applied regardless if the instrument has undergone temperature testing as specified in AWS Code paragraph T.7.1.

Additional research resulted in the following findings:

- The v_{min} relationship formula was adopted and added to the Scales Code in HB 44 based on the adoption of S&T agenda item 320-3 during the 1993 NCWM Annual Meeting. At the time of the adoption, the three criteria were not part of the adopted recommendation.

- During the 1996 NCWM Annual Meeting the S&T Committee's agenda included a voting item (i.e., Item 320-6) to amend Scales Code paragraph S.5.4. to exempt complete scales and weighing elements from having to comply with the $\mathbf{v_{min}}$ formula providing three conditions are met. The item was adopted, and the following text, identifying the three conditions, was added to Scales code paragraph S.5.4. in 1997 and remains today as part of the paragraph:

  This requirement does not apply to complete scales and weighing elements which satisfy the following criteria:

  1. The device has been evaluated for compliance with T.N.8.1. Temperature under the National Type Evaluation Program (NTEP);
  2. The device has received an NTEP Certificate of Conformance; and
  3. The device must be equipped with an automatic zero-setting mechanism which cannot be made inoperative in the normal weighing mode. (A test mode which permits the disabling of the automatic zero-setting mechanism is permissible, provided the scale cannot function normally while in this mode.)

- During the 1995 NCWM Annual Meeting the S&T Committee's agenda included a voting item to add a new tentative code into HB 44 that would apply to Automatic Weighing Systems (AWS). The item was adopted, and the AWS Code was added into HB 44 in 1996 and assigned a tentative status.

- During the 2004 NCWM Annual Meeting the S&T Committee's agenda included a voting item proposing to change the status of the AWS Code from "tentative" to "permanent." This the item was adopted, and the AWS Code became a permanent (enforceable) code in 2005.

Discussion/Conclusion:
Mr. Darrell Flocken reviewed the research findings and asked the members for any information or technical justification indicating why the Automatic Weighing Systems Code did not include the three criteria that are part of the Scales Code. All members agreed that the research implied that not adding the three exception criteria to the Automatic Weighing Systems Code was an oversight based on the timing of the inclusion of the Automatic Weighing Systems Code into NIST HB 44 and the adoption of the three criteria into the Scales Code.

The members of the Weighing Sector agreed to support the development and submittal of a proposal to recommend adding the three criteria to the Automatic Weighing Systems Code. Mr. Flocken agreed to develop the proposal on behalf of the Weighing Sector, and have it reviewed by Mr. Richard Harshman (NIST OWM) and Mr. Rob Upright (VPG Transducers and Sector chairman) before submitting it for consideration.

This publication is available free of charge from: https://doi.org/10.6028/NIST.SP.1253

Appendix A
to the 2018 Weighing Sector Summary

Principles of Tare – Multi-Interval and Multiple Range Scales

(This document was developed in 2016 by NIST Office of Weights and Measures.)

Multi-Interval Scales

Digital, Keyboard, and Programmable Tare

- It shall not be possible to enter or program a tare value that exceeds the capacity of WS1
- All tare values shall be equal to the value of the displayed scale division of WS1
  - If an attempt is made to enter a tare to a different value of d of WS1, the scale shall either reject the tare entry or round the tare entry to the nearest value of d of WS1
- Which of the following two bullet points in the box below is a correct statement (i.e. principle of tare) or should it be specified that either "rounding" method is appropriate?

1. A tare entered (or programmed) to the value of the displayed scale division of WS1 will automatically round to the closest value of the displayed scale division of the WS in which the net weight happens to fall once a gross load has been applied; *or*

2. A tare entered (or programmed) to the value of the displayed scale division of WS1 will be subtracted from the weight of a gross load and the net result then rounded to the closest value of the displayed scale division of the WS in which the net result happens to fall.

The example below provides indication of the difference in the net weight results depending on which value (tare or net) gets rounded.

Consider the following capacity statements marked on a multi-interval scale for this example:
WS1 0–1000 lb × 2 lb
WS2 1000 – 5000 lb × 5 lb

	Displayed and/or Printed	
	Actual	Acceptable
Gross	1010 lb	1010 lb
Tare	− 12 lb	− 12 lb
Net	998 lb	1000 lb

In this example, <u>if the scale rounds tare</u> to the closest value of the displayed division in the range of the resulting net weight, it would round the 12 lb tare to 10 lb and the net result would be 1 000 lb. However, if it is the <u>net weight that gets rounded</u> after subtraction of tare, the net weight would round to the closest 2 lb and the result would be 998 lb.

The decision is important becasuse if it decided that rounding is to the net weight (i.e., after subtraction of tare) then there is only one correct answer and that is 998 lb. If rounding of tare is permitted, then both

This publication is available free of charge from: https://doi.org/10.6028/NIST.SP.1253

net results would be considered correct (that is, 998 would still be considered acceptable due to the exception allowed by Scales Code paragraph S.1.2.1.)

NCWM Pub 14 DES Section 31. currently specifies the following:

In applying these principles, <u>it is acceptable to</u>:

- **Round the indicated and printed tare values to the nearest appropriate net weight scale division.**

In reviewing this example during the 2016 NTEP Lab meeting, Mr. Flocken indicated that the net result could be either 998 lb or 1 000 lb. For the net result to be 1 000 lb, the 12 lb tare must round to the nearest value of d in the second weighing range (10 lb). That is, rounding would have to occur before subtraction of tare from gross. If rounding occurred after subtraction, then the only acceptable answer would be 998 lb. A 2 lb rounding error is significant because it represents approximately 0.2 % of the net load. Review answers again with Mr. Flocken just to confirm he believes both answers are correct.

Which is correct? What is the rule or principle that applies?

- The value of the scale division for the net weight, whether positive or negative, must be displayed in scale divisions consistent with the weighing segment in which the net weight falls.
- If a tare value can be cleared when a load is on the platform, a clear indication that the tare value has been eliminated must be provided.
- In all cases, any displayed or recorded net weight value must be in mathematical agreement with the gross and tare values indicated or recorded (i.e., gross - tare = net).
  - This applies to both when a tare value and the resulting net weight value fall in the same WS (i.e., WS1) and when a tare value and the resulting net weight value fall in different WSs (e.g., tare in WS1 and the resulting net weight in WS2)
- A multi-interval scale may indicate and record tare weights in a lower weighing segment (WS) and net weights in a higher WS and provide a mathematically correct net weight result in accordance with the examples provided in HB 44 Scales Code paragraph S.1.2.1. Digital Indicating Scales, Units.

The following examples are provided to better show how these principles apply:

Consider the following capacity statements marked on a multi-interval scale for Examples A-D shown in the table below:

WS1	0-5 lb × 0.002 lb
WS2	5 – 10 lb × 0.005 lb
WS3	10 – 30 lb × 0.01 lb

Example A
Displayed and/or Printed

	Actual	Acceptable
Gross	13.38 lb	13.38 lb
Tare	− 0.122 lb	− 0.122 lb
Net	13.258 lb	13.26 lb

Example B
Displayed and/or Printed

	Actual	Acceptable
Gross	13.38 lb	13.38 lb
Tare	− 0.004 lb	− 0.004 lb
Net	13.376 lb	13.38 lb

In the "Acceptable" column 13.376 has been rounded up to the nearest scale division of WS3. *In this case,*

In the "Acceptable" column 13.258 lb has been rounded up to the nearest scale division of WS3.

the scale clears the tare value once the load is applied. The scale is required to provide a clear indication of that it has done so.

Example C
Displayed and/or Printed

	Actual	Acceptable
Gross	13.38 lb	13.38 lb
Tare	−0.006 lb	− 0.006 lb
Net	13.374 lb	13.37 lb

In the "Acceptable" column 13.374 has been rounded to the nearest scale division of WS3.

Example D
Displayed and/or Printed

	Actual	Acceptable
Gross	10.54 lb	10.54 lb
Tare	− 0.626 lb	− 0.626 lb
Net	9.914 lb	9.915 lb

In the "Acceptable" column 9.914 has been rounded to the nearest scale division of WS2.

In each of the examples shown above, the net values shown beneath both "Actual" and "Acceptable" would be considered the only acceptable results given the principles of tare on a multi-interval scale.

Push-button (Semi-automatic) Tare

- There are no capacity limitations for semi-automatic tare. Tare may be taken to the capacity of any WS.
- A semi-automatic tare rounds the weight of the object being tared to the closest value in the range where taken.
- Entries of tare shall be to the value of the displayed scale division of the WS in which the tare is taken and then rounded to the closest value of the displayed scale division in the WS in which the net weight results once a load is applied.
- In all cases, any displayed or recorded net weight value must be in mathematical agreement with the gross and tare values indicated or recorded (i.e., gross - tare = net).
- The value of the scale division for the net weight, whether positive or negative, must be displayed in scale divisions consistent with the weighing segment in which the net weight falls.

Multiple Range Scales

- It is important to think of each weighing range of a multiple range scale as if a single scale. There are multiple range scales in which the range is manually selected and there are those in which the range changes automatically with the amount of load applied.
  - For those in which the range is manually selected, tare can only be taken to the value of the displayed scale division of the range selected. An attempt to enter a keyboard (or programmable) tare value that differs from the value of the displayed scale division can either be rejected or rounded and accepted to the closest value of the displayed scale division.
  - For those in which the range changes automatically, the scale must only accept a tare entry to the displayed scale division of the range in which the tare value falls. A tare entry accepted in a lower WR will automatically round to the nearest displayed scale division of a higher weighing range once the application of a load causes the net weight indication to breach the higher WR. However, if the applied load is then decreased, the value of the tare scale division (that was previously rounded to the higher WR) must not change, nor shall the value of the displayed net weight scale division change to that of the lower WR.

This publication is available free of charge from: https://doi.org/10.6028/NIST.SP.1253

- If a tare value can be cleared when a load is on the platform, a clear indication that the tare value has been eliminated must be provided (*What constitutes a clear indication that tare has been removed?*

Both Multi-Interval and multiple range scales

- The tare mechanism shall only operate in a backward direction with respect to the zero-load balance condition of the scale.
- Scales must provide a clear indication that tare has been taken.
- If tare is set to zero, there must be a clear indication that tare has been removed.
- If a tare value can be cleared when a load is on the platform, a clear indication that the tare value has been eliminated must be provided. What is not known is how the scale will identify the quantity being displayed once tare is erased. I believe some scales revert back to a gross. What constitutes a clear indication that tare has been removed? Under what conditions would NTEP accept the deletion of a tare entry?
- Scales designed to automatically clear tare, shall be designed to prevent the clearing of tare until a complete transaction has been indicated.
- A pre-programmed tare cannot replace a manually entered tare without obvious indication.
- The tare weight plus the net weight must always equal the gross weight. In all cases, any displayed or recorded net weight value must be in mathematical agreement with the gross and tare values indicated or recorded (i.e., gross - tare = net).
- Keyboard and programmable tare entries must be visible at some point in the transaction so the entry can be verified. (Re: DES Section 48). Do you agree that this principle also applies to multi-interval and multiple range scales?

NEXT MEETING:

The Sector agreed to hold its next meeting:

August 20 and 21, 2019

Holiday Inn Tower Road
Denver, Colorado.

This publication is available free of charge from: https://doi.org/10.6028/NIST.SP.1253

This publication is available free of charge from: https://doi.org/10.6028/NIST.SP.1253

Appendix B
to the 2018 Weighing Sector Summary

Attendee Listing

Cary Ainsworth
Tufner Weighing Systems
232 Wexford Drive
Newnan, GA 30265
P. (770) 328-8792
E. cary@tufner.com

Bill Bagley
Ossid LLC
4000 College Road
Battleboro, NC 27809
P. (252) 446-6177 x 159
E. bill.bagley@promachbuilt.com

Doug Bliss
Mettler-Toledo, LLC
1150 Dearborn Drive
Worthington, OH 43085
P. (614) 438-4307
E. doug.bliss@mt.com

Tom Buck
Ohio Department of Agriculture
8995 East Main Street
Reynoldsburg, OH 43068
P. (614) 728-6290 F. (614) 728-6424
E. tom.buck@agri.ohio.gov

Jeremy Burns
Myriad Mobile
503 7th St. N., #300
Fargo, ND 58102
P. (651) 829-5229
E. jburns@myriadmobile.com

Chris Corbett
Cardinal Scale Manufacturing Co.
203 East Daugherty Street
Webb City, MO 64870
P. (417) 673-4631
E. ccorbett@cardet.com

Scott Davidson
Mettler-Toledo, LLC
1150 Dearborn Drive
Worthington, OH 43085
P. (614) 438-4387
E. scott.davidson@mt.com

Katya Delak
NIST, Office of Weights and Measures
100 Bureau Drive, MS 2600
Gaithersburg, MD 20899
P. (301) 975-2520
E. katya.delak@nist.gov

Brian Duncan
ECRS
277 Howard Street
Boone, NC 28607
P. (828) 265-2907
E. bduncan@ecrs.com

Holger Ferst
WIPOTEC-OCS, Inc.
825 Marathon Parkway
Lawrenceville, GA 30046
P. (678) 232-0745 F. (678) 344-8030
E. holger.ferst@wipotec.com

Darrell Flocken
National Conference on Weights and Measures
1135 M Street, Suite 110
Lincoln, NE 68508
P. (614) 620-6134
E. darrell.flocken@ncwm.com

Andy Gell
FOSS North America
6509 Flying Cloud Drive, Suite 130
Eden Prairie, MN 55344
P. (952) 974-9892
E. agell@fossna.com

Eric Golden
Cardinal Scale Manufacturing Co.
203 East Daugherty Street
Webb City, MO 64870
P. (417) 673-4631 x 211
E. egolden@cardet.com

Teri Gulke
Liquid Controls, LLC
105 Albrecht Drive
Lake Bluff, IL 60044
P. (847) 283-8346
E. tgulke@idexcorp.com

Richard Harshman
NIST, Office of Weights and Measures
100 Bureau Drive, MS 2600
Gaithersburg, MD 20899
P. (301) 975-8107
E. richard.harshman@nist.gov

Scott Henry
Zebra Technologies
809 Ashland Falls Drive
Monroe, GA 30656
P. (770) 800-1187
E. scott.henry@zebra.com

Ashir Isaakov
TSI, Inc.
500 Cardigan Road
Shoreview, MN 55126
P. (651) 490-2784
E. ashir.isaakov@tsi.com

Takashi Kawazoe
Digi America, Inc.
76 Veronica Avenue
Somerset, NJ 08873
P. (732) 828-3633
E. t.kawazoe@us.digi-group.com

Ed Luthy
Schenck Process, LLC
108 Wade Drive
Dover, OH 44622
P. (440) 241-0194
E. e.luthy@schenckprocess.com

Robert Meadows
Kansas Department of Agriculture
1320 Research Park Drive
Manhattan, KS 66502
P. (785) 564-6681
E. robert.meadows@ks.gov

Vere Miller
Mettler-Toledo, LLC
1150 Dearborn Drive
Worthington, OH 43085
P. (614) 438-4320
E. vere.miller@mt.com

Loren Minnich
Kansas Department of Agriculture
1320 Research Park Drive
Manhattan, KS 66502
P. (785) 564-6695
E. loren.minnich@ks.gov

Eric Morabito
NYS Weights & Measures
10B Airline Dirve
Albany, NY 12235
P. (518) 457-3452
E. eric.morabito@agriculture.ny.gov

Mark Morris
Vishay Transducers
4013 Lake Park Lane
Fallbrook, CA 92028
P. (858) 750-8834
E. mmorris999@yahoo.com

Adam Oldham
Gilbarco Veeder-Root
7300 W Friendly Avenue
PO Box 22087
Greensboro, NC 27410
P. (336) 547-5952
E. adam.oldham@gilbarco.com

James Pettinato
Technip FMC
1602 Wagner Ave.
Erie, PA 16510
P. (814) 898-5250
E. james.pettinato@technipfmc.com

Ben Raham
WIPOTEC-OCS, Inc.
825 Marathon Parkway
Lawrenceville, GA 30046
P. (678) 344-8300
E. ben.raham@wipotec.com

Sam Sagarsee
Emery Winslow Scale Company
4530 North 25th Street
Terre Haute, IN 47805
P. (812) 466-5265 x 112
E. srsagarsee@winslowth.com

Lou Straub
Fairbanks Scales, Inc.
104 Gunnery Court E
Ninety Six, SC 29666
P. (864) 543-2353
E. lstraub@fairbanks.com

This publication is available free of charge from: https://doi.org/10.6028/NIST.SP.1253

Pascal Turgeon
Measurement Canada
151 Tunney's Pasture Driveway
Ottawa, ON K1A 0C9
P. (613) 952-0636
E. pascal.turgeon@canada.ca

Robert Upright
VPG Transducers
42 Countryside Road
North Grafton, MA 01536
P. (508) 615-1185
E. rob.upright@vpgsensors.com

Russ Vires
Mettler-Toledo, LLC
1150 Dearborn Drive
Worthington, OH 43085
P. (614) 314-3765
E. russ.vires@mt.com

Jerry Wang
A&D Engineering, Inc.
1756 Automation Parkway
San Jose, CA 95131
P. (408) 263-5333
E. jwang@andonline.com

John Wind
Ossid LLC
4000 College Road
Battleboro, NC 27809
P. (252) 557-5230
E. john.wind@promachbuilt.com

Kraig Wooddell
Hobart
401 W Market Street
Troy, OH 45374
P. (937) 332-2238
E. kraig.wooddell@obartcorp.com

This publication is available free of charge from: https://doi.org/10.6028/NIST.SP.1253

This publication is available free of charge from: https://doi.org/10.6028/NIST.SP.1253

THIS PAGE INTENTIONALLY LEFT BLANK

Appendix G

National Type Evaluation Program (NTEP) Multiple Dimension Measuring Device (MDMD) Work Group Meeting Summary

June 8-9, 2018 - Columbus, Ohio

Table A
Table of Contents

Title of Contents **Page NTEP -F**

This publication is available free of charge from: https://doi.org/10.6028/NIST.SP.1253

This publication is available free of charge from: https://doi.org/10.6028/NIST.SP.1253

Table B
Glossary of Acronyms and Terms

Acronym	Term	Acronym	Term
NIST	National Institute of Standards and Technology	NTEP	National Type Evaluation Program
MDMD	Multiple Dimension Measuring Device	OIML	International Organization of Legal Metrology
MC	Measurement Canada	OWM	Office of Weights and Measures
MRA	Mutual Recognition Arrangement	R	Recommendation
NCWM	National Conference on Weights and Measures	WG	NCWM MDMD Work Group

INTRODUCTION

Mr. Robert Kennington (Quantronix, Inc. and WG Chair) welcomed everyone to the 2018 Work Group (WG) Meeting. Introductions were made around the room and the meeting was called to order.

1. Reiteration of NTEP MDMD Work Group Mission

Discussion:
Mr. Darrell Flocken (NTEP) reviewed the mission of the WG which is to deal with specific issues concerning MDMDs related to the requirements in NIST Handbook 44, NTEP type evaluation checklist in Publication 14, and maintaining the NTEP/MC Requirements Comparison Document.

2. Report – 2018 NCWM Interim Meeting

During the January 2018 NCWM Interim Meeting, the following proposal was given a Developing status. Members of this Work Group should track the activity of this proposal.

> **S.1.11. Provision for Sealing. - For devices and systems in which the configuration or calibration parameters can be changed by use of a removable digital storage device, security shall be provided for those parameters as specified in G-S.8.2. For parameters adjusted using other means, the following applies:**
>
> (a) ~~**A**~~ **The** device **or system** shall be designed with provision(s) for applying a security seal that must be broken, or for using other approved means of providing security (e.g., data change audit trail available at the time of inspection), before any change that detrimentally affects the metrological ~~integrity of the device~~ can be made to any measuring element.

Discussion:
Mr. Richard Harshman (NIST OWM) presented background information on this proposal. **Note:** This proposal accompanies a recommendation to adopt a new paragraph in the General Code. This proposed paragraph is G-S.8.2.; please refer to Appendix A, of this Summary Report, for more information on this item. Additional information on this item is also available in NCWM Publication 16, Specifications and Tolerances (S&T) Committee 2018 Interim Meeting Report.

This publication is available free of charge from: https://doi.org/10.6028/NIST.SP.1253

3. Report – Recent Measurement Canada Type Evaluation Activity

Discussion:
Mr. Pascal Turgeon (Measurement Canada) reported the following evaluation activity occurred since the May 2017 WG Meeting.

- 7 assignments were received having 3 for palletized freight static systems, 2 static system, and 2 for dynamic systems.

Mr. Turgeon informed the WG members that there is no current backlog for evaluation.

4. Report – Recent NTEP MDMD Type Evaluation Activity

Discussion:
Mr. Tom Buck (Ohio, NTEP Laboratory) reported the following evaluation activity occurred since the May 2017 WG Meeting.

- 12 assignments were received having 5 for static systems, 3 for dynamic systems, 3 in-motion, drive thru systems, and 1 handheld system.

- The evaluations were received from 6 manufacturers and resulted in the issuing of 8 new and 4 amended CCs.

CARRY OVER ITEMS

5. Review Meeting Summary from May 2017 Meeting.

Discussion:
Mr. Robert Kennington asked if there were any comments, corrections, or changes for the meeting minutes from the 2017 WG Meeting.

Mr. Kennington commented that it was agreed to during the 2017 meeting to add the statement to Publication 14, developed by the Software Sector (SS), regarding software separation. This statement could not be found in the 2018 edition of the publication. Mr. Flocken explained that the addition was withheld as the SS has asked the NTEP Committee for the creation of a separate checklist in Publication 14 dedicated to software issues. The outcome of the decision by the NTEP Committee, will determine if the additional will be added to the MDMD Checklist or become ~~part of the software checklist.~~

~~Hearing no other comments, a call for approval of the minutes was made and a positive vote was received from all voting members of the WG.~~

6. Review Changes to NIST, Handbook 44, and MDMD Code

During the NCWM, Annual Meeting in July 2017, the following proposals were adopted into Handbook 44.

S.1.7. Minimum <u>Measurement</u> ~~Lengths~~. – Except for entries of tare, the minimum **<u>measurement</u>** ~~**length to be measured**~~ by a device is 12 **<u>d</u>** divisions. The manufacturer may specify a longer minimum **<u>measurement</u>** ~~length~~. **<u>For multi-interval devices, this applies only to the first measuring segment.</u>**

S.1.8. Indications Below Minimum and Above Maximum. – When objects are smaller than the minimum dimensions identified in paragraph S.1.7. Minimum **<u>Measurement</u>** Lengths or larger than any of the maximum dimensions plus 9 d, and/or maximum volume marked on the device plus 9 d, or when a combination of

dimensions**, including tare,** for the object being measured exceeds the measurement capability of the device, the indicating or recording element shall either:

Discussion:
Mr. Darrell Flocken reviewed the proposal, shown above, that was voted on during the July 2017 NCWM Annual Meeting. The proposal was adopted and changes were incorporated into the 2018 Edition of NIST Handbook 44.

7. Review Changes to NCWM, Publication 14, MDMD Checklist

The following change, as agreed to during the May 2017 MDMD Work Group meeting, was made to the MDMD Checklist in the 2018 edition of Publication 14:

Removed reference to a requirement involving a "live" display in sentence 3.5. No other changes were made.

Discussion:
Mr. Darrell Flocken (NCWM NTEP Specialist) reviewed the single change made to the 2018 edition of Publication 14. Refer to the 2017, MDMD WG Meeting Summary for more details on this change.

8. Review Changes to Measurement Canada MDMD Code, and Terms and Conditions Documents

Discussion, as needed, regarding any changes to the Canadian MDMD Code since the Work Group's May 2017 meeting.

- 4.1. MC's decision to allow Cubetape PRO and Cubetape POS from Parcel Tools to be used in trade without being approved;
- 4.2. MC's decision on printed information required when requested by the Customer; and
- 4.3. Status on external consultation on MDMD Terms and Conditions.

Discussion:
Beyond changes to Canadian MDMD terms and Conditions, Mr. Pascal Turgeon (MC) wanted to inform the group on 3 other topics related to MDMDs:

4.1. Mr. Turgeon distributed a letter informing each member of the group that Cubetape PRO and Cubetape POS, manufactured by Parcel Tools, when used with a tape that displays measurement values (numbers) and barcodes, are to be considered as Linear Static Measures and are exempt from approval, examination and certification (Weights and Measures Regulations, paragraph 4(1)(o)). Consequently, in Canada, these Linear Static Measures can be used in trade just like a regular tape measure would be. It was also mentioned to be careful because some very similar measuring tools, depending on how they operate, are not Linear Static Measures and are not exempt from approval and must be certified by Measurement Canada before using it in trade. It was reiterated that in case of doubt, contact Measurement Canada for clarification;

4.2. On a few occasions, it was brought to Pascal's attention that some device owners did not provide complete information to customers. For this reason, Pascal wanted to clarify the requirement.

In Section 3.0 of the current "*Terms and conditions for the approval of multiple dimension measuring device"*, it states that when a customer is not present for the transaction, the trader must provide (in printed or in any other form (i.e. email)) to the customer, dimensions and/or volume, with units of measurement. What is meant by dimensions and/or volume is the values given by the MDMD. If your MDMD measures by 0.1 inch, then all measurements shall be by 0.1 in. For example, a box measuring 13.1 inches × 13.4 inches × 13.9 inches shall not be rounded to 13 inches × 13.5 inches x 14 inches. If the trader uses these values to provide a dimensional weight, it is acceptable, but the customer must be able, within a period of 30 days, to get the original values given by the MDMD.

This publication is available free of charge from: https://doi.org/10.6028/NIST.SP.1253

4.3. A new Terms and Conditions document is in the developing process. External consultation on the document is the next step and Pascal will keep the group inform when the document is ready for consultation.

Mr. Turgeon provided the following information to the manufacturers regarding changes in the evaluation process.

In the past, both in-motion and palletized freight devices have typically been regarded as being too large to test in the laboratory. A new policy is that all testing of these devices will be performed in the Measurement Canada laboratory.

For palletized freight this means that the device must be able to be installed in our high bay. It will require a self-supporting structure. These tests will be full sized tests of the device. In exchange for this, manufacturers can have the temperature tests done in the MC chamber. The chamber may require a scaled down version of the device. Manufacturers will continue to have the option of having the evaluation performed off-site; however, this will then require the temperature testing be done on a full-size device.

For in-motion devices the manufacturer can supply a portable belt which will be tested in the MC temperature chamber. In this situation, MC will allow some scaling of the device. However, for test conducted outside the temperature chamber (e.g. maximum belt speed and object size) scaling is not permitted.

9. Review OIML Activity Related to R129 CD2

Discussion, as needed, regarding activity of the OIML Committee responsible for revising the International Recommendation 129 for MDMD instruments

Discussion:
Mr. Richard Harshman (NIST OWM) and Mr. Pascal Turgeon (MC) both reported that progress on the revision to OIML R 129 is slow; however, the 3rd Committee Draft document is expected for distribution to the OIML committee members in July 2018.

10. Review update to NTEP / MC Requirements Comparison Document

Source:
Work Group

Status:
The NTEP/Measurement Canada Requirements Comparison document is unchanged since the Work Group's September 2015 meeting. A copy of the document is available on the NCWM website in the MDMD Work Groups, Meeting Archives.

Recommendation:
Review and determine if any NTEP or Measurement Canada changes to regulations or requirements impact the contents of this document.

Discussion:
Mr. Pascal Turgeon (MC) reported that no change has occurred to the Measurement Canada regulations that would require a change to this document. Mr. Flocken reported that no change has occurred to NIST Handbook 44 or NCWM Publication 14 that would require a change to this document. Based on this information, a review of the document was postponed until the next WG meeting.

11. Publication 14, MDMD Checklist

7.1. At the May 2017 meeting, a work group was created to review and make any recommendations for changes to NCWM Publication 14 based on the adopted changes to NIST Handbook 44 at the NCWM's, 2016 annual meeting. The work group was also charged with developing a recommendation for any changes to Publication 14

This publication is available free of charge from: https://doi.org/10.6028/NIST.SP.1253

This publication is available free of charge from: https://doi.org/10.6028/NIST.SP.1253

based on the adoption of a proposal for a change to Handbook 44, up for adoption during the NCWM's, 2017 annual meeting. Note: the proposed item was adopted during the NCWM's, 2017 Annual Meeting.

7.1.1.a. Item 1 - as adopted:

S.1.5. Value of Dimension /Volume Division Units. – The value of a device division "d" expressed in a unit of dimension shall be presented in a decimal format. The value of "d" for each measurement axis shall be in the same unit of measure and expressed as:

The subgroup reviewed the contents of Publication 14, 2017 edition and found the current wording.

3. Indicating and Recording Elements – General

Code Reference S.1.5.

3.10 Displayed and printed values of length, width, and height must be in the same unit of measure.

While this statement does not specifically mention the value of "d," the requirement that all measurement values must be in the same unit of measure implies that "d" must satisfy this specification.

Recommendation:
The subgroup recommends modifying sentence 3.10 by adding examples of units of measures as shown below.

3.10. Displayed and printed values of length, width, and height must be in the same unit of measure **(e.g., cm, in, etc.).**

Discussion:
Mr. Darrell Flocken reviewed the changes to paragraph S.1.5. of the MDMD Code of NIST Handbook 44 that had been adopted at the 2016 NCWM Annual Meeting. In addition, he presented the recommendation from the MDMD subgroup to amend NCWM Publication 14 to align it with the NIST Handbook 44 MDMD Code changes. The members of the WG agreed with the recommendation. Upon approval of the NTEP Committee, the adopted wording will be added into the 2019 edition of Publication.

7.1.1.b. Item 2 - as adopted:

Table S.4.1.a.
Marking Requirements for Multiple Dimension Measuring System

To Be Marked With	Multiple Dimension Measuring Equipment			
	Multiple Dimensions Measuring Device and Indicating Element in Same Housing	Indicating Element Not Permanently Attached to Multiple Dimension Measuring Element	Multiple Dimension Measuring Element Not Permanently Attached to the Indicating Element	Other Equipment (1)
Manufacturer's ID	x	x	x	x
Model Designation	x	x	x	x
Serial Number and Prefix	x	x	x	x (2)

This publication is available free of charge from: https://doi.org/10.6028/NIST.SP.1253

Table S.4.1.a.
Marking Requirements for Multiple Dimension Measuring System

Certificate of Conformance Number (8)	x	x	x	x (8)
Minimum and Maximum Dimensions for Each Axis (3)**(9)**	x	x	x	
Value of Measuring Division, d (for each axis and range) **(9)**	x	x	x	
Temperature Limits (4)**(9)**	x	x	x	
Minimum and Maximum Speed (5)**(9)**	x	x	x	
Special Application (6)**(9)**	x	x	x	
Limitation of Use (7)**(9)**	x	x	x	

(Amended 2016)

Table S.4.1.b.
Multiple Dimension Measuring Systems Notes for Table S.4.a.

1. Necessary to the dimension and/or volume measuring system, but having no effect on the measuring value (e.g., auxiliary remote display, keyboard, etc.)

2. Modules without "intelligence" on a modular system (e.g., printer, keyboard module, etc.) are not required to have serial numbers.

3. The minimum and maximum dimensions and measuring division (using upper and lowercase type) shall be marked. For example:
   Length: min ___ max ___ d___
   Width: min ___ max ___ d___
   Height: min ___ max ___ d___

4. Required if the range is other than − 10 °C to 40 °C (14 °F to 104 °F.)

5. Multiple dimension measuring devices, which require that the object or device be moved relative to one another, shall be marked with the minimum and maximum speeds at which the device is capable of making measurements that are within the applicable tolerances.

6. A device designed for a special application rather than general use shall be conspicuously marked with suitable words visible to the operator and the customer restricting its use to that application.

7. Materials, shapes, structures, combination of object dimensions, speed, spacing, minimum protrusion size, or object orientations that are inappropriate for the device or those that are appropriate.

8. Required only if a Certificate of Conformance has been issued for the equipment.

This publication is available free of charge from: https://doi.org/10.6028/NIST.SP.1253

9. This marking information may be readily accessible via the display. Instructions for displaying the information shall be described in the NTEP CC.

(Amended 2004**,** ~~and~~ 2008**, and 2016**)

The subgroup reviewed the contents of Publication 14, 2017 Edition and found that Table S.4.1.a. contains much the same information as that appearing in Table S.4.1.a. of NIST Handbook 44 except the footnote reference numbers do not match those in Table S.4.1.a. of HB 44. In addition, the corresponding footnotes in Table S.4.1.a. of Publication 14 are not expressed in tabular format as they are in NIST Handbook 44 (Table S.4.1.b.).

Recommendation:
The subgroup recommends that Table S.4.1.a. and all its corresponding footnotes located on page MDMD-6 of NCWM Publication 14, 2017 edition, be replaced with the two tables shown above to include adding the six new references to note 9 in Table S.4.1.a. and adding new note 9 to Table S.4.1.b.

In addition, the subgroup recommends removing the "Editor's Note" located directly after the current table in Pub 14.

Discussion:
Mr. Darrell Flocken reviewed the changes to Table S.4.1.a. and Table S.4.1.b. of the MDMD Code in NIST Handbook 44 (HB 44) that had been adopted at the 2016 NCWM Annual Meeting. In addition, he presented the recommendation from the MDMD subgroup to amend NCWM Publication 14 to align it with the HB 44 MDMD Code changes. The members of the WG agreed with the recommendation. Upon approval of the NTEP Committee, the adopted wording will be added into the 2019 edition of NCWM Publication 14.

7.1.1.c. Item 3 - as adopted:

S.2.2. Tare. – The tare function…

S.2.2.1. Maximum Value of Tare for Multi-Interval (Variable Division-Value) Devices. – A multi-interval device shall not accept any tare value greater than the maximum capacity of the lowest range of the axis for which the tare is being entered.
(Added 2016)

S.2.2.2. Net Values, Mathematical Agreement. - All net values resulting from a device subtracting a tare entry from a gross value indication shall be indicated and recorded, if so equipped, to the nearest division of the measuring range in which the net value occurs. In instances where the tare value entered on a multi-interval device is in a lower partial measuring range (or segment) than the gross indication, the system shall either alter the tare entered or round the net result after subtraction of the tare in order to achieve correct mathematical agreement.

The following example (of a multi-interval device having two partial measuring ranges for the "x" axis) and accompanying two tables are provided to further clarify the two acceptable methods a device can use to achieve mathematical agreement when tare has been entered in a lower partial measuring range than the gross indication:

Example multi-interval device having two partial measuring ranges for the "x" axis:

- **Partial measuring range 1: 0 – 100 inches by 0.2 inch**
- **Partial measuring range 2: 100 – 300 inches by 0.5 inch**

Table 1: Examples of Acceptable Altering of Tare to Achieve Accurate Net Indication

Gross Indication of Item Being Measured	Tare Entered	Value of Tare after Being Altered by the Device	Acceptable Net Indication
154.5 inches	41.2 inches	41.0 inches	113.5 inches
154.5 inches	41.4 inches	41.5 inches	113.0 inches

Table 2: Examples of Acceptable Rounding of the Net Result (Following the Subtraction of Tare) to Achieve Accurate Net Indication

Gross Indication of Item Being Measured	Tare Entered	Net Result Before Rounding *(Gross Indication Minus Tare Entered)*	Acceptable Net Indication Rounded to Nearest 0.5 inch
154.5 inches	41.2 inches	113.3 inches	113.5 inches
154.5 inches	41.4 inches	113.1 inches	113.0 inches

(Added 2016)

Amend Table S.4.1.a. Marking Requirements for Multiple Dimension Measuring Equipment as follows:

Table S.4.1.a.
Marking Requirements for Multiple Dimension Measuring Systems

To Be Marked With ⇓	Multiple Dimension Measuring Equipment			
	Multiple Dimension Measuring Device and Indicating Element in Same Housing	Indicating Element Not Permanently Attached to Multiple Dimension Measuring Element	Multiple Dimension Measuring Element Not Permanently Attached to the Indicating Element	Other Equipment (1)
Manufacturer's ID	x	x	x	x
Model Designation	x	x	x	x
Serial Number and Prefix	x	x	x	x (2)
Certificate of Conformance Number (8)	x	x	x	x (8)
Minimum and Maximum Dimensions for Each Axis **for Each Range in Each Axis** (3)	x	x	x	
Value of Measuring Division, d (for each axis and range)	x	x	x	
Temperature Limits (4)	x	x	x	
Minimum & Maximum speed (5)	x	x	x	
Special Application (6)	x	x	x	

This publication is available free of charge from: https://doi.org/10.6028/NIST.SP.1253

Limitation of Use (7)	x	x	x	

(Amended 2016)

Amend paragraph T.2.3. Multi-Interval (Variable Division-Value) Devices and add a new paragraph T.2.4. **Mixed-interval Devices.** ***as follows:***

T.2.3. Multi-interval (Variable Division-Value) Devices. – ~~**For multi-interval (variable division value)**~~ **devices, When there exists two or more partial measuring ranges (or segments) specified for any of the "dimensioning" axes (length (x), width (y), or height (z)) and the division values corresponding to those partial measuring ranges (or segments) within the same "dimensioning" axis differ,** the tolerance values ~~**are**~~ **shall be** based on the value of the ~~**device**~~ division of the range in use.

(Amended 2016)

T.2.4. Mixed-interval Devices. - For devices that measure to a different division value in at least one dimensioning axes and all axes are single range, the tolerance values shall be based on the value of the division of the axis in use.

(Added 2016)

The subgroup reviewed the contents of NCWM Publication 14, 2017 Edition and recommends the following four additions/changes:

Note: The recommended changes follow the format of the item as presented in the 2017 Edition of NIST Handbook 44, which is slightly different then that shown in the 2016 edition of NCWM Publication 16.

Recommendation 1:
Add the wording adopted in paragraph S.2.2.1. as a new paragraph numbered 8.6.

8.6. Maximum Value of Tare for Multi-Interval (Variable Division-Value) Devices. – A multi-interval device shall not accept any tare value greater than the maximum capacity of the lowest range of the axis for which the tare is being entered.

Recommendation 2:
Add the wording adopted in paragraph S.2.2.2. as a new paragraph numbered 8.7.

8.7. Net Values, Mathematical Agreement. - All net values resulting from a device subtracting a tare entry from a gross value indication shall be indicated and recorded, if so equipped, to the nearest division of the measuring range in which the net value occurs. In instances where the tare value entered on a multi-interval device is in a lower partial measuring range (or segment) than the gross indication, the system shall either alter the tare entered or round the net result after subtraction of the tare in order to achieve correct mathematical agreement.

Consider a multi-interval device having two partial measuring ranges for the "x" axis:

- **Partial measuring range 1: 0 – 100 inches by 0.2 inch**
- **Partial measuring range 2: 100 – 300 inches by 0.5 inch**

The following examples clarify the two acceptable methods this device can use to achieve mathematical agreement when tare has been entered in a lower partial measuring range than the gross indication:

Acceptable Example 1. Altering of a Tare Entry to Achieve Accurate Net Indication

This publication is available free of charge from: https://doi.org/10.6028/NIST.SP.1253

Gross Indication of Item Being Measured	Tare Entered	Value of Tare after Being Altered by the Device	Acceptable Net Indication
154.5 inches	41.2 inches	41.0 inches	113.5 inches
154.5 inches	41.4 inches	41.5 inches	113.0 inches

Acceptable Example 2. Rounding of the Net Result (Following the Subtraction of Tare) to Achieve Accurate Net Indication			
Gross Indication of Item Being Measured	Tare Entered	Net Result Before Rounding *(Gross Indication Minus Tare Entered)*	Acceptable Net Indication Rounded to Nearest 0.5 inch
154.5 inches	41.2 inches	113.3 inches	113.5 inches
154.5 inches	41.4 inches	113.1 inches	113.0 inches

Recommendation 3:
Amend Table S.4.1.a. Marking Requirements for Multiple Dimension Measuring Equipment:

Minimum and Maximum Dimensions for Each Axis **for Each Range in Each Axis** (3)	x	x	x	

Recommendation 4:
Amend the Checklist to align the new application of the tolerance value to Multi-Interval (Variable Division-Value) Devices and the new paragraph T.2.4. Mixed-interval Devices.

Discussion:
Mr. Flocken reviewed the adopted changes, as shown in agenda item 7.1.7.c, made to the MDMD Code in NIST Handbook from the NCWM, Annual Meeting in July 2016. In addition, he presented the 4 recommendations from the MDMD subgroup to change NCWM Publication 14 to align it with the code changes. The members of the WG agreed with the recommendation. Upon approval of the NTEP Committee, the adopted wording, as recommended in all 4 recommendations will be added into the 2019 edition of Publication.

It was noted during the subgroup's review of NCWM Publication 14 that there is no reference of the tolerance value defined in NIST Handbook 44 or how the tolerance is to be applied to single interval, multi-interval, or mixed Interval operation. The WG members agreed that the tolerance value, and how it should be applied to the instrument's operation should be included in the checklist. Mr. Richard Harshman (NIST Technical Advisor) recommended that this information be included in the checklist as this would be consistent with the checklists for other device types. He also suggested that the WG look at the checklist for Digital Electronic Scales to see if the same, or similar, wording could be used. It was suggested and agreed to that the subgroup would remain intact and develop and present a recommendation on this subject at next year's WG meeting. Mr. Harshman agreed to participate in the subgroup and Mr. Flocken agreed to Chair the group.

Members:

Mr. Sprague Ackley, Honeywell

This publication is available free of charge from: https://doi.org/10.6028/NIST.SP.1253

This publication is available free of charge from: https://doi.org/10.6028/NIST.SP.1253

Mr. Tom Buck, Ohio Dept. of Agriculture, NTEP Laboratory
Mr. Scott Davidson, Mettler-Toledo, LLC
Mr. Darrell Flocken, NTEP (Chair)
Mr. Richard Harshman, NIST Office of Weights and Measures
Mr. Tony Romeo, Datalogic USA, Inc.
Mr. Dick Suiter, Richard Suiter Consulting
Mr. Pascal Turgeon, Measurement Canada
Mr. Scott Wigginton, United Parcel Services

Information regarding the group's first conference call will be announced at a later date.

7.1.2. During the 2017 NCWM Annual Meeting, the following proposal to revise Handbook 44 was adopted:

Amend NIST Handbook 44, Multiple Dimension Measuring Devices Code as follows:

S.1.7. Minimum Measurement ~~Lengths~~. – Except for entries of tare, the minimum **measurement** ~~**length to be measured**~~ by a device is 12 **d** ~~divisions~~. The manufacturer may specify a longer minimum **measurement** ~~**length**~~. **For multi-interval devices, this applies only to the first measuring segment.**

S.1.8. Indications Below Minimum and Above Maximum. – When objects are smaller than the minimum dimensions identified in paragraph S.1.7. Minimum **Measurement** ~~**Lengths**~~ or larger than any of the maximum dimensions plus 9 d, and/or maximum volume marked on the device plus 9 d, or when a combination of dimensions**, including tare,** for the object being measured exceeds the measurement capability of the device, the indicating or recording element shall either:

The subgroup reviewed the contents of NCWM Publication 14, 2017 edition and found several places where the word "length" is used to define the measurement of the axes. The subgroup recommends the following changes:

Recommendation 1:

16. Measurement Speed Test

…

Test procedure:

…

10. Place a standard or test object with a length equal to the **maximum measurement**~~**length**~~ capacity on/in measurement area and observe, and print or record the results.

11. Place a standard or test object with a width equal to the **maximum measurement**~~**width**~~ capacity on/in measurement area and observe, and print or record the results.

12. Place a standard or test object with a height equal to the **maximum measurement**~~**height**~~ capacity on/in measurement area and observe, and print or record the results.

13. Place a standard or test object with a length equal to the **minimum measurement**~~**length**~~ capacity on/in measurement area and observe, and print or record the results.

14. Place a standard or test object with a width equal to the **minimum measurement**~~**width**~~ capacity on/in measurement area and observe, and print or record the results.

15. Place a standard or test object with a height equal to the **minimum measurement~~height~~** capacity on/in measurement area and observe, and print or record the results.

Recommendation 2:

Revise Footnote 6 in Table S.4.1.a. by removing the word "length"

[6] Multiple dimension measuring devices, which require that the object or device be moved relative to one another, shall be marked with the ~~length~~minimum and maximum speeds at which the device is capable of making measurements that are within the applicable tolerances.

Discussion:
Mr. Darrell Flocken reviewed the adopted changes, as shown in agenda item 7.1.2, made to the MDMD Code in NIST Handbook from the NCWM, Annual Meeting in July 2017. In addition, he presented the recommendation from the MDMD subgroup to change Publication 14 to align it with the code changes. The members of the WG agreed with the recommendation. Upon approval of the NTEP Committee, the adopted wording will be added into the 2019 edition of Publication.

12. Report on Progress from Multi-Interval Operation Requirements Subgroup

Source
Multi-Interval Operation Requirements Subgroup

Background /Discussion:
During the October 2014 meeting the work group agreed to form a small subgroup charged with the task to develop requirements that address multi-interval operation for inclusion into both HB-44 and Pub 14. Members of the subgroup are as follows: Mr. Darrell Flocken, Mr. Rick Harshman, Mr. Scott Davidson, Mr. Justin Rae, and Mr. Scott Wigginton.

Recommendation:
The Work Group will be updated on their progress.

Discussion:
Mr. Harshman (Chair of the subgroup) informed the members that based on the adoption of the information discussed in agenda Item 7, the work of this subgroup is complete and the subgroup has been disbanded. This item will not appear in the WG's 2019 agenda.

NEW ITEMS

13. In-Motion Forklift based Pallet Dimensioning

Recently, several NTEP Certificates of Conformance have been issued to devices designed to measure palletized freight while being transported (in-motion) on a forklift truck. The Ohio Lab, in conjunction with the device manufacturer, has created a series of tests used during the evaluation. Mr. Mike Kelly (Ohio NTEP Laboratory) will lead a discussion on these test procedures and the Work Group members are asked to consider if these tests are appropriate and if they should be added to the Publication 14 Checklist.

Discussion:
Mr. Mike Kelly (Ohio NTEP Laboratory) lead a discussion regarding the test procedures to evaluate a dimensioning system used to measure palletized freight while being transported (in-motion) by a lift truck. Mr. Kelly has worked with 3 separate manufacturers in the evaluation of this device type and as a result of this, has developed some tests specific to these devices. A brief overview of the new tests along with the interpretation of the results was presented. While all WG members agreed that additional tests are needed, some WG members felt that some of the proposed

This publication is available free of charge from: https://doi.org/10.6028/NIST.SP.1253

tests could be incorporated into existing test procedures. One example of this was a shift test; for devices that measure an object statically this test consists of placing the object at various locations within the measuring field. One of the tests proposed for the device under discussion was a positioning test where the fork truck was to be run thru the measuring area at different positions across the measuring field. Some members felt that a revision and, possibly, a renaming of the existing shift test, could provide the same intent. A copy of Mr. Kelly's presentation slides used in the discussion of this item can be found in Appendix B of this Summary Report. (Note: the attached presentation is not to be considered a recommendation to the WG but only information used by Mr. Kelly during the open discussion.)

After some discussion, it was mentioned that it may be in the best interest of the WG to form a subgroup focused on this topic. WG members agreed and a subgroup was formed. Mr. Bruce Budinger (Northrop Grumman/AOA Xinetics) volunteered to Chair the group.

Mr. Kelly offered to share illustrations/explanations of his test procedures with the subgroup as a starting point. It was agreed that the subgroup would try to have a completed draft proposal for consideration by the WG at the 2019 MDMD WG meeting.

Members

Mr. Sprague Ackley, Honeywell
Mr. Mike Kelly, Ohio Dept. of Agriculture, NTEP Laboratory
Mr. Bruce Budinger, Northrop Grumman / AOA Xinetics (Chair)
Mr. Tom Buck, OH Dept. of Agriculture, NTEP Laboratory
Mr. Scott Davidson, Mettler-Toledo, LLC
Mr. Darrell Flocken, NTEP
Mr. Richard Harshman, NIST Office of Weights and Measures
Mr. Robert Kennington, Quantronix, Inc.
Mr. Don Newell, NMFTA
Mr. Chris Senneff, Rice Lake Weighing Systems
Mr. Dick Suiter, Richard Suiter Consulting
Mr. Pascal Turgeon, Measurement Canada
Mr. Scott Wigginton, United Parcel Services

14. Misc. Items for General Discussion

During recent NTEP evaluations, the Ohio Lab has been asked to evaluate a few device features and/or functions. These included:

1. Handheld Device.
2. Manual entry of a measurement value.
3. Tare value entry.

Mike Kelly will lead a discussion on these tests with the Work Group Members regarding these items.

Discussion:
Mr. Mike Kelly (Ohio, NTEP Laboratory) led a discussion on the 3 items mentioned in the agenda. The summary of the discussion is provided below.

1. The discussion involved an example of a handheld device where a photo of the object to be measures was taken and then the object to be measured was manually adjusted to fit inside a box shaped outline on the screen of the device. This was then used to determine the objects dimensions. The result of the discussion

This publication is available free of charge from: https://doi.org/10.6028/NIST.SP.1253

This publication is available free of charge from: https://doi.org/10.6028/NIST.SP.1253

was that some manufacturers and users seemed okay with the operator adjusting box size on the screen; however, regulators and NIST did not.

2. The result of the discussion on this item was that a device where the measurements are hand entered would not need an NTEP CC. While this was the majority opinion, it was not the overall consensus of the WG.

3. This discussion involved the thought that the tare value could be entered into the device in a smaller size than the "d" value for the axis and that a tare value could only be entered for the horizonal axis. The result of the discussion was that, the tare value must be in the same unit of measurement and to the same resolution as "d." Additionally, it was agreed that while there seems to be no need for entering a manual tare in either the length or width axes, there was no consensus to define this limitation. It was also suggested that the height of the skid, for which a manual tare will be entered during testing should be a multiple of the value of the height resolution (d) of the device.

15. Removal of the "Provisional" (P) Status on the NTEP Certificates of Conformance

During the May 2017 MDMD WG meeting, the question was raised regarding the removal of the "Provisional" (P) status on existing NTEP Certificates of Conformance (CC). Specifically, what is the determining factor(s) necessary to end the issuing of provisional certificates and what impact would its removal have on current NTEP Certificates of Conformance?

Removal of the Provisional Status is based on the completeness of the NCWM Publication 14, checklist for the device; once the WG and the NTEP Administrator agree that the evaluation checklist addresses all requirements as mentioned in the most recent edition of *NIST, Handbook 44*, for the device type, NTEP will begin issuing certificates without the provisional status.

Additional, when the decision is made to stop issuing provisional certificates, NTEP will review all certificates with a provisional status: the review will consist of comparing the features, options, and test conditions, shown on the certificate, to the requirements in the most recent edition of the published checklist. The review would identify any new or changed requirements that were adopted after the issuance of each CC. Any new or changed requirement identified could result in the need for additional testing. The provisional status will be removed after any identified additional testing is successfully completed. If no additional testing is identified, the provisional status will be removed and NTEP will reissue the CC.

For additional information related to provisional certificates, refer to Publication 14, Administrative Policy, Section 12.3 and Section 14.

Discussion:
During last year's meeting, the WG members asked about the process of removing the Provisional Status for existing and future NTEP Certificates of Conformance (CC.) During this year's meeting, Mr. Darrell Flocken provided the WG member with the following information:

1. Provisional Status will be removed when either the WG or the NTEP Administrator feels the evaluation checklist in Publication 14 has addresses all current requirements as defined in the most recent edition of NIST Handbook 44.

2. Once agreed to stop issuing Provisional Certificates of Conformance, NTEP will review all "Active" CCs to compare the test criteria used to issue the CC to the test criteria listed in the most current edition of the Publication 14 Checklist. The intent is to identify all devices that may require additional testing based on new or revised test criteria developed after the CC was issued and deemed to be applicable to the model listed on the CC.

3. Upon completion of the CC review, the manufacturer will be informed, by email or letter, that additional testing is or is not required.

This publication is available free of charge from: https://doi.org/10.6028/NIST.SP.1253

a. If no additional testing is required, NTEP will reissue the CC with the Provisional Status removed.

b. If additional testing is deemed necessary, the manufacturer will be informed and given 90 days to schedule the additional tests. When all additional tests are successfully completed, NTEP will reissue the CC with the Provisional Status removed.

Note: in either case, the manufacturer will not be required to submit an application and will not be charged an application or certificate revision fee. The manufacturer will be responsible for any and all NTEP Lab fees associated with performing the required tests.

The WG members were informed that the decision to remove the Provisional status was made and NTEP will begin the CC review process. Manufacturers are not required to take any actions until they receive the letter informing them of the results of the CC review process.

CLOSING DISCUSSION

16. Review Meeting Activities and Conclusions

Discussion:
Nothing specific to report.

17. Define Next Steps

Discussion:
The assigned action items from this meeting are:

a. The continuation of the subgroup tasked with developing proposed changes to the MDMD Checklist in NCWM Publication 14 to include the device tolerance value and an explanation of how the tolerance value is to be applied during the evaluation of the different modes of operation, e.g., single interval, multi-interval, etc. The subgroup is tasked with developing a draft proposal for possible consideration by members at the WG's 2019 meeting.

b. A new subgroup will form to develop proposed changes to the MDMD Checklist for the evaluation of measuring palletized freight being transported (in-motion) on a lift truck. The subgroup is tasked with developing a draft proposal for possible consideration by members at the WG's 2019 meeting.

c. NTEP will begin the CC review and notification to manufacturers of the need for any additional testing for the intent of removing the Provisional status from all "Active" CCs.

18. Chairman's Discussion

Discussion:
Mr. Robert Kennington (WG Chair) informed the WG members that he will be resigning the Chair position at the end of this meeting. Mr. Darrell Flocken took the opportunity to explain the process to locate the WG's next Chair. In short, the process is:

1. All WG members will receive an email from Mr. Flocken, asking for nominations for the position. The member can nominate another WG member or they can nominate themselves.

2. Once the nomination deadline is reached, each nominee will be contacted to see if they wish to be considered for the position.

3. An email, including the name of each nominee will be sent to the WG members asking for their selection/vote.

4. Once the voting deadline is reached, the individual with the most votes will be informed after which an email will be sent out informing all WG Members of the new Chair.

The deadline for the process will be no later than mid-December 2018 as the new Chair must be "officially" appointed by the NCWM, Interim Meeting scheduled for January 2019.

Mr. Flocken also took the opportunity to remind the WG members that the WG is charged with appointing a WG member with the responsibilities of developing the meeting agenda and the meeting summary/minutes. This individual can be appointed by the WG members or the Chair. NTEP will assist in the transition of this responsibility and be available to provide ongoing support for the meeting and the documents.

19. Next Meeting

The work group is encouraged to recommend a date and location for the next work group meeting. The recommendation will be presented to the NTEP Committee for review and approval. The work group should maintain, at a minimum, a yearly meeting schedule.

Discussion:
The members agreed that the 2019 meeting will be Tuesday, May 7th from 1:00 pm to 5:00 pm and Wednesday, May 8th from 8:00 am to 5:00 pm. The meeting will be held at the Ohio Department of Agriculture, Administration Building, Conference room 129. (Alternative dates of May 14th and 15th were agreed to, if needed.)

This publication is available free of charge from: https://doi.org/10.6028/NIST.SP.1253

This publication is available free of charge from: https://doi.org/10.6028/NIST.SP.1253

THIS PAGE INTENTIONALLY LEFT BLANK

Appendix A – Meeting Agenda Items

2018 MDMD Work Group Agenda Item iii.:

OWM's proposals to address weighing and measuring equipment in which the configuration or calibration parameters can be changed using a removable digital storage device, such as an SD card, USB flash drive, etc., that must remain in the device for the device to be operational.

The OWM proposals are contained in Block 7 of the 2018 Specifications and Tolerances (S&T) Committee's Interim Report (NCWM Publication 16).

There are 19 items in Block 7. The main item is a proposal to add a new General Code paragraph G-S.8.2. as follows:

B7: GEN-2 D G-S.8.2. Devices and Systems Adjusted Using Removable Digital Device Storage

Item Under Consideration:
Modify the General Code as follows

G-S.8.2. Devices and Systems Adjusted Using Removable Digital Storage Device. – For devices and systems in which the configuration or calibration parameters can be changed by use of a removable digital storage device, such as a secure digital (SD) card, USB flash drive, etc., security shall be provided for those parameters using either (1) an event logger in the device; or (2) a physical seal that must be broken in order to remove the digital storage device from the device (or system). If security is provided using an event logger, the event logger shall include an event counter (000 to 999), the parameter ID, the date and time of the change, and the new value of the parameter. A printed copy of the information must be available on demand through the device or through another on-site device. In addition to providing a printed copy of the information, the information may be made available electronically. The event logger shall have a capacity to retain records equal to 10 times the number of sealable parameters in the device, but not more than 1000 records are required. (Note: Does not require 1000 changes to be stored for each parameter.)
(Added 20XX)

The purpose of all the remaining items in the block, including the proposed changes to MDMD code paragraph S.1.11. is to direct readers to the new General Code paragraph when they encounter a device or system that can be adjusted using a removable digital storage device.

- B7: MDM-1 D S.1.11. Provision for Sealing.

Item Under Consideration:
Modify Multiple Dimension Measuring Devices Code as follows:

S.1.11. Provision for Sealing. - For devices and systems in which the configuration or calibration parameters can be changed by use of a removable digital storage device, security shall be provided for those parameters as specified in G-S.8.2. For parameters adjusted using other means, the following applies:

(a) ~~A~~ **The** device **or system** shall be designed with provision(s) for applying a security seal that must be broken, or for using other approved means of providing security (e.g., data change audit trail available at the time of inspection), before any change that detrimentally affects the metrological integrity ~~of the device~~ can be made to any measuring element.

(b) Audit trails shall use the format set forth in Table S.1.11. Categories of Devices and Methods of Sealing for Multiple Dimension Measuring Systems.

(Amended 20XX)

This publication is available free of charge from: https://doi.org/10.6028/NIST.SP.1253

THIS PAGE INTENTIONALLY LEFT BLANK

This publication is available free of charge from: https://doi.org/10.6028/NIST.SP.1253

Appendix B

Presentation/Discussion on In-Motion Palletized Freight: In-Motion Palletized Freight

1. **Sensor / Emitter Obstruction Test:** (Section 12 Performance Test)

   Block all sensors or emitters one at a time.

   The purpose of this test is to verify the behavior of the DUT

2. **Forklift Sensor Test:** (Section 12 Performance Test)

   Block all sensors on the forklift one at a time.

   The purpose of this test is to verify the behavior of the DUT

3. **Static Object in the Field of View:** (Section 12 Performance Test)

   The purpose of this test is to verify the behavior of the DUT when a static object is placed in the field of view.

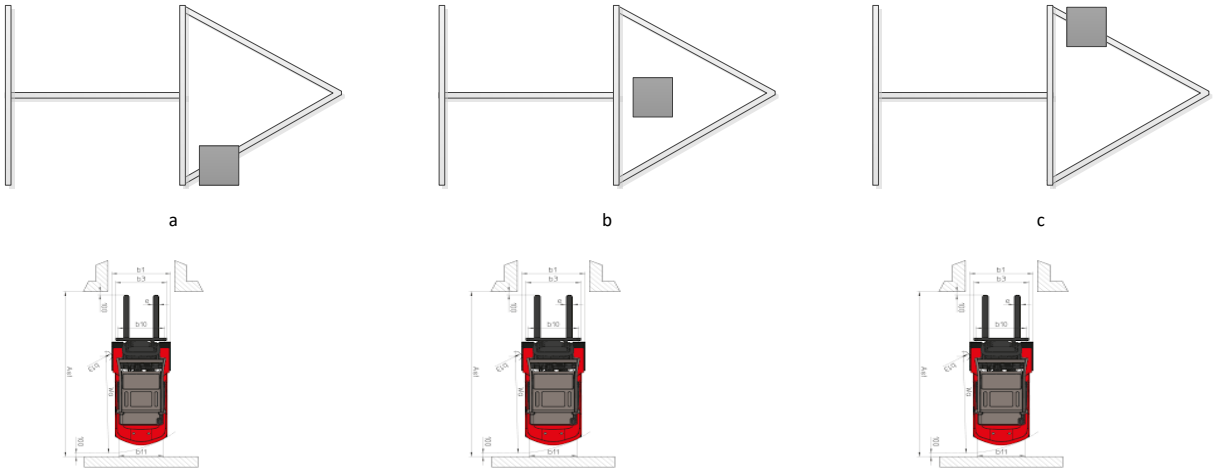

This publication is available free of charge from: https://doi.org/10.6028/NIST.SP.1253

This publication is available free of charge from: https://doi.org/10.6028/NIST.SP.1253

4. Moving Secondary Object: (Section 12 Performance Test)

The purpose of this test is to verify that appropriate feedback when a forklift and another moving object move through the field of view at the same time.

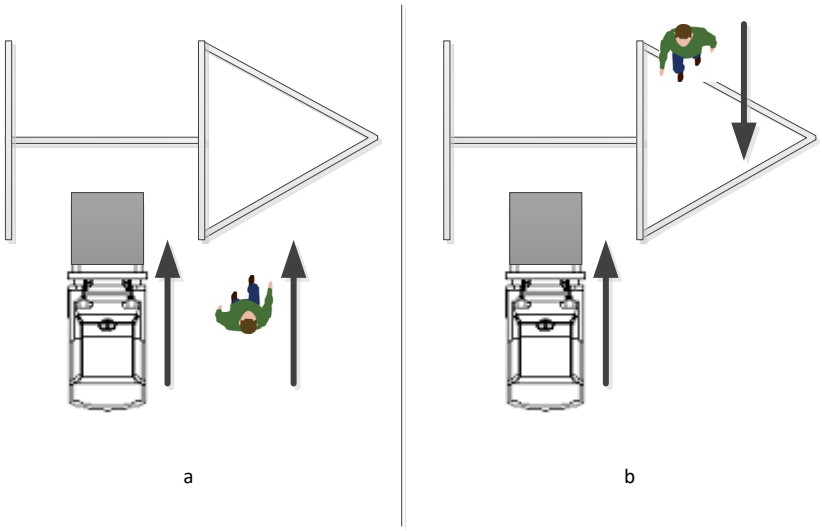

5. Forklift Orientation Test: **(**Section 13 Performance Test**)**

The purpose of this test is to verify that the system measures an object independent of the forklift orientation.

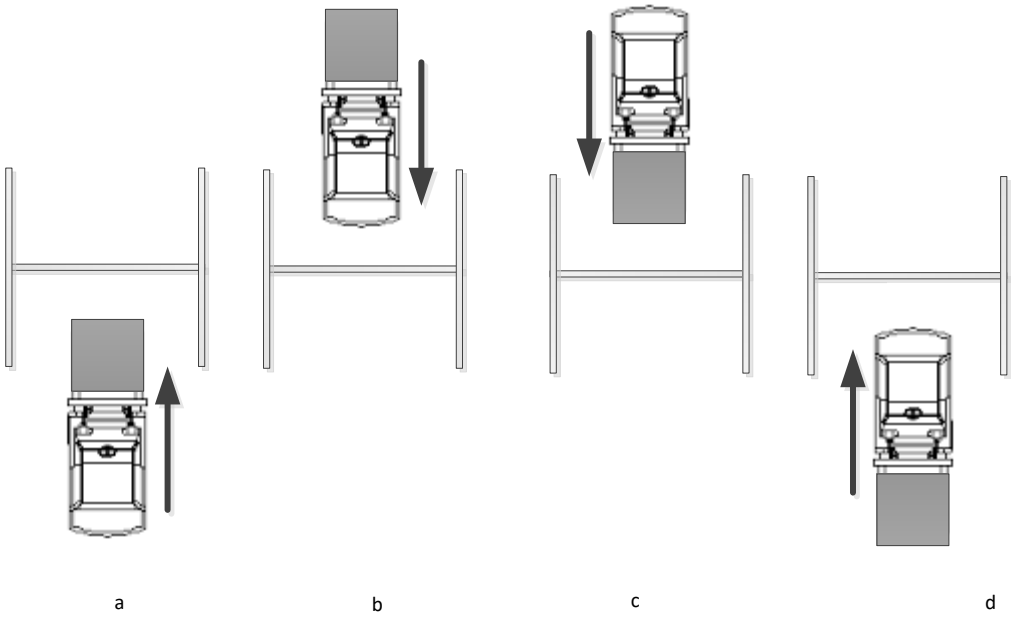

This publication is available free of charge from: https://doi.org/10.6028/NIST.SP.1253

6. Out of Bounds Test (Section 13 Position Test)

The purpose of this test is to verify that the system will indicate an out of bounds error when an object travels outside the floor markings.

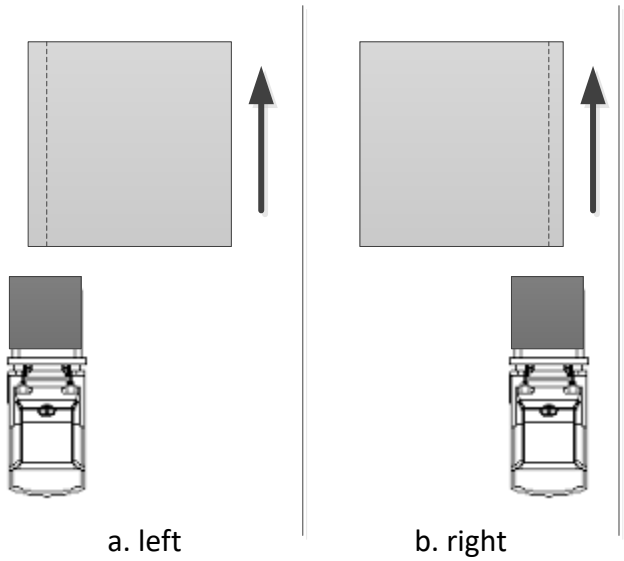

7. Shift Test Procedure: (Section 13 Position Test)

The purpose of this test is to verify that the system measures objects as they pass through the marked area on the floor.

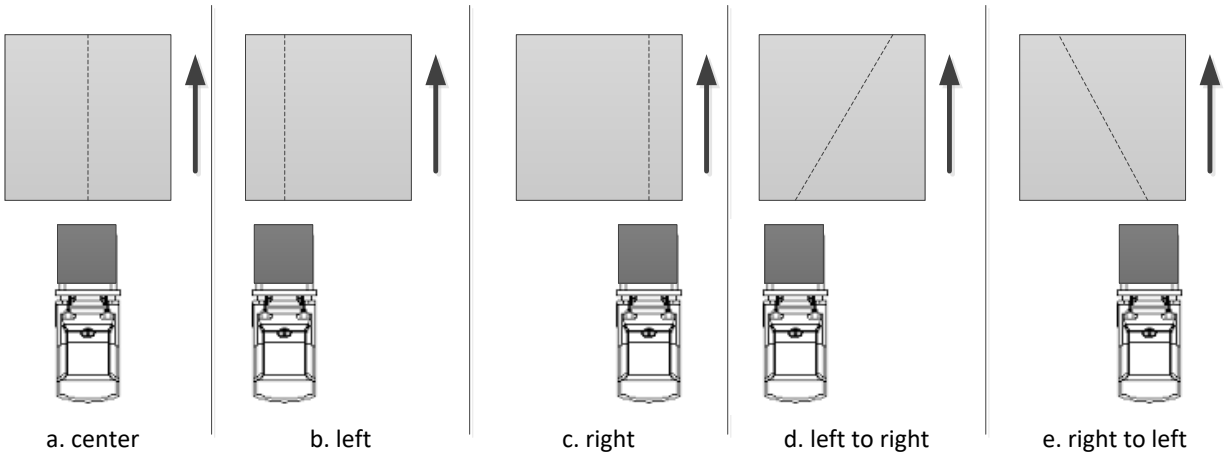

8. Minimum & Maximum (fork) Height from Floor (Section 21 Min/Max Test)

The purpose of this test is to verify that the system measures min. & max height off the floor.

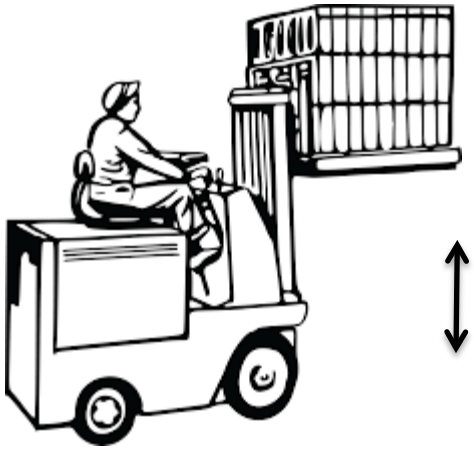

This publication is available free of charge from: https://doi.org/10.6028/NIST.SP.1253

Nominating Committee
2019 Final Report

Mr. Brett Gurney, Committee Chair
Utah

INTRODUCTION

The Nominating Committee (hereinafter referred to as the "committee") submits its Interim Report for consideration by National Conference on Weights and Measures (NCWM). This report contains the slate of nominees as officers of the corporation.

Table A identifies the agenda items by reference key, title of item, page number and the appendices by appendix designations.

Table A
Table of Contents

This publication is available free of charge from: https://doi.org/10.6028/NIST.SP.1253

This publication is available free of charge from: https://doi.org/10.6028/NIST.SP.1253

THIS PAGE INTENTIONALLY LEFT BLANK

Details of All Items
(In order by Reference Key)

NOM - NOMINATIONS

(This Item was adopted by unanimous Vote)

NOM-1 V Officer Nominations

Source:
Nominating Committee

Purpose:
Election of NCWM officers

Item Under Consideration:
The following slate of officers was selected by unanimous vote of the Committee:

Chairman-Elect:
Mr. Hal Prince, Florida Department of Agriculture and Consumer Services

Board of Directors Active Director - Southern: (4 years to complete the term vacated by Mr. Prince)
Mr. Gene Robertson, Mississippi Department of Agriculture

Board of Directors Active Director - Northeastern: (5 years)
Mr. Jack Walsh, Town of Wellesley, Massachusetts

Board of Directors Associate Membership Director: (3 years)
Mr. Chris Guay, Procter and Gamble Co.

Background/Discussion:
The Nominating Committee met in advance of the 2019 Interim Meeting at the St. Francis Hotel in Charleston, South Carolina at which time the Committee nominated the persons listed above to be officers of the 105th National Conference on Weights and Measures. In the selection of nominees from the active and associate membership, consideration was given to professional experience, qualifications of individuals, conference attendance and participation, and other factors considered to be important.

Mr. James Cassidy, Massachusetts | Committee Chair
Mr. Stephen Benjamin, North Carolina | Member
Mr. Mark Coyne, City of Brockton, Massachusetts | Member
Mr. Steven Harrington, Oregon | Member
Mr. Ron Hayes, Missouri | Member
Ms. Kristin Macey, California | Member
Mr. Ken Ramsburg, Maryland | Member

Nominating Committee

This publication is available free of charge from: https://doi.org/10.6028/NIST.SP.1253

This publication is available free of charge from: https://doi.org/10.6028/NIST.SP.1253

THIS PAGE INTENTIONALLY LEFT BLANK

2019 Annual Meeting Attendee List (as of 7/16/19)

July 14-18, 2019 / Milwaukee, Wisconsin

This publication is available free of charge from: https://doi.org/10.6028/NIST.SP.1253

Bala Panti Abdullahi
Federal Ministry of Industry, Trade and Investment
No 11 Kofo Abayomi St
Victoria Island, Lagos
E. balapanti@yahoo.com

Lena Abramov
Omni Specialty Packaging
10399 Hwy 1
Shreveport, LA 71115
P. (801) 336-8799
E. lena.abramov@omnisp.com

Kevin Adlaf
Archer Daniels Midland Company
1001 N. Brush College Rd
Decatur, IL 62521
P. (217) 451-7361
E. kevin.adlaf@adm.com

David Aguayo
San Luis Obispo County: Dept. of Ag and Weights and Measures
2156 Sierra Way
Suite A
San Luis Obispo, CA 93401
P. (805) 781-5922
E. daguayo@co.slo.ca.us

John Albert
Missouri Department of Agriculture
1616 Missouri Blvd
P.O. Box 630
Jefferson City, MO 65102
P. (573) 751-7062
E. John.Albert@mda.mo.gov

Mahesh Albuquerque
Colorado Div. of Oil and Public Safety
633 17th Street
Suite 500
Denver, CO 80202
P. (303) 318-8502
E. mahesh.albuquerque@state.co.us

Teresa Alleman
National Renewable Energy Laboratory
15013 Denver West Parkway
MS 1634
Golden, CO 80401
P. (303) 275-4514
E. teresa.alleman@nrel.gov

Ross Andersen
25 Moon Drive
Albany, NY 12205
P. (518) 869-7334
E. rjandersen12@gmail.com

Paige Anderson
National Association of Convenience Stores
1600 Duke St
Alexandria, VA 22314
P. (703) 518-4221
E. panderson@convenience.org

Michael Archer
Texas Department of Agriculture
1700 N. Congress Avenue
Austin, tx 78701
P. (713) 921-8200
E. michael.archer@texasagriculture.gov

Steven Argullin
Texas Department of Agriculture
1700 N. Congress Avenue
Austin, TX 78701
P. (956) 337-1299
E. Steven.Argullin@TexasAgriculture.gov

Jon Arnold
Intercomp Company
3839 County Road 116
Medina, MN 55340
P. (763) 476-2531
E. jona@intercompcompany.com

Tisha Arriaga
Marathon Petroleum Company
539 South Main Street
M-06-003
Findlay, OH 45840
P. (419) 421-5054
E. LEArriaga@marathonpetroleum.com

2019 Annual Meeting Attendee List (as of 7/16/19)

July 14-18, 2019 / Milwaukee, Wisconsin

This publication is available free of charge from: https://doi.org/10.6028/NIST.SP.1253

Ruben Arroyo
Riverside County Agriculture Commissioner
4080 Lemon St
Room 19 Basement
Riverside, CA 92501
P. (951) 955-3022
E. ruarroyo@rivco.org

David Au
Georgia Department of Agriculture
3150 US HWY 41 S
Tifton, GA 31794
P. (404) 754-2454
E. david.au@agr.georgia.gov

Brad Bachelder
Maine Department of Agriculture, Conservation and Forestry
28 State House Station
Augusta, ME 04333
P. (207) 287-7587
E. bradford.bachelder@maine.gov

Dennis Bachelder
API
200 Massachusette NW
Washington, DC 20001
P. (202) 682-8182
E. BachelderD@API.org

Ernesto Banta
LA County Agric Comm/ Weights & Measures
11012 Garfield Ave
South Gate, CA 90280
P. (562) 622-0410
E. ebanta@acwm.lacounty.gov

John Barton
NIST, Office of Weights and Measures
100 Bureau Drive
MS 2600
Gaithersburg, MD 20899-2600
P. (301) 975-4002
E. john.barton@nist.gov

Steve Becker
Schenck Process, LLC
746 E. Milwaukee Street
Whitewater, WI 53190
E. st.becker@schenckprocess.com

Steve Beitzel
Systems Associates, Inc.
1932 Industrial Drive
Libertyville, IL 60048
P. (847) 367-6650
E. sjbeitzel@systemsassoc.com

Vanessa Benchea
Florida Department of Agriculture and Consumer Services
4514 Oak Fair Blvd
Suite 140
Tampa, FL 33610
P. (813) 868-8263
E. Vanessa.Benchea@freshfromflorida.com

Stephen Benjamin
North Carolina Department of Agriculture
1050 Mail Service Center
Raleigh, NC 27699-1050
P. (919) 707-3226
E. steve.benjamin@ncagr.gov

Thomas Benson
Boston ISD Weights & Measures
1010 Massachusetts Avenue
Boston, MA 02118-2606
P. (617) 938-8628
E. thomasbenson17@yahoo.com

Joy Black
The Lubrizol Corporation
29400 Lakeland Boulevard
Wickliffe, OH 44092
P. (440) 364-6180
E. joy.black@lubrizol.com

Ann Boeckman
Kraft Heinz Foods Company
200 East Randolph St
Suite 7600
Chicago, IL 60601
P. (847) 646-2862
E. ann.boeckman@kraftheinz.com

This publication is available free of charge from: https://doi.org/10.6028/NIST.SP.1253

Mike Boehler
Nebraska: FSCP- Weights and Measures
301 Centennial Mall South
Box 94757
Lincoln, NE 68509-4575
P. (402) 471-3422
E. michael.boehler@nebraska.gov

Ethan Bogren
Westchester County Weights and Measures
35 Bonnieview St.
North Salem, ny 10560
P. (914) 995-2179
E. neb2@westchestergov.com

Dale Bohn
Flint Hills Resources
P O Box 64596
Saint Paul, MN 55164
P. (651) 480-3867
E. dale.bohn@fhr.com

Scott Boorse
PEI
6514 E. 69th Street
Tulsa, OK 74133
P. (918) 494-9696
E. sboorse@pei.org

David Boykin
NCR Corporation
200 Highway 74 South
Peachtree City, GA 30269
P. (770) 288-1556
E. db123643@ncr.com

Tory Brewer
West Virginia Weights and Measures, Div. of Labor
570 MacCorkle Ave W
St. Albans, WV 25177
P. (304) 722-0602
E. tory.d.brewer@wv.gov

Chad Brockman
Wisconsin Department of Ag and Consumer Protection
N 8059 Lake Breeze Dr
Sherwood, WI 54169
P. (920) 213-0043
E. chad.brockman@wisconsin.gov

Garret Brown
Alaska Division of Measurement Standards/CVE
12050 Industry Way
Bldg O Ste. 6
Anchorage, AK 99515
P. (907)365-1233
E. garret.brown@alaska.gov

Jerry Buendel
Retired
4317 Green Cove Street NW
Olympia, WA 98502-3525
P. (360) 866-2037
E. jbuendel@comcast.net

Luciano Burtini
Measurement Canada
2008 Matera Avenue
Kelowna, BC V1V 1W9
P. (250) 862-6557
E. luciano.burtini@canada.ca

Tina Butcher
NIST, Office of Weights and Measures
100 Bureau Drive
MS 2600
Gaithersburg, MD 20899-2600
P. (301) 975-2196
E. tina.butcher@nist.gov

Marc Buttler
Emerson Process Management - Micro Motion
7070 Winchester Circle
Boulder, CO 80301
P. (303) 581-1970
E. marc.buttler@emerson.com

Carmine Caferra
Berkeley Varitronics Systems, Inc.
255 Liberty Street
Metuchen, NJ 08840
P. (732) 548-3737
E. ccaferra@bvsystems.com

David Calix
NCR Corporation
5100 W. JB Hunt Drive
Suite 410
Rogers, AR 72758
P. (479) 372-8407
E. david.calix@ncr.com

This publication is available free of charge from: https://doi.org/10.6028/NIST.SP.1253

Bill Callaway
Crompco
6114 Mechanicsville Road
Mechanicsville, PA 18934
P. (610) 256-7185
E. bill.callaway@crompco.com

Loretta Carey
U.S. Food and Drug Administration
5100 Paint Branch Parkway
College Park, MD 20740
P. (240) 402-1799
E. loretta.carey@fda.hhs.gov

Stacy Carlsen
Marin County Department of Agriculture/W&M
1682 Novato Boulevard
Suite 150-A
Novato, CA 94947-7021
P. (415) 473-6700
E. scarlsen@marincounty.org

Craig Cavanaugh
Tuthill Transfer Systems
8825 Aviation Drive
Fort Wayne, IN 46809
P. (260) 747-7529
E. ccavanaugh@tuthill.com

Lorri Chavez
Central Garden & Pet/PFI
301 W. Osborn Road
Phoenix, AZ 85013
P. (602) 281-3759
E. lkchavez@central.com

Tim Chesser
Arkansas Bureau of Standards
4608 West 61st Street
Little Rock, AR 72209
P. (501) 570-1159
E. tim.chesser@agriculture.arkansas.gov

Delia Cioc
County of Riverside Ag Commissioner
3403 10th Street
Suite 701
Riverside, CA 92501
P. (951) 500-8805
E. dcioc@rivco.org

Alicia Clark
Wisconsin Department of Ag and Consumer Protection
PO Box 8911, 2811 Agriculture Dr
Madison, WI 53708
P. (608) 224-4938
E. alicia.clark@wisconsin.gov

Sean Clark
Yamato Corporation
6306 W. Eastwood Court
Mequon, WI 53092
P. (262) 825-2160
E. Sean_clark@yamatocorp.com

Ed Coleman
Tennessee Dept. of Ag
P.O. Box 40627
Melrose Station
Nashville, TN 37204
P. (615) 837-5109
E. ed.coleman@tn.gov

Garrett Cooper
San Diego County Dept of Agriculture, Weights and Measures
9325 Hazard Way
Suite 100
San Diego, CA 92123-1217
P. (858) 614-7726
E. garrett.cooper@sdcounty.ca.gov

Paul Cooper
Rinstrum Australia
41 Success Street
Acacia Ridge, QLD, 4060
P. 61 418 744345
E. paul.cooper@rinstrum.com

Lisa Corn
Texas Department of Agriculture
1700 N. Congress Avenue
Austin, TX 78701
P. (979) 542-3231
E. lisa.corn@texasagriculture.gov

This publication is available free of charge from: https://doi.org/10.6028/NIST.SP.1253

Ronny Cornelis
Curacao Government- Ministry of Economic Development
Pletteryweg 42
Willemstad,
E. ronny.cornelis@gobiernu.cw

Chuck Corr
Archer Daniels Midland Company
1251 Beaver Channel Parkway
Clinton, IA 52732
P. (563) 244-5208
E. corr@adm.com

Constantine Cotsoradis
Flint Hills Resources
7075 North 14th Avenue
Omaha, NE 68112
P. (316) 828-6133
E. constantine.cotsoradis@fhr.com

Carl Cotton
Measurement Canada
151 Tunney's Pasture Driveway
Standards Bldg #4
Ottawa, ON K1A 0C9
P. (613) 946-7327
E. carl.cotton@canada.ca

Konrad Crockford
North Dakota Public Service Commission
600 E. Boulevard Ave. Dept 408
Bismarck, ND 58505-0480
P. (701) 328-4097
E. kcrockford@nd.gov

Jeff Croy
Orange County Ag: Weights & Measures
222 E Bristol Lane
Orange, CA 92865
P. (714) 955-0102
E. jeff.croy@ocpw.ocgov.com

William Danderand
FedEx
1479 Town Center Dr
Suite D214
Lakeland, FL 33566
P. (630) 347-7745
E. william.danderand@fedex.com

Jacques Daniel
Wisconsin Department of Ag and Consumer Protection
825 E River Drive, Apt #25
DePere, WI 54115
P. (920) 360-2871
E. jacques.daniel@wisconsin.gov

Jeff Davis
ExxonMobil
22777 Springswoods Village Parkway
E3.4B.357
Spring, TX 77389
P. (832) 624-2485
E. jeff.a.davis@exxonmobil.com

Jack de Wit
Yolo County/California
70 Cottonwood Street
Woodland, CA 95695
P. (530) 666-8140
E. jack.dewit@yolocounty.org

Rob DeRubeis
Michigan Department of Agriculture
940 Venture Lane
Williamston, MI 48895-2451
P. (517) 655-8202
E. derubeisr@michigan.gov

Owen DeWitt
FlintLoc
P.O. Box 2565
Georgetown, TX 78627
P. (855) 435-4685
E. Odewitt@flintloc.com

Kurt Dorrough
Napa County Agricultural Commisioner's Office
1710 Soscol Ave
Suite 3
Napa, CA 94558
P. (707) 253-4958
E. kurt.dorrough@countyofnapa.com

This publication is available free of charge from: https://doi.org/10.6028/NIST.SP.1253

Nick Eberle
Wisconsin Department of Ag and Consumer Protection
127 Linderwell Ct
Poynette, WI 53955
P. (608) 566-7000
E. nicholas.eberle@wisconsin.gov

Chuck Ehrlich
NIST, Office of Weights and Measures
100 Bureau Drive
MS 2600
Gaithersburg, MD 20899-2600
P. (301) 975-4834
E. charles.ehrlich@nist.gov

John Eichberger
Fuels Institute
1600 Duke Street
Suite 700
Alexandria, VA 22314
P. (703) 518-7971
E. jeichberger@fuelsinstitute.org

Tim Elliott
Washington State Department of Agriculture
PO Box 42560
Olympia, WA 98504-2560
P. (360) 902-1984
E. telliott@agr.wa.gov

Jacki Fee
Cargill, Incorporated
19515 Frances Circle
Omaha, NE 68130
P. (402) 281-5869
E. jacki_m_fee@cargill.com

Scott Fenwick
National Biodiesel Board
605 Clark Ave
PO Box 104848
Jefferson City, MO 65109
P. (573) 418-9677
E. sfenwick@biodiesel.org

Scott Ferguson
Michigan Department of Agriculture
940 Venture Lane
Williamston, MI 48895-2451
P. (517)655-8202
E. fergusons9@michigan.gov

David Fields
NCR
864 Spring Street NW
Atlanta, GA 30308
P. (706) 763-9314
E. David.Fields@ncr.com

Bobby Fletcher, Jr., Ph.D
Louisiana Dept. of Agriculture
Office of Agro-Consumer Services
5825 Florida Blvd, Suite 5000
Baton Rouge, LA 70806
P. (225) 925-3780
E. bfletcher@ldaf.state.la.us

Jason Flint
New Jersey Weights & Measures
1261 Routes 1 & 9 South
Avenel, NJ 07001
E. flintj@dca.lps.state.nj.us

Darrell Flocken
National Conference on Weights and Measures, Inc.
3931 Cedric Lane
Dublin, OH 43016
P. (614) 620-6134
E. darrell.flocken@ncwm.net

Kurt Floren
LA County Agric Comm/Weights & Measures
12300 Lower Azusa Road
Arcadia, CA 91006
P. (626) 575-5451
E. kfloren@acwm.lacounty.gov

This publication is available free of charge from: https://doi.org/10.6028/NIST.SP.1253

Paul Floyd
Louisiana Dept. of Agriculture
5825 Florida Blvd, Suite 5000
Office of Agro-Consumer Services
Office of Agro-Consumer Services
Baton Rouge, LA 70806
P. (225) 925-3780
E. pfloyd@ldaf.state.la.us

Brad Fryburger
Southern Il Scale
430 W South Ave
Noble, IL 62868
P. (618) 723-2303
E. bradf@southernilscale.com

Ron Gallon
Zenner Performance Meters, Inc.
1910 E Westward Ave
PO Box 895
Banning, CA 92220
P. (951) 849-8822
E. rgallon@zennerusa.com

Jay Garbe
Wisconsin Department of Ag and Consumer Protection
4390 Beaufort Dr
Brookfield, WI 53045
P. (414) 303-1847
E. jay.garbe@wisconsin.gov

Keith Garbe
Wisconsin Department of Ag and Consumer Protection
3133 Molly Brown Ln
Green Bay, WI 54313
P. (608) 234-3343
E. keith.garbe@wisconsin.gov

Terri Garsow
Wisconsin Department of Ag and Consumer Protection
W 7076 County Road F
Shiocton, WI 54170
E. terri.garsow@wisconsin.gov

Michael Gaspers
Smithfield Farmland Corp
800 Industrial Drive
P.O. Box 490
Denison, IA 51442
P. (712) 263-7384
E. mpgaspers@smithfield.com

Ron Gibson
Seraphin Test Measure
30 Indel Avenue
Rancocas, NJ 08073
P. (609) 267-0922
E. rgibson@seraphinusa.com

Jason Glass
Kentucky Department of Agriculture
107 Corporate Drive
Frankfort, KY 40601
P. (502) 573-0282
E. jason.glass@ky.gov

Dave Gogolin
Norfolk Southern Corporation
1200 Peachtree Street NE
Bldg Box 142
Atlanta, GA 30309
P. (404) 527-2537
E. dave.gogolin@nscorp.com

Eric Golden
Cardinal Scale
203 East Daugherty
Webb City, MO 64870
P. (417) 673-4631
E. egolden@cardet.com

Jen Green
CITGO Petroleum
1293 Eldridge Parkway
Houston, TX 77077
P. (832) 486-5939
E. jgreen3@citgo.com

Frank Greene
Connecticut Dept of Consumer Protection
165 Capitol Avenue
Room 165
Hartford, CT 06106
P. (860) 713-6168
E. frank.greene@ct.gov

This publication is available free of charge from: https://doi.org/10.6028/NIST.SP.1253

Elaine Grillo
Boston ISD Weights & Measures
1010 Massachusetts Avenue
Boston, MA 02118-2606
P. (617) 635-5328
E. elaine.morash@boston.gov

Chris Guay
Procter and Gamble Co.
One Procter and Gamble Plaza
Cincinnati, OH 45202
P. (513) 983-0530
E. guay.cb@pg.com

Richard Guild
The Scale People
9693-C Gerwig Ln
Columbia, MD 21046
P. (410) 309-8550
E. richard@scalepeople.com

Brett Gurney
Utah Department of Agriculture & Food
P.O. Box 146500
350 N Redwood Rd
Salt Lake City, UT 84114-6500
P. (801) 673-5079
E. bgurney@utah.gov

Steve Hailer
Wisconsin Department of Ag and Consumer Protection
1672 N 116th St
Apt 2
Wauwatosa, WI 53226
P. (414) 416-0039
E. steven.hailer@wisconsin.gov

Ivan Hankins
Iowa Department of Agriculture/Weights and Measures
2230 S. Ankeny Blvd.
Ankeny, IA 50023
P. (515) 371-7212
E. ivan.hankins@iowaagriculture.gov

Krister Hard af Segerstad
IKEA North America Services, LLC
420 Alan Wood Road
Conshohocken, PA 19428
P. (610) 834-0180
E. krister.hardafsegerstad0@ikea.com

Brandi Harder
Rice Lake Weighing Systems
230 West Coleman St
Rice Lake, WI 54868
P. (715) 234-9171
E. bharder@ricelake.com

Steve Harrington
Oregon Department of Agric., Weights and Measures Program
635 Capitol Street NE
Salem, OR 97301
P. (503) 931-3156
E. sharrington@oda.state.or.us

Mike Harrington
Iowa Department of Agriculture/Weights and Measures
2230 S. Ankeny Blvd
Ankeny, IA 50023
P. (515) 321-0031
E. mike.harrington@iowaagriculture.gov

Rick Harshman
NIST, Office of Weights and Measures
100 Bureau Drive
MS 2600
Gaithersburg, MD 20899-2600
P. (301) 975-8107
E. richard.harshman@nist.gov

Ryanne Hartman
Michigan Department of Agriculture
940 Venture Lane
Williamston, MI 48895-2451
P. (517) 655-8202
E. hartmanr4@michigan.gov

This publication is available free of charge from: https://doi.org/10.6028/NIST.SP.1253

Jennifer Hartman King
Hartman King PC
520 Capitol Mall
Suite 750
Sacramento, CA 95814
P. (916) 379-7530
E. JHartmanKing@HartmanKingLaw.com

John Hathaway
Murray Equipment, inc.
2515 Charleston Place
Fort Wayne, IN 46808
P. (260) 480-1335
E. jhathaway@murrayequipment.com

Ron Hayes
Missouri Department of Agriculture
1616 Missouri Blvd
P.O. Box 630
Jefferson City, MO 65102
P. (573) 751-4316
E. ron.hayes@mda.mo.gov

Don Heck
Iowa Central Fuel Testing Laboratory
Four Triton Circle
Fort Dodge, IA 50501
P. (515) 574-1259
E. heck@iowacentral.edu

Scott Henry
Zebra Technologies
809 Ashland Falls Dr
Monroe, GA 30656
P. (770) 800-1187
E. scott.henry@zebra.com

Marilyn Herman
Herman and Associates
3730 Military Road NW
Washington, DC 20015
P. (202) 550-4282
E. mherman697@aol.com

Jim Hewston
J.A. King and Co
6541 C Franz Warner Parkway
Whitsett, NC 27377
P. (800) 327-7727
E. jim.hewston@jaking.com

Heath Higdon
Kentucky Department of Agriculture
107 Corporate Drive
Frankfort, KY 40601
P. (502) 573-0282
E. heath.higdon@ky.gov

Carol Hockert
Retired
3559 Lemieux Circle
Eagan, MN 55122
P. (651) 307-5223
E. chockert@verizon.net

Tony Hoffman
Wisconsin Department of Ag and Consumer Protection
3098 S Wentworth Ave
Milwaukee, WI 53207
P. (414) 316-7658
E. anthony.hoffman@wisconsin.gov

Bill Hornbach
Chevron Products Company
1696 Sun Berry Ct
Finksburg, MD 21048
P. (925) 842-3484
E. billhornbach@chevron.com

Humberto Izquierdo
Napa County Agriculture Department
1710 Soscol
Suite 3
Napa, CA 94559
P. (510) 670-5232
E. humberto.izquierdo@acgov.org

Lori Jacobson
South Dakota Weights and Measures
118 W Capitol Ave
Pierre, SD 57501
P. (605) 773-3808
E. lori.jacobson@state.sd.us

Randy Jennings
Tennessee Dept. of Ag
P.O. Box 40627
Melrose Station
Nashville, TN 37204
P. (615) 837-5327
E. randy.jennings@tn.gov

This publication is available free of charge from: https://doi.org/10.6028/NIST.SP.1253

Joanna Johnson
Johnson Policy Associates, Inc.
P.O. Box 13302
Des Moines, IA 50310
P. (515) 991-4971
E. jlj4policy@gmail.com

Mike Johnson
Nebraska: FSCP- Weights and Measures
301 Centennial Mall South
Box 94757
Lincoln, NE 68509-4757
P. (402) 471-3422
E. mike.d.johnson@nebraska.gov

Ronald Johnson
DC Government Weights & Measures Dept. of Consumer & Regulatory
1100 4th Street SW
W & M Fourth Floor
Washington, DC 20024
P. (202) 698-2136
E. Ronald.Johnson@dc.gov

Raymond Johnson Jr.
New Mexico Department of Agriculture
P.O. Box 30005
MSC 3170
Las Cruces, NM 88003-8005
P. (575) 646-1616
E. rjohnson@nmda.nmsu.edu

Rhonda Jones
Iowa Central Fuel Testing Laboratory
Four Triton Circle
Fort Dodge, IA 50501
P. (515) 574-1259
E. jones_r@iowacentral.edu

Dmitri Karimov
Liquid Controls
105 Albrecht Drive
Lake Bluff, IL 60044
P. (847) 283-8317
E. dkarimov@idexcorp.com

Michael Keilty
Endress + Hauser Flowtec AG USA
2441 Arapaho Road
Estes Park, CO 80517
P. (970) 586-2122
E. michael.keilty@us.endress.com

Brian Kernke
Musket Corporation
P.O. Box 26210
Oklahoma City, OK 73126
P. (405) 302-6552
E. brian.kernke@musketcorp.com

Rob Kieser
City of Milwaukee
841 N Broadway
3rd Floor
Milwaukee, WI 53202
P. (414) 268-6747
E. rkiese@milwaukee.gov

Stephen Kirby
General Motors
800 Glenwood Ave
Pontiac, MI 48340
P. (248) 326-4104
E. stephen.r.kirby@gm.com

Joel Kolhman
Wisconsin Department of Ag and Consumer Protection
5841 Deerfield Rd.
Racine, WI 53406
P. (262) 424-5210
E. joel.kohlman@wisconsin.gov

Jan Konijnenburg
Rice Lake Weighing Systems
230 West Coleman St
Rice Lake, wi 54868
P. (715) 736-6479
E. jkonijnenburg@ricelake.com

Tom Konst
Carroll County Auditor
119 S Lisbon St
Suite 203
Carrollton, OH 44615
P. (330) 627-2096
E. tfkonst@hotmail.com

This publication is available free of charge from: https://doi.org/10.6028/NIST.SP.1253

David Kretschmann
American Lumber Standard Committee, Inc.
7470 New Technology Way
Frederick, MD 21703
P. (240) 472-9747
E. dkretschmann@alsc.org

Jay Labecki
City of Milwaukee
841 N. Broadway
Room 304
Milwaukee, WI 53202
P. (414) 286-6013
E. jlabec@milwaukee.gov

Amy Lazas
Ikea North America Services LLC
420 Alan Wood Road
Conshoocken, PA 19428
P. (610) 834-0180
E. amy.lazas@ikea.com

Nathan Leake
Texas Department of Agriculture
1700 N. Congress Ave
11th Floor
Austin, TX 78701
P. (512) 936-2638
E. Nathan.Leake@TexasAgriculture.gov

Cindy Lease
City of Madison Department of Planning & Development
4602 Sycamore Avenue
Inspection Unit W&M
Madison, WI 53704
P. (608) 246-4514
E. clease@cityofmadison.com

Chris LeCompte
Michigan Department of Agriculture
940 Venture Lane
Williamston, MI 48895-2451
P. (517)655-8202
E. lecomptec@michigan.gov

G. Diane Lee
NIST, Office of Weights and Measures
100 Bureau Drive, MS 2600
MS 2600
Gaithersburg, MD 20707-2600
P. (301) 975-4405
E. diane.lee@nist.gov

Jeff Leiter
Bassman, Mitchell, Alfano & Leiter Chtd.
1707 L St NW
Suite 560
Washington, DC 20036
P. (202) 466-6502
E. jleiter@bmalaw.net

Troy LeValley
Compass Instruments
1020 Airpark Dr
Sugar Grove, IL 60554
P. (630) 715-6712
E. tlevalley@compass-instruments.com

Russ Lewis
Marathon Petroleum Company
11631 US Route 23
Catlettsburg, KY 41129
P. (606) 547-6994
E. rplewis@marathonpetroleum.com

Paul Lewis, Sr.
Retired
1231 Century Dr.
Clover, SC 29710
P. (818) 849-0973
E. pmlewis_76@yahoo.com

Justin Lien
Wisconsin Department of Ag and Consumer Protection
3601 Galleon Run
Madison, Wi 53718
P. (608) 224-4913
E. justin.lien@wisconsin.gov

Tim Lloyd
Montana Weights and Measures Bureau
P.O. Box 200516
Helena, MT 59620-0516
P. (406) 841-2053
E. tlloyd@mt.gov

This publication is available free of charge from: https://doi.org/10.6028/NIST.SP.1253

Cedric Lloyd
Georgia Department of Agriculture
19 Martin Luther King Dr SW
Atlanta, GA 30334
P. (404) 656-3605
E. cedric.lloyd@agr.georgia.gov

Gregory Loreck
Wisconsin Department of Ag and Consumer Protection
8565 S Whitney Dr
Oak Creek, WI 53154
P. (608) 886-0398
E. gregory.loreck@wisconsin.gov

Mark Lovisa
Louisiana Dept. of Agriculture and Forestry
5825 Florida Blvd, Suite 5000
Baton Rouge, La 70806
P. (225) 925-3780
E. mlovisa@ldaf.state.la.us

Ed Luthy
Schenck Process, LLC
108 Wade Drive
Dover, OH 44622
P. (440) 241-0194
E. eluthy@gmail.com

Joel Maddux
Virginia Department of Agriculture and Consumer Services- W&M
102 Governor St
Richmond, VA 23218
P. (804) 786-2476
E. joel.maddux@vdacs.virginia.gov

Matthew Maiten
Santa Barbara CountyAgriculture Commissions
263 Camino del Remedio
Santa Barbara, CA 93110
P. (805) 681-5600
E. mmaiten@agcommissioner.com

Nick Marck
Utilcell
206 S. Matanzas Ave
Tampa, FL 33609
P. (813) 777-7449
E. nmarck@utilcellus.com

Lisa Mathes
Kaytee Products, Inc
521 Clay Street
Chilton, WI 53014
P. (920) 849-1864
E. lmathes@central.com

Cadence Matijevich
Nevada Division of Measurement Standards
2150 Frazer Ave
Sparks, NV 89431
P. (775) 353-3726
E. c.matijevich@agri.nv.gov

Thomas Maynard
Columbus Weights & Measures
4252 Groves Road
Columbus, OH 43232
P. (614) 645-7397
E. TBMaynard@columbus.gov

Stephanie McArdle
Orange Photonics
176 Newport Rd
New London, NH 03257
P. (603) 573-9212
E. smcardle@orangephotonics.com

Rich McCann
Wisconsin Department of Ag and Consumer Protection
N 800 County Road A
Briggsville, WI 53920
P. (608) 469-2901
E. richard.mccann@wisconsin.gov

Kevin McCarthy
Wisconsin Department of Ag and Consumer Protection
3733 Design Pass
Madison, WI 53719
P. (608) 487-3675
E. kevin.mccarthy@wisconsin.gov

Greg McDermitt
Roadrunner Freight
1727 Clover Dr
Lebanon, TN 37087
P. (615) 428-6693
E. gmcdermitt@rrts.com

This publication is available free of charge from: https://doi.org/10.6028/NIST.SP.1253

John McGuire
New Jersey Weights & Measures
1261 Routes 1 & 9 South
Avenel, NJ 07001
P. (732) 815-7816
E. mcguirej@dca.lps.state.nj.us

Tahis McQueen
Washington State Department of Agriculture
14546 Madrona Rd SW
Port Orchard, wa 98367
P. (360) 481-7452
E. tmcqueen@agr.wa.gov

Mauricio Mejia
Florida Department of Agriculture and Consurmer Services
640 Yorkshire Ct Apt B
Safety Harbor, FL 34695
P. (850) 274-9843
E. Mauricio.Mejia@freshfromflorida.com

Beverly Michels
BP
150 West Warrenville Rd
MC J-7
Naperville, IL 60563
P. (717) 909-8923
E. beverly.michels@bp.com

Shelly Miller
Wisconsin Department of Ag and Consumer Protection
PO Box 8911
2811 Agriculture Dr
Madison, WI 53718
P. (608) 516-5362
E. rachelle.miller@wisconsin.gov

Loren Minnich
Kansas Department of Agriculture
1320 Research Park Dr
Manhattan, KS 66502
P. (785) 209-2780
E. loren.minnich@ks.gov

Kristy Moore
Growth Energy
3384 Country Meadow Lane
Heyworth, IL 61745
P. (309) 275-9433
E. fueltechservice@gmail.com

Joe Moreo
Trinity Ag Commissioner
173 Tom Bell Rd.
Weaverville, CA 96093
E. jomoreo@trinitycounty.org

Stuart Mueller
Thermofisher Scientific
501 90th Avenue Northwest
Minneapolis, mn 55433
P. (763) 783-2599
E. stuart.mueller@Thermofisher.com

Bob Murnane
Seraphin Test Measure, Co.
30 Indel Avenue
PO Box 227
Rancocas, NJ 08073-0227
P. (609) 267-0922
E. rmurnane@pemfab.com

Doug Musick
Kansas Department of Agriculture
1320 Research Park Drive
Manhattan, KS 66502
P. (785) 564-6681
E. Doug.Musick@KS.Gov

Angel Nazario
Boston ISD Weights & Measures
1010 Massachusetts Ave.
Boston, MA 02128
P. (617) 961-3319
E. angel.nazario@boston.gov

Josh Nelson
Oregon Department of Agric., Weights and Measures Program
635 Capitol Street NE
Salem, OR 97301-2532
P. (503) 986-4751
E. jnelson@oda.state.or.us

This publication is available free of charge from: https://doi.org/10.6028/NIST.SP.1253

Stefanie Nelson
Wisconsin Department of Ag and Consumer Protection
5251 McDermid Dr
Oconto Falls, WI 54154
P. (715) 701-0126
E. stefanie.nelson@wisconsin.gov

Darrell Nolan
Anton Paar
10215 Timber Ridge Road
Ashland, VA 23005
P. (804) 550-1051
E. lillianne.hall@anton-paar.com

Neal Nover
WinWam Software
3000 Atrium Way
Suite 2203
Mount Laurel, NJ 08054-3910
P. (856) 273-6988
E. NealNov@winwam.com

Erin O'Brien
Wisconsin Department of Ag and Consumer Protection
W465 Little Prairie Rd
Palmyra, WI 53156
P. (920) 397-2273
E. erin.obrien@wisconsin.gov

Doug Olson
NIST, Office of Weights and Measures
100 Bureau Dr
MS 2600
Gaithersburg, MD 20899
P. (301) 975-2956
E. douglas.olson@nist.gov

Don Onwiler
National Conference on Weights and Measures, Inc
1135 M St
Suite 110
Lincoln, NE 68508
P. (402) 434-4871
E. don.onwiler@ncwm.net

Christina Osborn
Texas Department of Agriculture
1700 N Congress Ave
Austin, TX 78701
P. (512) 936-3232
E. christina.osborn@texasagriculture.gov

Mike Otzelberger
City of Milwaukee
841 N Broadway
Milwaukee, WI 53202
P. (414) 286-8628
E. motzel@milwaukee.gov

Nick Owens
Stark County Weights and Measures
110 Central Plaza S
Suite 220
Canton, OH 44702
P. (330) 451-2377
E. njowens@starkcountyohio.gov

Tamara Paik
Marathon Petroleum Company
539 South Main Street
Findlay, OH 45840
P. (419) 421-4171
E. tkpaik@marathonpetroleum.com

Marc Paquette
Vermont Agency of Agriculture Food & Markets
116 State Street, Drawer 20
Montpelier, VT 05620-2901
P. (802) 828-2436
E. marc.paquette@vermont.gov

Chad Parker
North Carolina Department of Agriculture
1050 msc
Raleigh, NC 27699-1050
P. (919) 707-3225
E. chad.parker@ncagr.gov

Jo Lynne Parsons
Center for Quality Assurance
4800 James Savage Road
Midland, MI 48642
P. (989) 615-0122
E. jparsons@centerforqa.com

This publication is available free of charge from: https://doi.org/10.6028/NIST.SP.1253

Keith Penn
Colonial Pipeline Company
5019 Dripping Spring Ave
Baytown, TX 77523
P. (713) 703-5339
E. kpenn@colpipe.com

Michael Pereira
Pago Pago American Samoa
E. c_c_pereira@yahoo.com

Kandy Perez
City of Milwaukee
841 N Broadway St
Milwaukee, WI 53202
P. (414) 708-2836
E. kperez@milwaukee.gov

Steve Peter
Wisconsin Department of Ag and Consumer Protection
2811 Agriculture Dr.
Madison, WI 53718
P. (608) 224-4954
E. stephen.peter@wisconsin.gov

Robert Peterson
Cucacao: Ministry of Economic Development
Plettergweg 43
Willemstad,
E. robert.peterson@gobiernu.cw

Jim Pettinato
TechnipFMC
1602 Wagner Avenue
Erie, PA 16510
P. (814) 898-5250
E. james.pettinato@technipfmc.com

Cathy Pinkerton-Roache
Alameda Co Dept. of Weights and Measures
224 W Winton Ave #184
Hayward, CA 94544
P. (510) 670-6689
E. cathy.roache@acgov.org

Brent Price
Gilbarco Inc
7300 W. Friendly Ave
Greensboro, NC 27410
P. (336) 337-1695
E. brent.price@gilbarco.com

Hal Prince
Florida Department of Agriculture and Consumer Services
2360 Lakeview Ave.
Clermont, FL 34711
P. (850) 921-1570
E. harold.prince@freshfromflorida.com

Ken Ramsburg
Maryland Department of Agriculture
50 Harry S. Truman Parkway
Annapolis, MD 21401
P. (410) 841-5790
E. kenneth.ramsburg@maryland.gov

Doug Rathbun
Illinois Department of Agriculture
801 Sangamon Avenue
P.O. Box 19281
Springfield, IL 62794-9281
P. (217) 785-8300
E. doug.rathbun@illinois.gov

Tyler Reeder
National Conference on Weights and Measures, Inc.
1135 M St
Suite 110
Lincoln, Ne 68508
P. (402) 434-4880
E. tyler.reeder@ncwm.net

Walt Remmert
Pennsylvania Department of Agriculture Bureau of W & M
2301 North Cameron Street
Harrisburg, PA 17110
P. (717) 787-9089
E. wremmert@pa.gov

This publication is available free of charge from: https://doi.org/10.6028/NIST.SP.1253

Rebecca Richardson
M4 Consulting
2005 Tin Cup Road
Mahomet, IL 61853
P. (217) 419-3543
E. RRichardson@marciv.com

Lance Robertson
Measurement Canada
151 Tunney's Pasture Driveway
Ottawa, ON K1A 0C9
P. (613) 952-0661
E. lance.robertson@canada.ca

Gene Robertson
Mississippi Department of Agriculture and Commerce
P.O. Box 1609
Jackson, MS 39215-1609
P. (601) 359-1102
E. gene@mdac.ms.gov

Jim Rocco
PMAA
360 Heritage Road
Aurora, OH 44202
P. (216) 577-1400
E. jrocco@sagerisk.com

Tom Roling
Smithfield Pet
1485 E. 61st Ave
Denver, CO 80216
P. (720) 644-2417
E. troling@smithfield.com

Roberto Ruiz
Texas Department of Agriculture
1700 N. Congress Avenue
Austin, TX 78711
P. (210) 820-0288
E. roberto.ruiz@texasagriculture.gov

Charlie Rutherford
CPR Squared, Inc.
10237 Yellow Circle Drive
Minnetonka, MN 55343
P. (612) 655-5494
E. charlie@cprsquaredinc.com

Richard Scali
Town of Barnstable
200 Main Street
Hyannis, MA 02601
P. (508) 862-4778
E. richard.scali@town.barnstable.ma.us

Jason Schmidt
Association of American Feed Control Officials
102 Ag Chemistry Bldg
Baton Rouge, LA 70803
P. (225) 342-5812
E. jasonschmidt@ldaf.state.la.us

Kevin Schnepp
California Division of Measurement Standards
6790 Florin Perkins Road
Suite 100
Sacramento, CA 95828
P. (916) 229-3458
E. kevin.schnepp@cdfa.ca.gov

Bryan Seals
Texas Department of Agriculture
1700 N. Congress Avenue
Austin, TX 78711
P. (210)820-0288
E. bryan.seals@texasagriculture.gov

Prentiss Searles
American Petroleum Institute
1220 L Street NW
Washington, DC 20005
P. (202) 682-8227
E. searlesp@api.org

David Sefcik
NIST, Office of Weights and Measures
100 Bureau Drive
MS 2600
Gaithersburg, MD 20899-2600
P. (301) 975-4868
E. david.sefcik@nist.gov

Brenda Sharkey
South Dakota Weights and Measures
118 W Capitol Ave
Pierre, SD 57501
E. brenda.sharkey@state.sd.us

This publication is available free of charge from: https://doi.org/10.6028/NIST.SP.1253

Matt Sheehan
Chevron U.S.A. Inc.
100 Chevron Way
Richmond, CA 94801
P. (510) 242-2829
E. msheehan@chevron.com

Dick Shipman
Rice Lake Weighing Systems
230 West Coleman Street
Rice Lake, WI 45868
P. (715) 234-9171
E. rshipman@ricelake.com

Jo-Jo Silvestro
Gloucester Co. New Jersey
64 Forage Drive
Mickleton, NJ 08056
P. (856) 423-5360
E. silver7777@comcast.net

Scott Simmons
Colorado Div. of Oil and Public Safety
633 17th Street
Suite 500
Denver, CO 80202
P. (303) 378-1103
E. scott.simmons@state.co.us

Kate Smetana
Colorado Department of Agriculture
300 S. Technology Ct.
Broomfield, CO 80021
P. (303) 869-9241
E. kate.smetana@state.co.us

Mike Smith
New York Dept. of Agriculture & Markets
3 Dogwood Lane
Scottsville, NY 14546
P. (716)572-1741
E. michael.smith@agriculture.ny.gov

Bryan Snodgrass
West Virginia Weights & Measures Division of Labor
570 MacCorkle Ave W
St. Albans, WV 25177
P. (304) 722-0602
E. bryan.k.snodgrass@wv.com

Joe Sorena
Chevron Products Company
1500 Louisiana
Houston, TX 77002
P. (832) 854-4840
E. jsorena@chevron.com

Robert Stamp
Compass Instruments
1020 Airpark Drive
Sugar Grove, IL 60554
P. (630) 556-4835
E. rgstamp@compass-instruments.com

Lou Straub
Fairbanks Scales, Inc.
104 Gunnery Court E
Ninety Six, SC 29666
P. (864) 543-2353
E. lstraub@fairbanks.com

Bill Striejewske
Nevada Division of Measurement Standards
2150 Frazer Ave
Sparks, NV 89431
P. (775) 353-3792
E. wstriejewske@agri.nv.gov

Elisa Stritt
National Conference on Weights and Measures, Inc
1135 M St
Suite 110
Lincoln, NE 68508
P. (402) 434-4872
E. elisa.stritt@ncwm.net

Stuart Strnad
Texas Department of Agriculture
1700 N Congress Avenue
Austin, TX 78701
P. (512) 463-5706
E. stuart.strnad@texasagriculture.gov

Charlie Stutesman
Kansas Department of Agriculture
1320 Research Park Dr
Manhattan, KS 66502
P. (785) 564-6681
E. charles.stutesman@ks.gov

This publication is available free of charge from: https://doi.org/10.6028/NIST.SP.1253

Dick Suiter
Richard Suiter Consulting
9819 Anchor Bend
McCordsville, IN 46055
P. (317) 336-9819
E. Rsuiter700@aol.com

Lara Sutherlin
Wisconsin Dept of Agriculture, Trade and Consumer
2811 Agriculture Dr
PO Box 8911
Madison, WI 53708
P. (608) 224-4929
E. lara.sutherlin@wisconsin.gov

Chris Tourdot
City of Madison
4602 Sycamore Ave
Madison, WI 53704
P. (608) 246-4515
E. ctourdot@cityofmadison.com

Patrick Tovey
Pet Food Institute
1020 19th Street
Suite 225
Washington, DC 20036
P. (202) 791-9400
E. pat@petfoodinstitute.org

Stan Toy
Santa Clara County Weights and Measures
1553 Berger Dr
Building 1, 2nd Floor
San Jose, CA 95112
P. (408) 918-4633
E. stan.toy@cep.sccgov.org

Carmen Trevizo
TTCI
P.O. Box 11130
555 DOT Road
Pueblo, CO 81001
P. (719) 574-0560
E. carmen_trevizo@aar.com

Steve Trueman
Brechbuhler Scales, Inc.
9930 Crescent Park Drive
West Chester, OH 45069
P. (513) 777-5800
E. strueman@bscales.com

David Turning
New Mexico Department of Agriculture
P.O. Box 30005
MSC 3170
Las Cruces, NM 88003-8005
P. (575) 646-1616
E. dturning@nmda.nmsu.edu

Mitch Tuss
XPO-LTL
2211 Old Earhart Rd Suite 100
Ann Arbor, MI 48105
P. (734) 730-5024
E. mitchell.tuss@xpo.com

Rob Upright
VPG Transducers
42 Countryside Road
North Grafton, MA 01536
P. (508) 615-1185
E. Rob.Upright@VPGSensors.com

Kevin Upschulte
Missouri Department of Agriculture
1620 Missouri Blvd
P.O. Box 630
Jefferson City, mo 65109
P. (573) 751-2922
E. kevin.upschulte@mda.mo.gov

Marie Valentine
Toyota Motor North America
1555 Woodridge
PRA-E1-AA
Ann Arbor, MI 48105
P. (734) 995-3692
E. marie.valentine@toyota.com

Craig VanBuren
Michigan Department of Agriculture
940 Venture Lane
Williamston, MI 48895-2451
P. (517) 655-8202
E. vanburenc9@michigan.gov

This publication is available free of charge from: https://doi.org/10.6028/NIST.SP.1253

Greg Vander Plaats
Minnesota Department of Weights and Measures
14305 South Cross Dr
Suite 150
Burnsville, MN 55306
P. (651) 539-1559
E. greg.vanderplaats@state.mn.us

Claudia Verdugo
San Diego County Department of Agriculture, Weights and Measures
9325 Hazard Way
Suite 100
San Diego, CA 92123-1217
P. (858) 614-7725
E. claudia.verdugo@sdcounty.ca.gov

Russ Vires
Mettler-Toledo, LLC
1150 Dearborn Drive
Worthington, OH 43085
P. (614) 314-3765
E. russ.vires@mt.com

Alan Walker
Florida Department of Agriculture and Consumer Services
6260 Buckingham Road
Fort Myers, FL 33905
P. (850) 274-9044
E. alan.walker@freshfromflorida.com

Jack Walsh
Town of Ashland
525 Washington St.
Town Hall
Wellesley, MA 02482
P. (774) 279-2559
E. JackBWalsh@verizon.net

Jerry Wang
A&D Engineering, Inc.
1756 Automation Parkway
San Jose, CA 95131
P. (408) 518-5113
E. jwang@andonline.com

Lisa Warfield
NIST, Office of Weights and Measures
100 Bureau Drive
MS 2600
Gaithersburg, MD 20899-2600
P. (301) 975-3308
E. lisa.warfield@nist.gov

Tim White
Michigan Department of Agriculture
940 Venture Lane
Williamston, MI 48895-2451
P. (517) 655-8202
E. whitet@michigan.gov

Dylan Wilks
Orange Photonics, inc.
464 Elkins Rd
Elkins, NH 03233
P. (603) 812-8418
E. dwilks@orangephotonics.com

Bobbie Willhite
San Bernardino County Ag/Weights & Measures
Dept. of Ag/Weights & Measures
777 East Rialto Avenue
San Bernardino, CA 92346
P. (909)387-2117
E. rwillhite@awm.sbcounty.gov

Jim Willis
New York Dept. of Agriculture & Markets
26 Bender Lane
Delmar, NY 12054
P. (518) 485-8377
E. james.willis@agriculture.ny.gov

Michelle Wilson
Arizona Department of Ag: Weights and Measures
1688 W. Adams St.
Suite 134
Phoenix, AZ 85007-2606
P. (602) 771-4933
E. mwilson@azda.gov

Nathan Wilson
Texas Department of Agriculture
1700 N. Congress Avenue
Austin, TX 78701
P. (806) 559-7694
E. nathan.wilson@texasagriculture.gov

This publication is available free of charge from: https://doi.org/10.6028/NIST.SP.1253

Vince Wolpert
Arizona Department of Ag: Weights and Measures
1688 W. Adams St.
Phoenix, AZ 85007
P. (602) 920-4236
E. vwolpert@azda.gov

Glenn Wood
City of Madison Department of Planning & Development
4602 Sycamore Ave
Madison, WI 53704
P. (608) 243-0585
E. gwood@cityofmadison.com

Phil Wright
Texas Department of Agriculture
1700 N. Congress Avenue
Austin, TX 78711
P. (512) 463-6514
E. philip.wright@texasagriculture.gov

Heng Yong Tan
Canadian Grain Commission
333 Seymour Street
Room 300
Vancouver, BC V6B 5A6
P. (604) 666-0069
E. hengyong.tan@grainscanada.gc.ca

Scott Zaremba
ZARCO USA INC
1548 E 23rd St
Suite C
Lawrence, KS 66046-5117
P. (785) 843-6086
E. scott@zarcousa.com

Jane Zulkiewicz
Town of Barnstable
200 Main Street
Hyannis, MA 02601
P. (505) 862-4773
E. jane.zulkiewicz@town.barnstable.ma.us

Steve Zylkowski
APA- The Engineered Wood Association
7011 South 19th Street
Tacoma, wa 98466
P. (253) 620-7420
E. steve.zylkowski@apawood.org