E. Wenk Jr

NATIONAL BUREAU OF STANDARDS REPORT

1152

Stress Studies of Bulkhead Intersections for Welded Tankers

By

William R. Campbell, L. K. Irwin and R. C. Duncan

NBS

U. S. DEPARTMENT OF COMMERCE
NATIONAL BUREAU OF STANDARDS

U. S. DEPARTMENT OF COMMERCE
Charles Sawyer, Secretary

NATIONAL BUREAU OF STANDARDS
E. U. Condon, Director

THE NATIONAL BUREAU OF STANDARDS

The scope of activities of the National Bureau of Standards is suggested in the following listing of the divisions and sections engaged in technical work. In general, each section is engaged in specialized research, development, and engineering in the field indicated by its title. A brief description of the activities, and of the resultant reports and publications, appears on the inside of the back cover of this report.

1. **ELECTRICITY.** Resistance Measurements. Inductance and Capacitance. Electrical Instruments. Magnetic Measurements. Electrochemistry.
2. **OPTICS AND METROLOGY.** Photometry and Colorimetry. Optical Instruments. Photographic Technology. Length. Gage.
3. **HEAT AND POWER.** Temperature Measurements. Thermodynamics. Cryogenics. Engines and Lubrication. Engine Fuels. Combustion.
4. **ATOMIC AND RADIATION PHYSICS.** Spectroscopy. Radiometry. Mass Spectrometry. Physical Electronics. Electron Physics. Atomic Physics. Neutron Measurements. Nuclear Physics. Radioactivity. X-Rays. Betatron. Nucleonic Instrumentation. Radiological Equipment. Atomic Energy Commission Instruments Branch.
5. **CHEMISTRY.** Organic Coatings. Surface Chemistry. Organic Chemistry. Analytical Chemistry. Inorganic Chemistry. Electrodeposition. Gas Chemistry. Physical Chemistry. Thermochemistry. Spectrochemistry. Pure Substances.
6. **MECHANICS.** Sound. Mechanical Instruments. Aerodynamics. Engineering Mechanics. Hydraulics. Mass. Capacity, Density, and Fluid Meters.
7. **ORGANIC AND FIBROUS MATERIALS.** Rubber. Textiles. Paper. Leather. Testing and Specifications. Organic Plastics. Dental Research.
8. **METALLURGY.** Thermal Metallurgy. Chemical Metallurgy. Mechanical Metallurgy. Corrosion.
9. **MINERAL PRODUCTS.** Porcelain and Pottery. Glass. Refractories. Enameled Metals. Building Stone. Concreting Materials. Constitution and Microstructure. Chemistry of Mineral Products.
10. **BUILDING TECHNOLOGY.** Structural Engineering. Fire Protection. Heating and Air Conditioning. Exterior and Interior Coverings. Codes and Specifications.
11. **APPLIED MATHEMATICS.** Numerical Analysis. Computation. Statistical Engineering. Machine Development.
12. **ELECTRONICS.** Engineering Electronics. Electron Tubes. Electronic Computers.
13. **ORDNANCE DEVELOPMENT.** Mechanical Research and Development. Electromechanical Fuzes. Technical Services. Missile Fuzing Research. Missile Fuzing Development. Projectile Fuzes. Ordnance Components. Ordnance Tests. Ordnance Research.
14. **RADIO PROPAGATION.** Upper Atmosphere Research. Ionospheric Research. Regular Propagation Services. Frequency Utilization Research. Tropospheric Propagation Research. High Frequency Standards. Microwave Standards.
15. **MISSILE DEVELOPMENT.** Missile Engineering. Missile Dynamics. Missile Intelligence. Missile Instrumentation. Technical Services.

NBS PROJECT 0604-22-3516

September 1951

NBS REPORT 1152

Stress Studies of Bulkhead Intersections for Welded Tankers*

by

William R. Campbell, L. K. Irwin and R. C. Duncan
Engineering Mechanics Section
Mechanics Division

NBS

* Presented at the 32nd Annual Meeting of the American Welding Society, October 14-19, 1951.

Stress Studies of Bulkhead Intersections for Welded Tankers

By Wm. R. Campbell, L. K. Irwin and R. C. Duncan

ABSTRACT

Four large bulkhead intersection specimens were tested in tension in the Engineering Mechanics Section of the National Bureau of Standards for the Ship Structure Committee. The tests are part of a study of the typical structural discontinuities in ships to determine the magnitude of stress concentrations and areas affected by discontinuities, and to furnish data necessary for improving current designs. Each specimen represents the intersection of a longitudinal bulkhead and a transverse bulkhead as found in welded tanker design. The elastic stress distribution at room temperature, strain distribution prior to failure at 0°F, and energy for failure at 0°F are presented. Stress values in the region of the intersection are compared with stresses in the longitudinal bulkhead bordering the intersection. Stress concentrations and energy at failure for the different specimens are also compared.

INTRODUCTION

The present paper is the second of a series reporting the results of ship structure tests performed at the National Bureau of Standards as part of a general study of structural discontinuities sponsored by the Ship Structure Committee. A program for the study of interrupted longitudinals and bulkhead intersections for welded tankers was developed by

---

Wm. R. Campbell, L. K. Irwin and R. C. Duncan are associated with the National Bureau of Standards, Washington, D. C.

Presented at the Thirty-Second Annual Meeting A.W.S., Detroit, Michigan, week of October 14, 1951.

Work described in this paper was sponsored by the Bureau of Ships, Department of the Navy, for the Ship Structure Committee. Opinions expressed are those of the authors.

a Project Advisory Committee with representatives from the member agencies of the Ship Structure Committee. The purpose of the test program is to determine the magnitude of stress concentrations and areas affected by discontinuities, and to furnish data for improving current designs.

The results of tensile tests on four interrupted bottom longitudinals have been previously reported (1). The present paper is concerned with tensile tests of four bulkhead intersection specimens. Elastic tests at room temperature and tests to failure at 0°F were made on each specimen. The elastic stress distributions were determined by loading the specimen and measuring the strains on sufficient gage lines to determine the state of strain from which the state of stress could be determined. Tests to failure on each specimen were conducted at 0°F in an effort to duplicate the brittle fractures which have been characteristic of many welded ship failures. From these tests, strain distribution and energy to failure determinations were made.

SPECIMENS

The corrugated plate bulkhead intersection specimens represented full-sized sections at the connection of the longitudinal bulkhead and the transverse bulkhead. Isometric representations of the four specimens, numbered 5 to 8, are shown in figure 1. The specimens were fabricated from steel ship plates joined by welding. Specimen 5 represented the basic structure, modifications of which were used in fabricating specimens 6, 7, and 8. Full penetration welds at the longitudinal bulkhead connection on specimen 6 replaced the fillet welds used on specimen 5. At the longitudinal bulkhead connection and in line with the tee web, brackets were introduced on both sides of the sloping corrugated section on specimen 7. Specimen 8 was obtained by adding a formed angle at the longitudinal bulkhead connection.

The tensile properties of the ship plate, table 1, were determined on samples taken from the plate stock before fabrication of the specimens.

TESTING PROCEDURE

The bulkhead intersection specimens were loaded in a horizontal Emery testing machine having a capacity in tension of 1,150,000 lb. Each specimen was placed in the testing machine with the longitudinal bulkhead horizontal. Specimen No. 5 was the first specimen tested, and the loads for this specimen were applied through two U-bolts at each end of the specimen. The legs of the U-bolts projected through four holes in plates welded to each end of the specimen. The throats of the U-bolts encircled the legs of a T-shaped fixture, the stem of which was gripped in the head of the testing machine. Following the test of specimen 5, two of the U-bolts failed during the course of other tests, and U-bolt arrangement was subsequently discarded in favor of pin loading. The loads for specimens 6, 7 and 8 were applied through reinforced welded plate headers which were connected by pins and straps to eyebars gripped in each head of the testing machine. Specimen 6 is shown in the testing machine in figure 2.

ELASTIC TESTS AT ROOM TEMPERATURE

SR-4 single element resistance strain gages, type A-3, and three element rosettes, type AR-2, were installed on each specimen, the locations of those gages for specimen 8 being shown in figure 3. Each gage symbol in figure 3 represents two gages, one on each side of the specimen in similar locations, except for the edge gages. Gages were air dried for 16 hours, heated with infrared lamps for 3 hours, and waterproofed with a mixture of equal parts U.S.P. petrolatum and petrosene wax. Specimen 6 is shown in figure 4 with gages and wiring attached. Strain readings were taken on all gages at loads of 20, 60, 100, 140 and 160 kips using SR-4 portable strain indicators.

TESTS TO FAILURE AT 0°F

Following the test at room temperature, an open top box of insulating board was built around each specimen for

the test at 0°F. Solid carbon dioxide was used as a coolant, and ten copper-constantan thermocouples were installed on each specimen, as shown in figure 3, for temperature determinations. Two overall dial extensometers were attached to the headers for determining the centerline extension of the specimen. The welds between the specimen and the end tabs were heated with infrared lamps during the test to reduce the possibility of failure of the end connections at low temperature. The low temperature test set-up for specimen 7 is shown in figure 5 with the near side of the box removed.

With the temperature of the specimen near 0°F, strain readings were taken on all gage elements parallel to the axis of the specimen at load increments of 50 kips up to a load of 200 kips and thereafter at increments of 100 kips until failure was imminent, or until a number of important gages become inoperative. The dial extensometers were read up to the instant of failure.

Specimen 5, loaded with the U-bolt type fixtures, was not tested to complete failure. The test was stopped when one of the smaller vertical brackets fractured.

STRESS DISTRIBUTION AT ROOM TEMPERATURE

The strains for corresponding gage lines on opposite sides of plates were averaged for each load. The load-average strain relationships were reasonably well represented by straight lines. Stresses due to a 160 kip load were computed from the linear load-strain relationships by standard methods (2, 3). The magnitude and direction of the principal stresses at each rosette were computed using the average values of Young's modulus and Poisson's ratio given for the material in table 1. Axial stresses for determining the stress distribution on sections B-B and C-C of each specimen, figure 3, were computed from the principal strains for a load of 160 kips. Section B-B was in line with the intersection of the sloping sides of the longitudinal bulkhead and the tee web. The ratios of the axial stresses to the average stress in the longitudinal bulkhead outside the area of the intersection were computed to give a measure of stress concentrations. The average stress in the longitudinal bulkhead (P/A) was taken as the load, 160 kips, divided by the area of the unmodified portion of the longitudinal bulkhead, section A-A.

The magnitude and direction of the principal stresses for the four specimens are shown in figures 6 to 9. Comparison of the principal stresses and their directions indicates that similar stress patterns were obtained for the different specimens. Major principal stresses fan out with diminishing magnitudes from the intersections of the sloping sides of the longitudinal bulkhead and the web of the tee. Bracket stresses converged on the web of the tee. The highest stresses were measured at the intersection of the sloping sides of the longitudinal bulkhead and the tee web and at the intersections of the longitudinal bulkhead and the brackets. The exceptionally large stresses measured on the brackets of specimen 7 are thought to be in part due to an initial misalignment of the component plates during fabrication.

The axial stress distributions on the tee web, section C-C, of specimens 6, 7 and 8 and peak stresses for specimen 5 are given in figure 10. Axial stresses on the tee web reached maximum values at the intersection of the sloping sides of the longitudinal bulkhead. Specimens 7 and 8 with the structural modifications shown in figure 1 exhibited lower axial stresses at these points. The ratio of the stresses here to the average stress in the longitudinal bulkhead ranged from 2.1 for specimen 7 to 3.4 for specimen 6.

The axial stresses at corresponding gage locations on sections B-B and B'-B' were averaged for each specimen. These average axial stresses are shown in figure 11. The stress distributions for specimen 5 and 6 were generally alike but were markedly different from the distributions for modified specimens 7 and 8. The stresses at this section were significantly lower on specimens 7 and 8 than on specimens 5 and 6. Stresses in the longitudinal bulkhead 16 to 20 inches from the face plate and in line with the intersection of the sloping side and the tee web were 1.2 to 1.7 times the average stress in the longitudinal bulkhead.

Excluding specimen 5, the average axial stresses on the tee webs and brackets were computed and multiplied by the areas of the web and brackets respectively to obtain the loads carried by these components. The loads carried by the tee webs and brackets at section C-C are given in table 2. The sum of the computed web and bracket loads differed from the testing machine load of 160 kips by 2.0 to 12.7 percent. It is probable that the computed tee web loads are more accurate than the computed bracket loads, since

the stress distribution on the tee web is more easily defined by the limited number of stress values. Accordingly, it is also probable that bracket loads obtained by taking differences between the testing machine load and the computed tee web (table 2) loads are more reliable than the computed bracket loads.

STRAIN DISTRIBUTION PRIOR TO FAILURE AT 0°F

The axial strains for gages on opposite sides of the plate in similar locations were averaged for each load. Strains at corresponding gage locations for sections B-B and B'-B' were averaged. Strain distributions for sections B-B and C-C at a load of 700 kips are shown in figures 12 and 13 for specimens 6, 7 and 8.

The strain distributions at high loads generally followed the pattern of the elastic strain distributions, except that specimen 8 showed a significant reduction in stress concentrations at high loads. Comparison of figure 12 with figure 10 shows specimens 7 and 8 to be interchanged with regard to magnitudes of stresses and strains. At points of high stress specimens 7 and 8 were strained considerably less than specimen 6.

ENERGY TO FAILURE AT 0°F

Comparisons between the energies required for failure of the different specimens are difficult to make. On all specimens, brackets fractured at loads less than the maximum load, causing discontinuities in the elongation measurements.

Curves of center line extension versus load are given in figure 14. The energy to failure for each specimen was computed as the area under the load-extension curve, the extension being measured between the upright posts shown in figure 5. The computed energies are given in table 3.

MAXIMUM LOADS

The maximum loads sustained by the four specimens are given in table 3. All the specimens failed with brittle fractures except specimen 5 for which the failure was incomplete. Specimens 6 and 7 fractured across the longitudinal bulkhead near or at the connection with the face plate of the tee. The fracture of specimen 6 occurred partially in the weld metal of one of the sloping sides. After the test an inclusion approximately three inches long was observed in the weld metal at the intersection of one sloping side and the web of the tee. Specimen 7 fractured in the parent plate except for one of the brackets in line with the tee web. This bracket fractured in the weld metal at the face plate. The fracture of specimen 8 was across the tee web in the parent plate.

Cheveron patterns on the fracture surfaces of specimens 6, 7 and 8 indicated that the fractures started at the intersection of the sloping bulkhead section and the web of the tee. Specimens 6, 7 and 8 are shown after failure in figures 15 to 17.

The average stresses (P/A) on the longitudinal bulkhead section A-A at the maximum load were computed for each specimen and are given in table 3. These stresses were below the tensile yield strength of the material (table 1) for all specimens except specimen 8.

The efficiencies of the four specimens were computed for several values of load. The efficiency, e, was taken as the ratio

$$e = \frac{\sigma_a}{\sigma_c} 100 \qquad (1)$$

where σ_a is the average stress (P/A) on section A-A through the longitudinal bulkhead at load P, and σ_c is the stress required to strain an axially loaded bar of the same material and area to the average overall strain recorded for the specimen at the load P. Efficiency versus load curves for the

four specimens are shown in figure 18. Figure 18 indicates that all modifications of the basic structure, specimen 5, increased the efficiency of the structure for elastic loading. It is interesting to note that the greatest increase in axial rigidity for low loads was affected by the substitution of full penetration welds for double-fillet welds on the longitudinal bulkhead on specimen 6. The change in welds had no beneficial effect on stress concentrations, however.

SUMMARY

The elastic stress distribution at room temperature, strain distribution prior to failure at 0°F, and energy to failure at 0°F were determined for four bulkhead intersection specimens, and the maximum loads were measured. Stresses in the axial direction ranging from 2.1 to 3.4 times the average stress in the longitudinal bulkhead were measured at the intersection of the tee web and the sloping sides of the longitudinal bulkhead. The strain distributions for high loads did not differ appreciably from the elastic strain distributions. The four specimens sustained considerable elongation before failure, but all specimens ultimately developed brittle fractures in the area of the intersection.

Based on the energy for failure, maximum load, and reduction of stress concentrations at high loads, specimen 8, for which the basic structure was modified by the addition of angles at the bulkhead connection, showed the most promising performance of the four designs studied. Based on reduction of stress concentrations under elastic conditions, specimen 7 showed the best performance.

ACKNOWLEDGMENTS

Acknowledgment is made to the Ship Structure Committee and the Bureau of Ships without whose program of research and financial assistance these tests would not have been undertaken. During the course of these tests many valuable suggestions were received from the Project Advisory Committee, consisting of Cmdr. James McIntosh USCG, chairman, Mr. E. M. MacCutcheon Jr., Mr. W. G. Frederick, Mr. John Vasta, and Mr. Mathew J. Letich, and from Dr. Finn Jonassen, technical advisor to the Ship Structure Committee.

REFERENCES

1. Campbell, Wm. R., "Stress Studies of Welded Ship Structure Specimens", The Welding Journal, Vol. 30, No. 2, (68s-76s), 1951.

2. Baumberger, R. and Hines, F., Practical Reduction Formulas for Use on Bonded Wire Strain Gages in Two-Dimensional Stress Fields, Experimental Stress Analysis, Vol. II., No. 1, 1944.

3. Timoshenko, S., Strength of Materials, D. Van Nostrand Co., Part I. June, 1940, pp 44-52.

Table 1. Mechanical properties of ship plate at room temperature

Sample	A	B	C	D	Avg.
Thickness, in.	0.500	0.500	0.500	0.500	0.500
Young's modulus, psi x 10^{-3}	30,100	29,900	30,500	30,100	30,100
Poisson's ratio	0.287	0.289	0.293	0.292	0.290
Proportional limit*, psi x 10^{-3}	30.7	34.2	30.9	30.1	31.5
Yield point, psi x 10^{-3}	33.7	35.6	36.8	36.8	35.7
Tensile strength, psi x 10^{-3}	61.8	62.0	62.0	61.8	61.9
Elongation in 8 in., percent	32.0	30.4	32.0	31.9	31.6

* 30 x 10^{-6} offset.

Table 2. Measurements and results of elastic tests.

Specimen No.	5	6	7	8
Testing machine load, P, lb x 10^{-3}	160	160	160	160
Section A-A				
Area of section, in.^{2}	33.60	32.88	34.81	33.23
Average stress*, psi x 10^{-3}	4.8	4.9	4.6	4.8
Maximum stress 16 inches from face plate, psi x 10^{-3}	6.4	7.2	8.5**	6.2
Section C-C				
Area of section, in.^{2}	---	40.49	41.05	40.82
Area of tee web, in.^{2}	---	32.7	33.3	32.9
Maximum tee web stress, psi x 10^{-3}	14.9	16.6	9.9	13.9
Average tee web stress, psi x 10^{-3}	---	4.2	3.5	4.2
Tee web load, P_t, lb x 10^{-3}	---	137.3	117.9	138.2
Area of brackets, in.^{2}	---	7.76	7.78	7.89
Maximum bracket stress, psi x 10^{-3}	5.1	11.2	29.9	9.9
Average bracket stress, psi x 10^{-3}	---	3.8	8.0	3.2
Bracket load, P_b, lb x 10^{-3}	---	29.5	62.4	25.0
Bracket load, $P-P_t$, lb x 10^{-3}	---	22.7	42.1	21.8

---

* Stresses given are for the axial direction.

** Stress was measured 20 inches from face plate on specimen 7.

Table 3. Results of low temperature tests

Specimen No.	5	6	7	8
Maximum load, lb x 10^{-3}	860*	774	944	1,129
Energy to failure, ft-lb	11,400*	61,800	45,190	68,800
Average stress on section A-A at maximum load, psi x 10^{-3}	25.6*	23.5	27.1	34.0

* Partial failure of specimen 5.

FIGURE LEGENDS

Fig. 1. Dimensions and details of bulkhead intersection tensile specimens.

Fig. 2. Laboratory set-up for elastic tests on specimen 6. Welded pulling tabs, pulling plates and eye fixture at right.

Fig. 3. Strain gage and thermocouple locations for specimen 8.

Fig. 4. Specimen 6 with strain gages and wiring attached.

Fig. 5. Specimen 7 in testing machine for test at 0°F. Near side of box removed. Long gage extensometers at top and to right.

Fig. 6. Specimen 5 - Principal stresses for a load of 160,000 lb. Principal stresses less than 1,000 psi not shown.

Fig. 7. Specimen 6 - Principal stresses for a load of 160,000 lb. Principal stresses less than 1,000 psi not shown.

Fig. 8. Specimen 7 - Principal stresses for a load of 160,000 lb. Principal stresses less than 1,000 psi not shown.

Fig. 9. Specimen 8 - Principal stresses for a load of 160,000 lb. Principal stresses less than 1,000 psi not shown.

Fig. 10. Distribution of axial stresses on tee web, section C-C. Load 160,000 lb.

Fig. 11. Distribution of axial stresses on section B-B. Load 160,000 lb.

Fig. 12. Distribution of axial strains on tee web, section C-C. Load 700,000 lb.

Fig. 13. Distribution of axial strains on section B-B. Load 700,000 lb.

Fig. 14. Load vs. center line extension.

Fig. 15. Specimen 6 after test at 0°F.

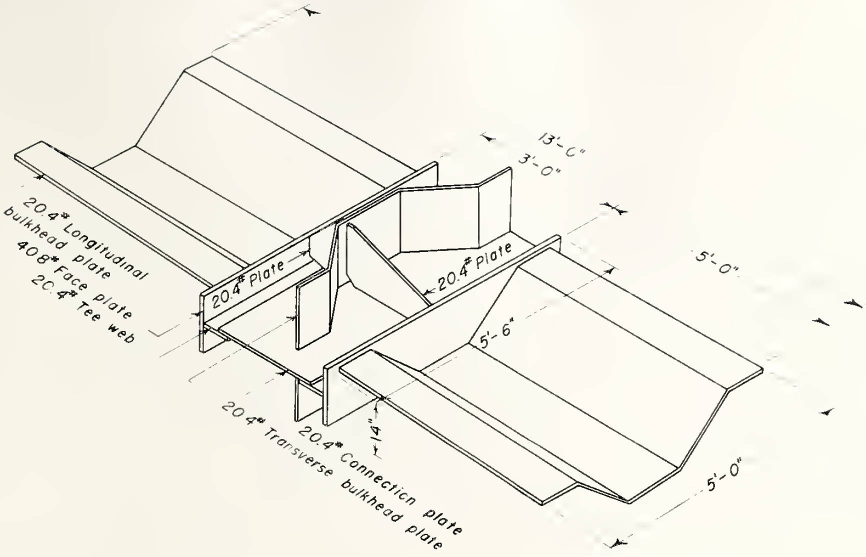

Specimens 5 and 6

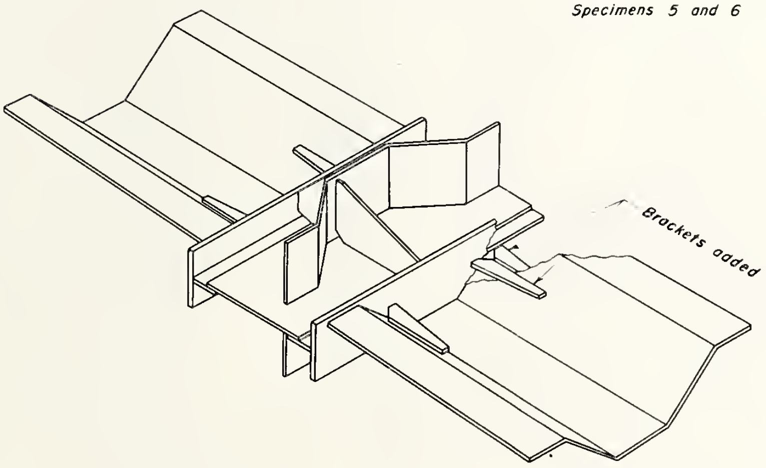

Specimen 7

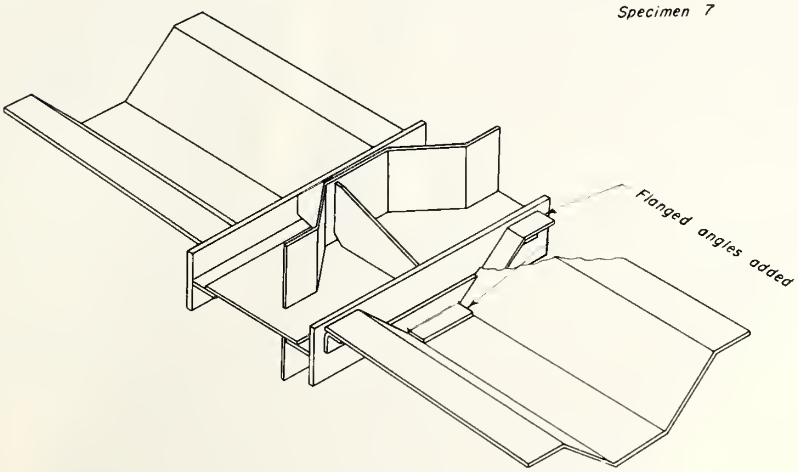

Specimen 8

Fig. 1

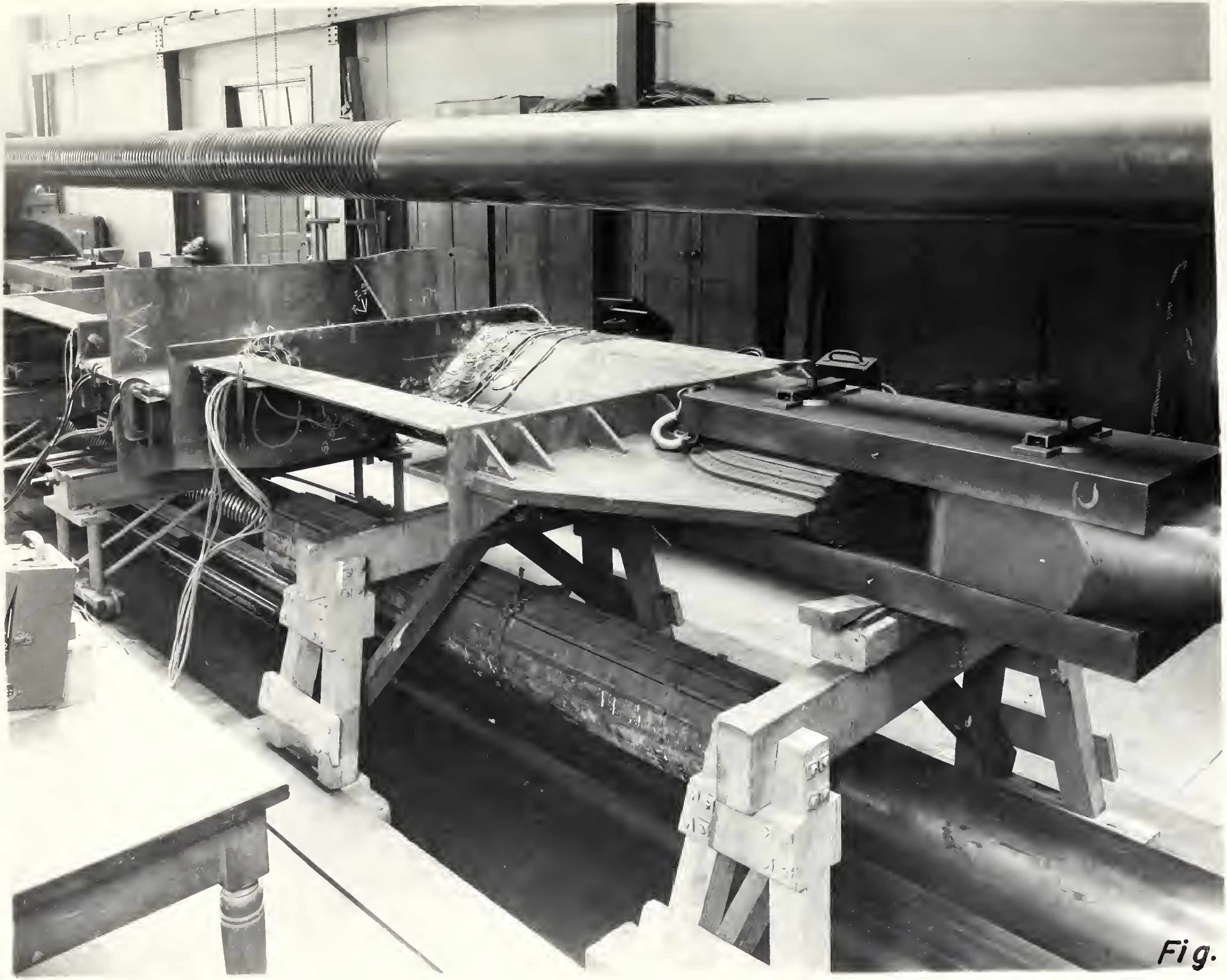

Fig. 2

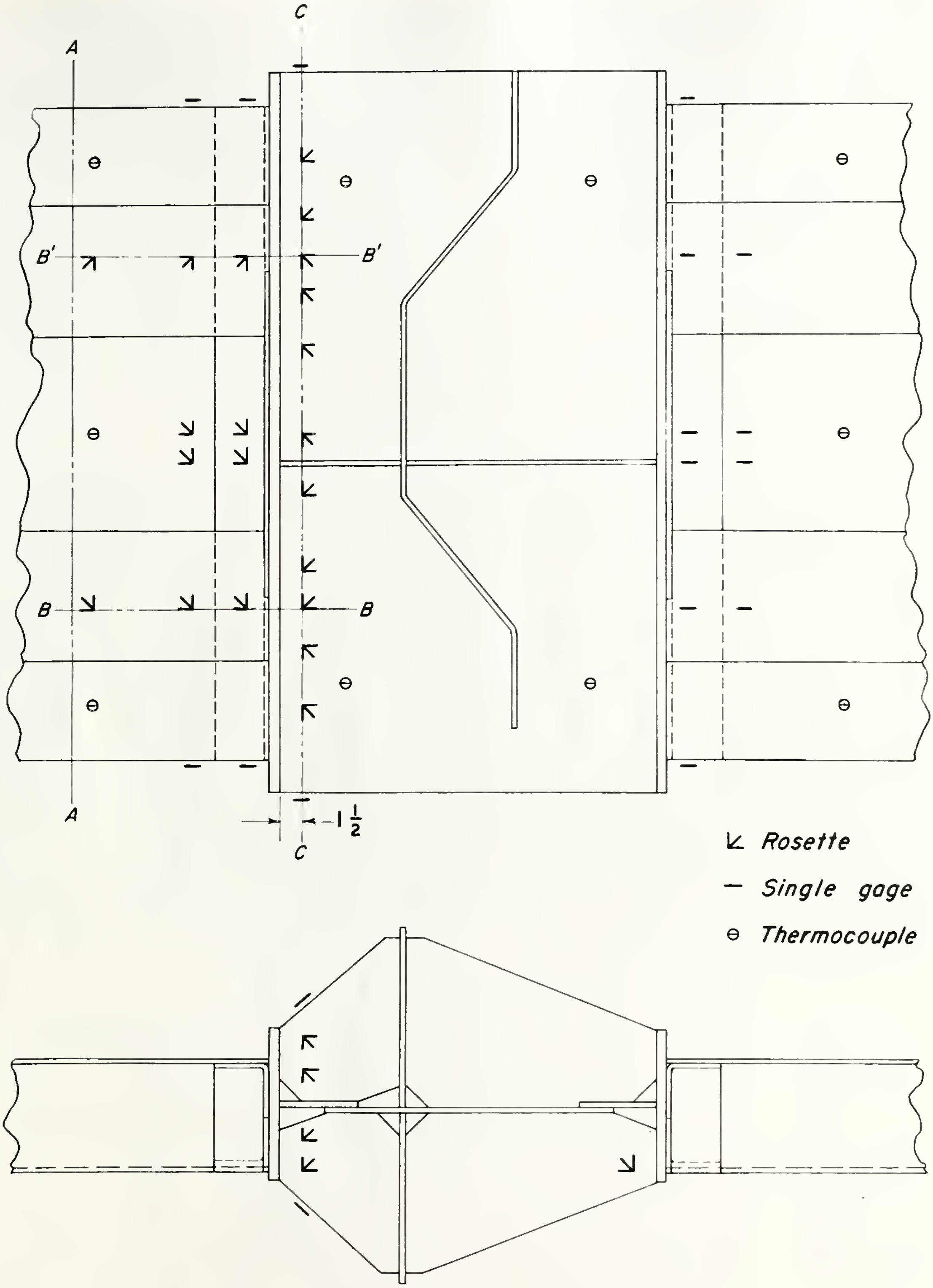

Fig. 3

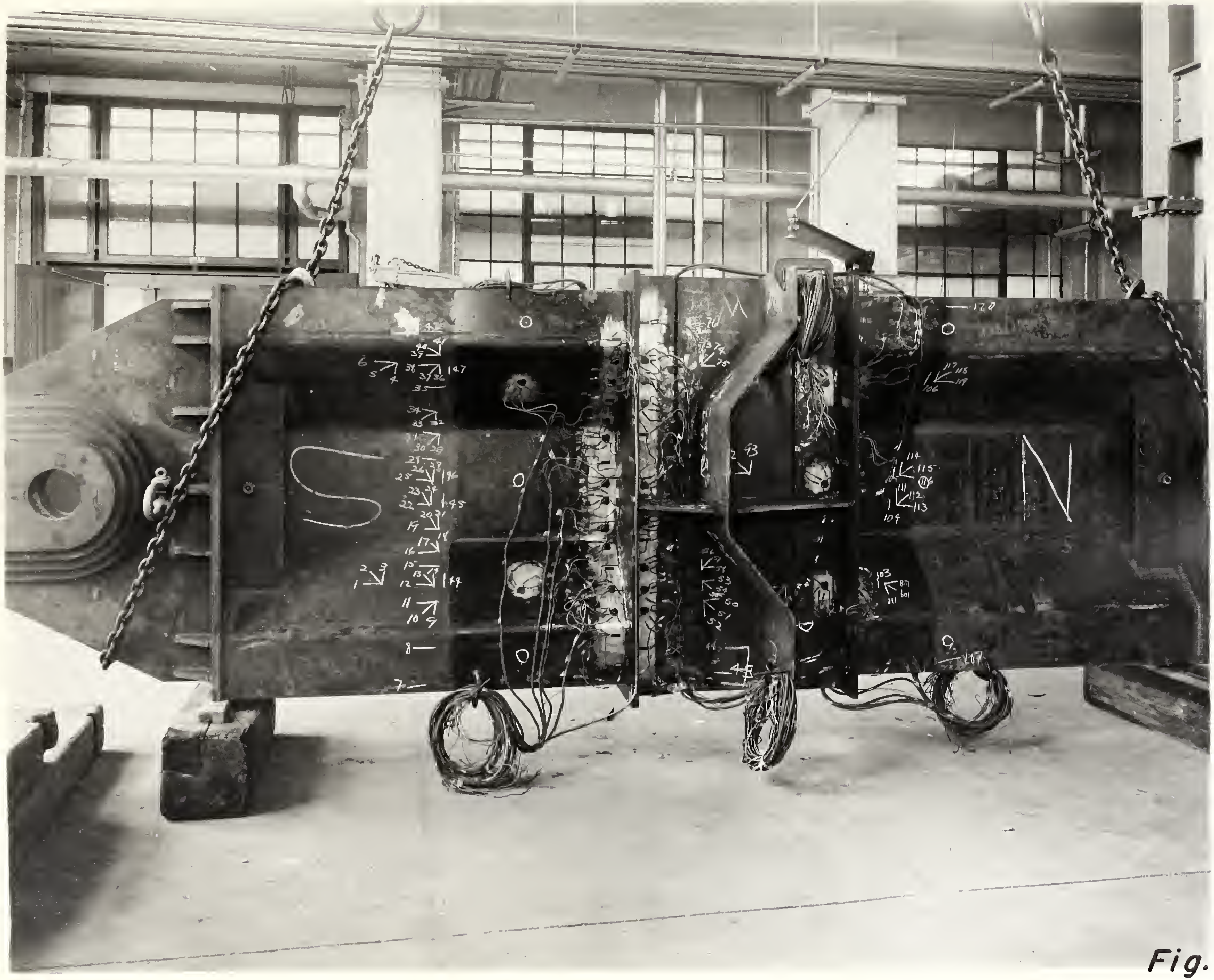

Fig. 4

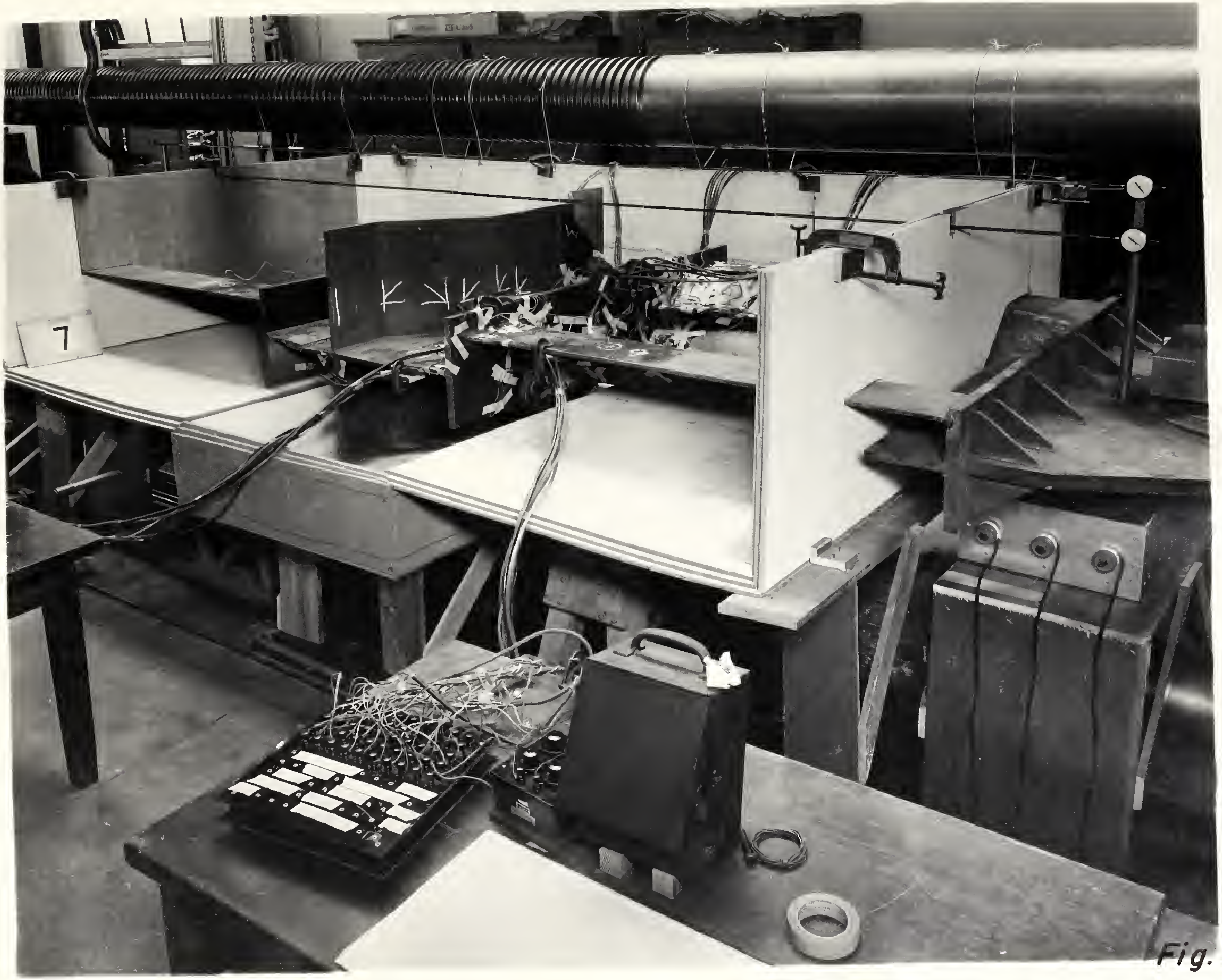

Fig. 5

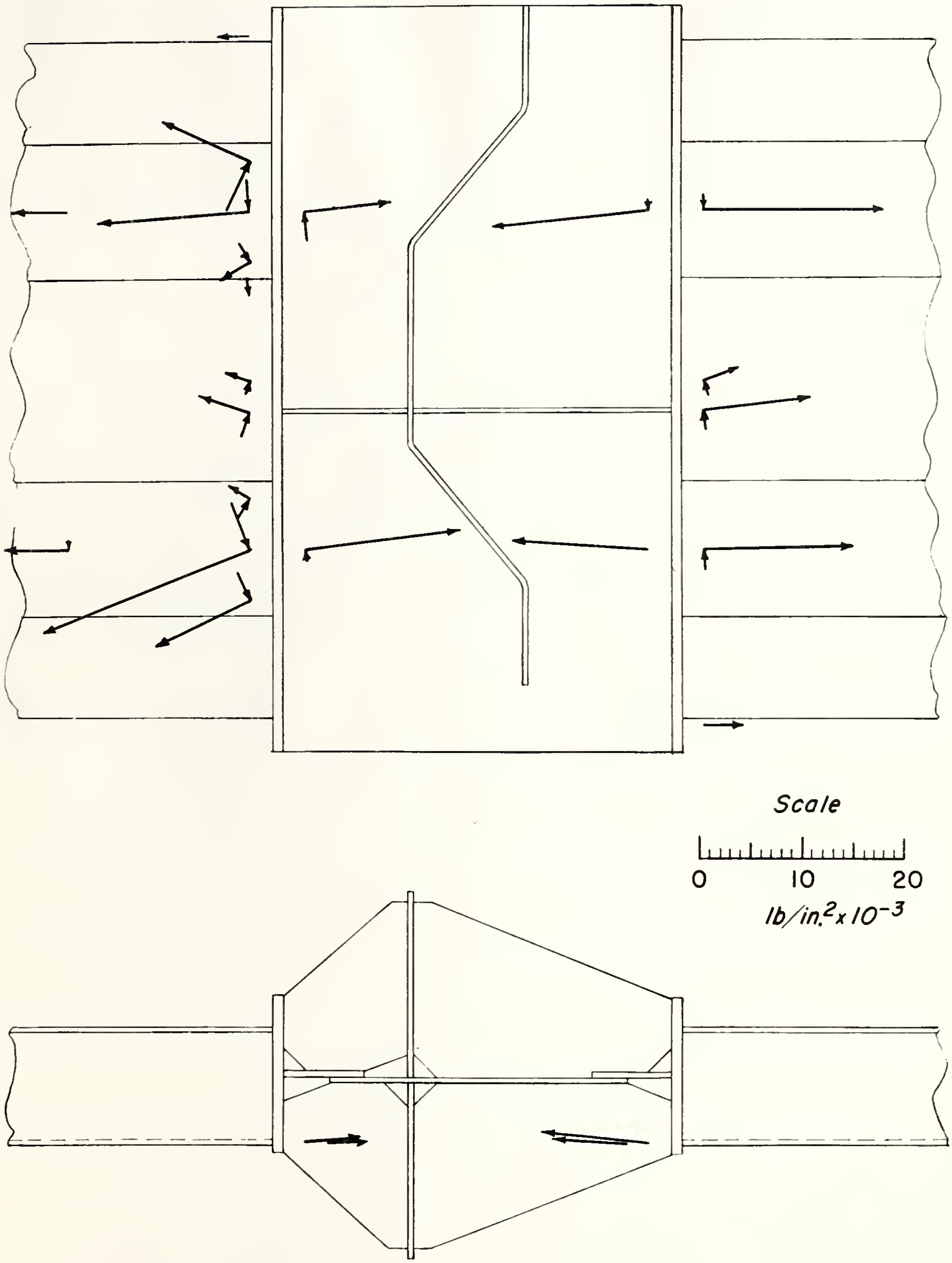

Fig. 6

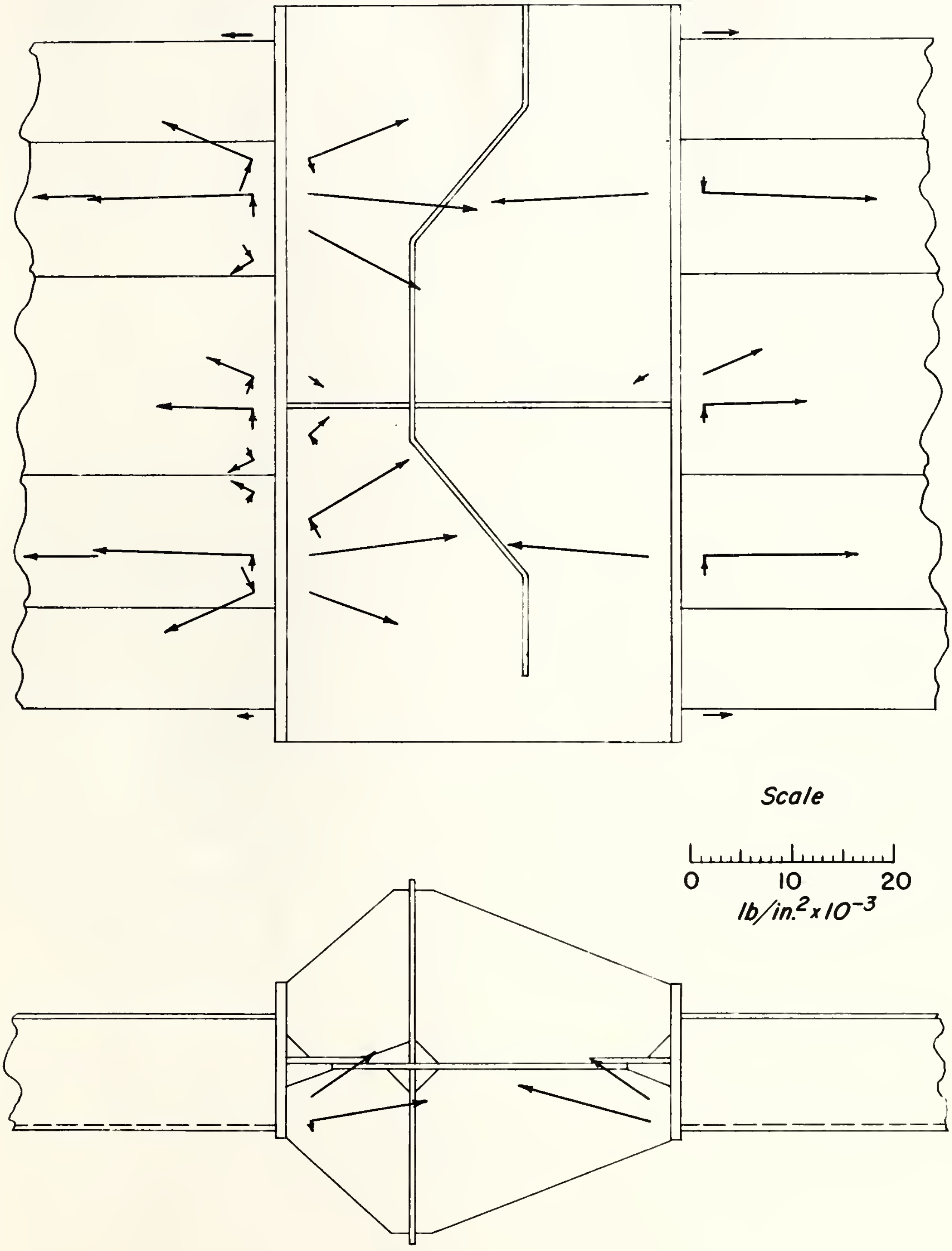

Fig. 7

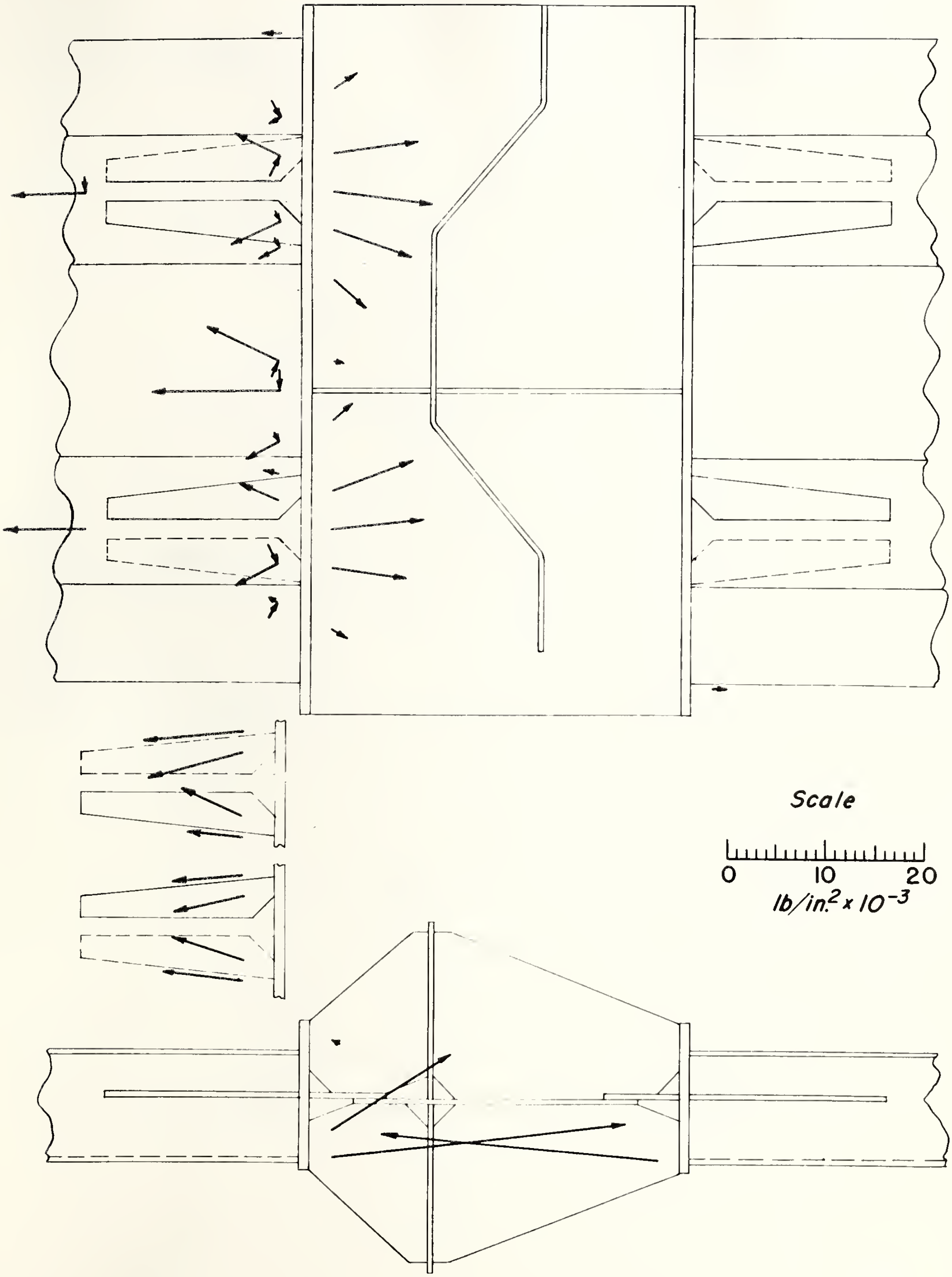

Fig. 8

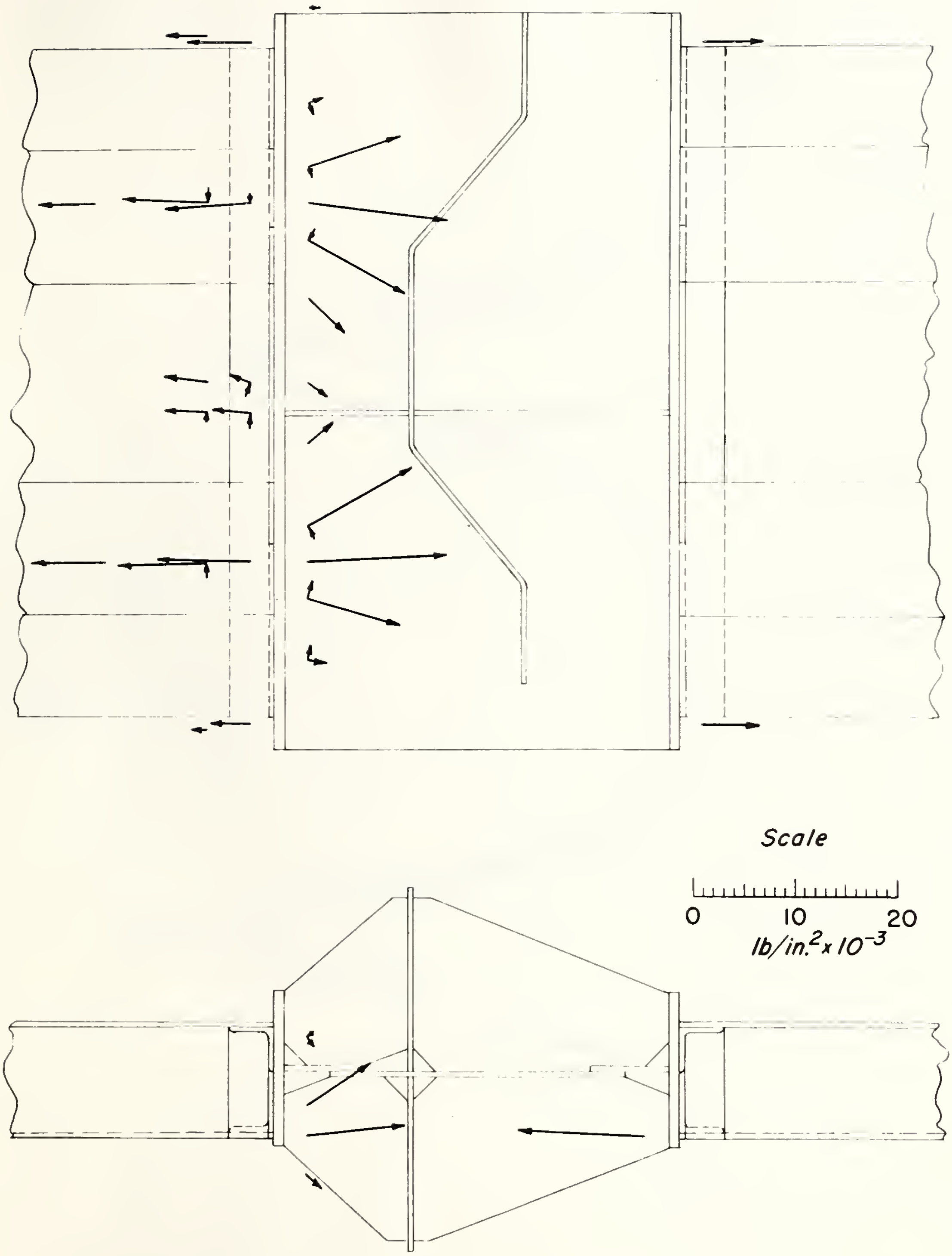

Fig. 9

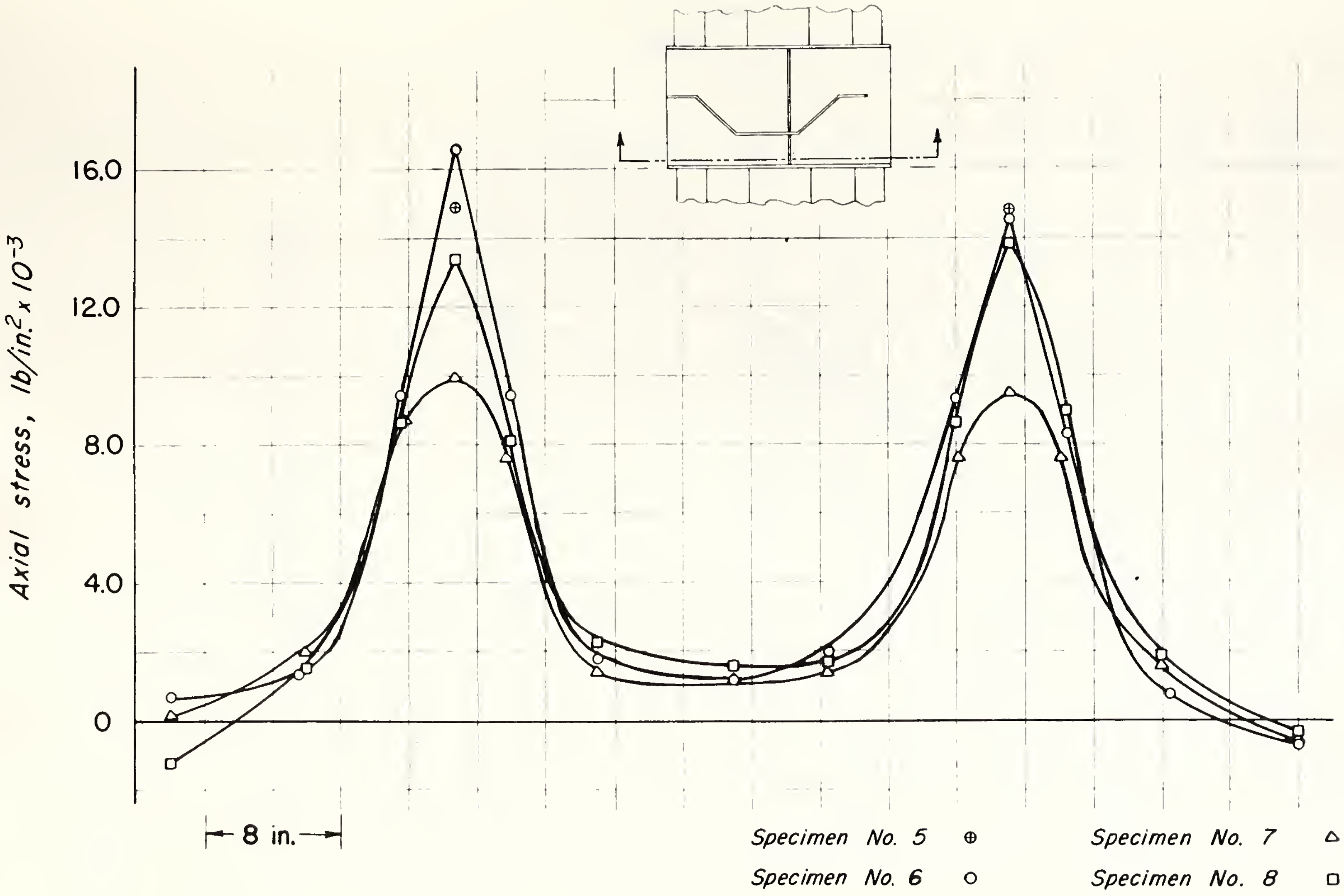
Axial stress, lb/in.^{2} x 10^{-3}
16.0
12.0
8.0
4.0
0
8 in.
Specimen No. 5 ⊕
Specimen No. 6 ○
Specimen No. 7 △
Specimen No. 8 □

Fig. 10

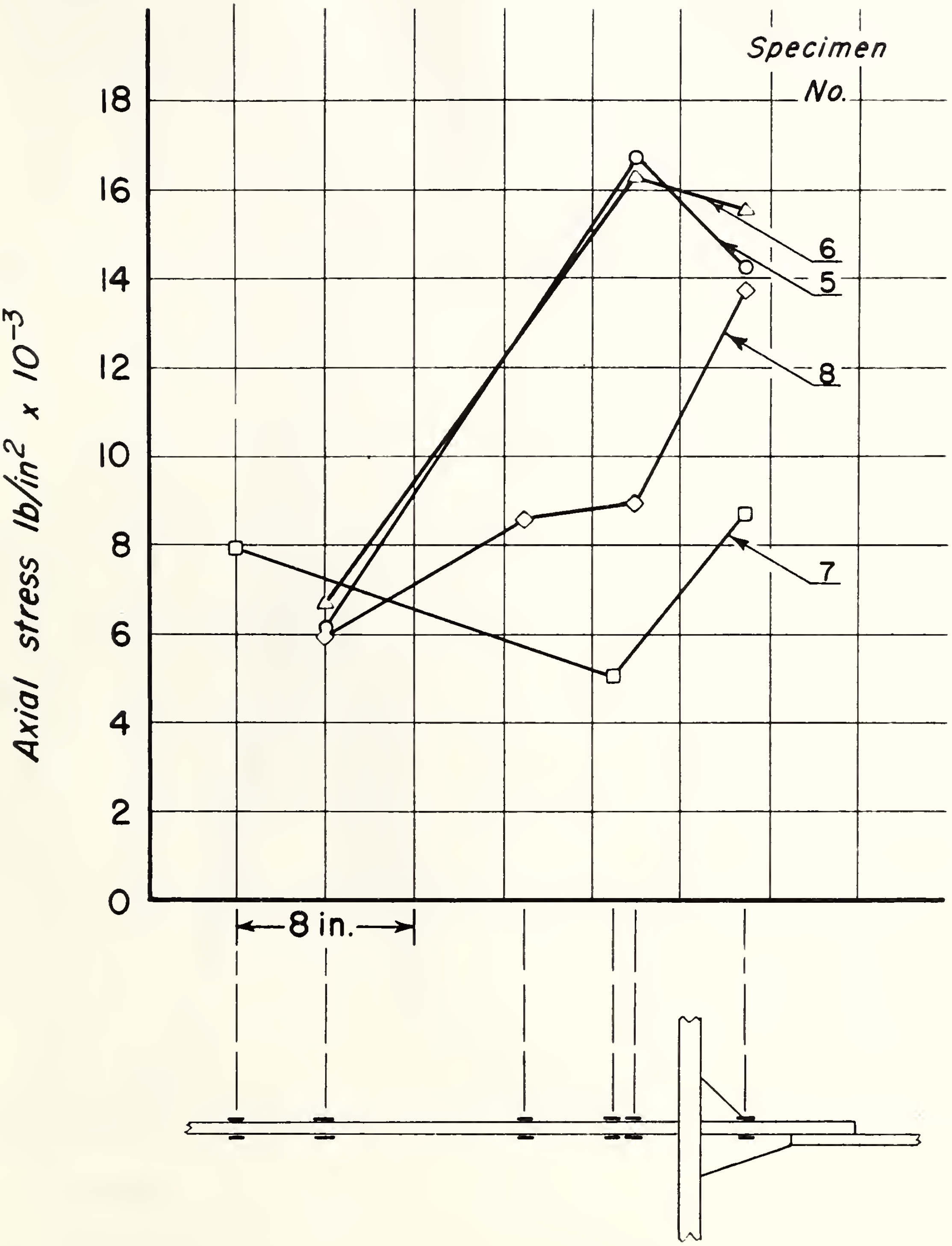
Axial stress lb/in^2 x 10^{-3}
0
2
4
6
8
10
12
14
16
18
Specimen No.
6
5
8
7
8 in.

Fig. 11

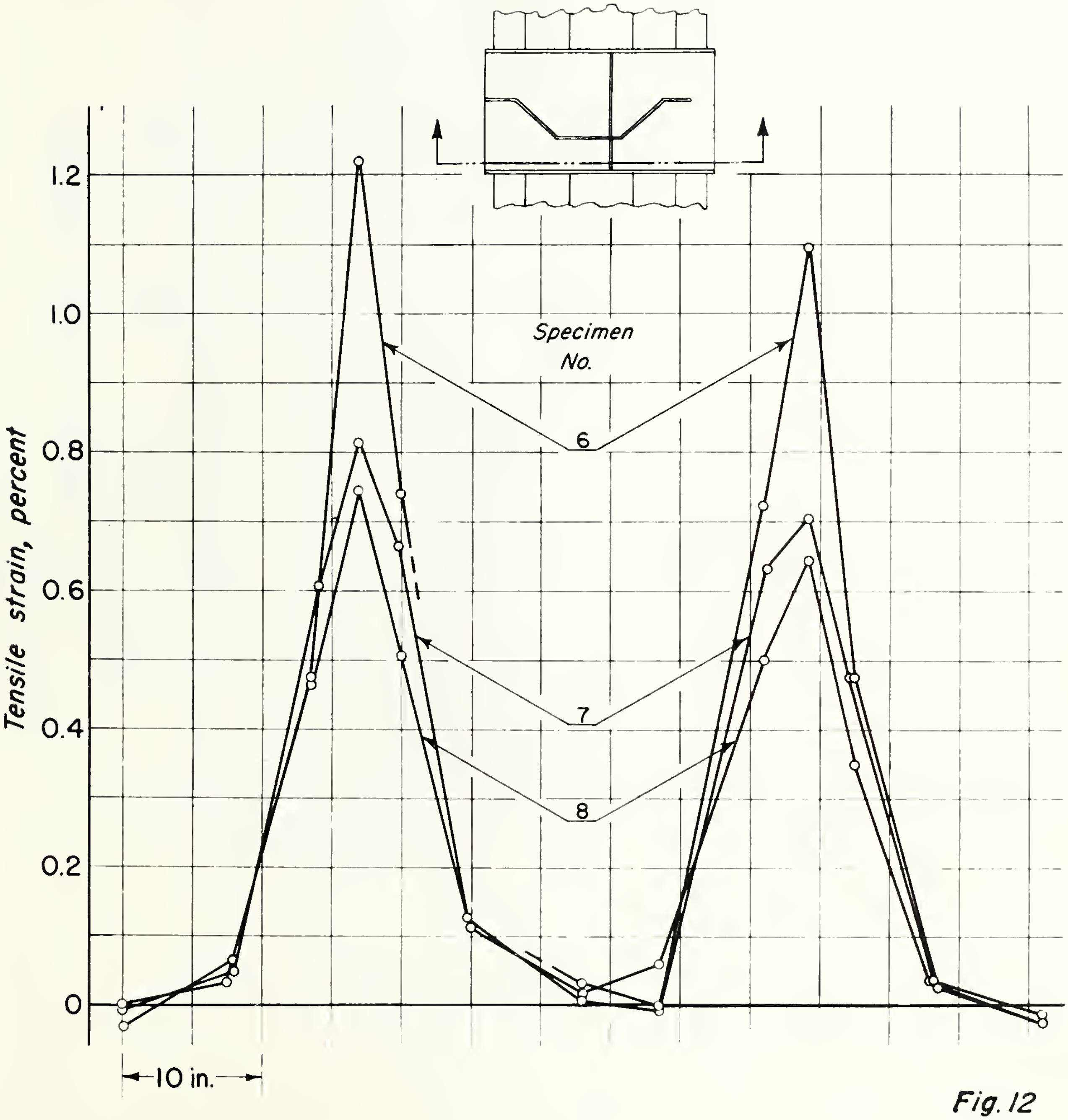

Tensile strain, percent
1.2
1.0
0.8
0.6
0.4
0.2
0
Specimen No.
6
7
8
10 in.

Fig. 12

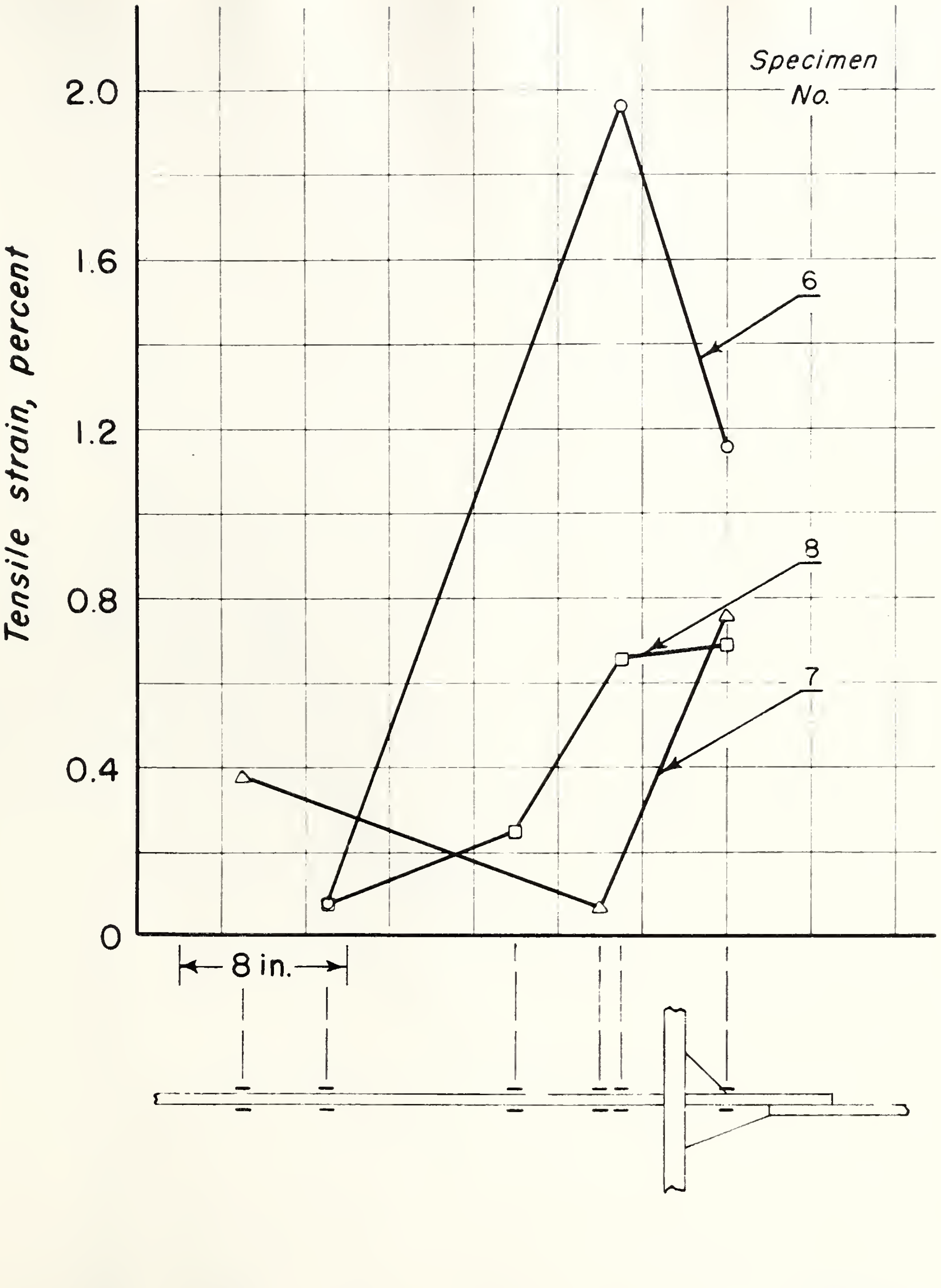

Fig. 13

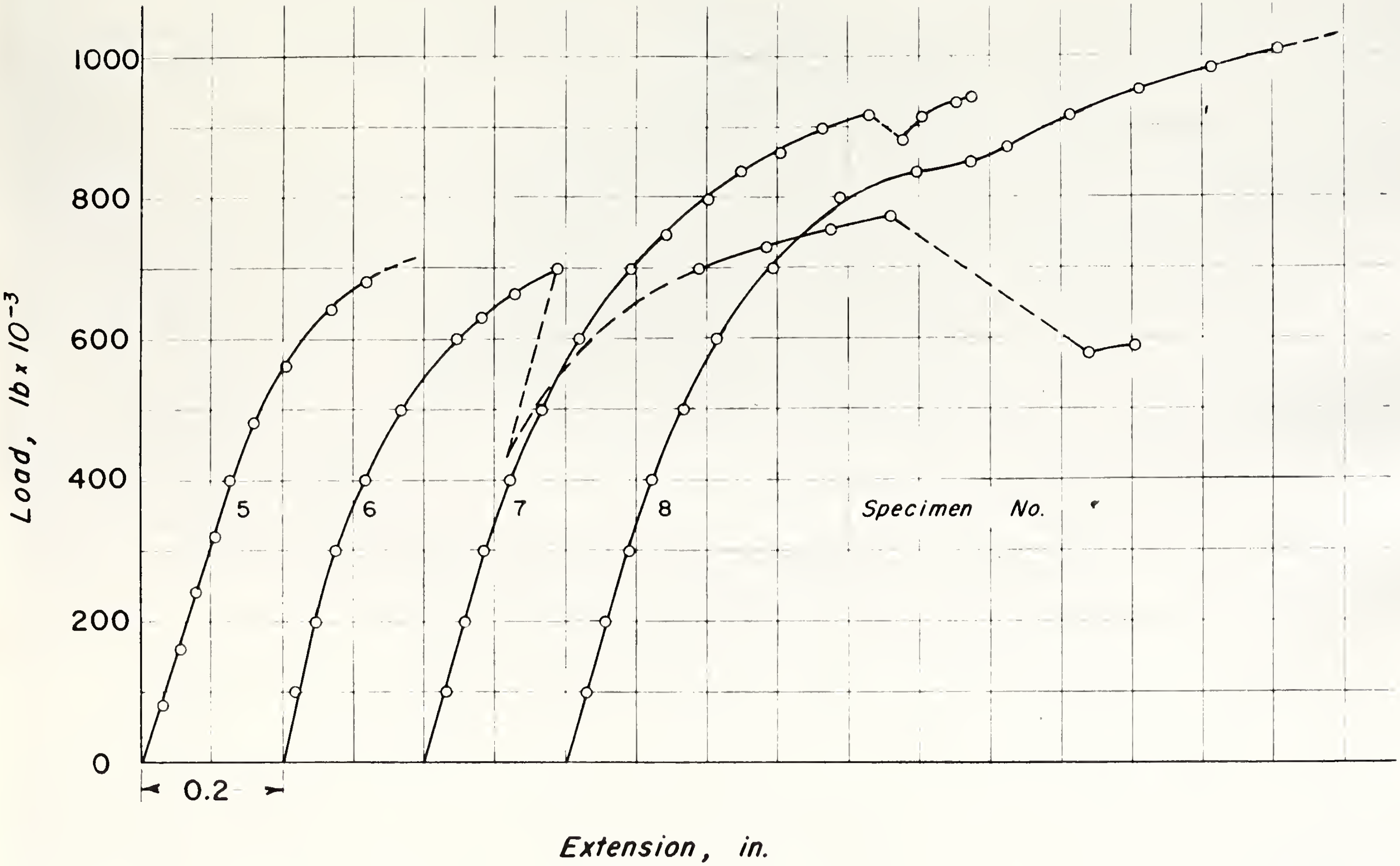
1000
800
600
400
200
0
Load, lb x 10^{-3}
0.2
Extension, in.
5
6
7
8
Specimen No.

Fig. 14

Fig. 15

Fig. 16

Fig. 17

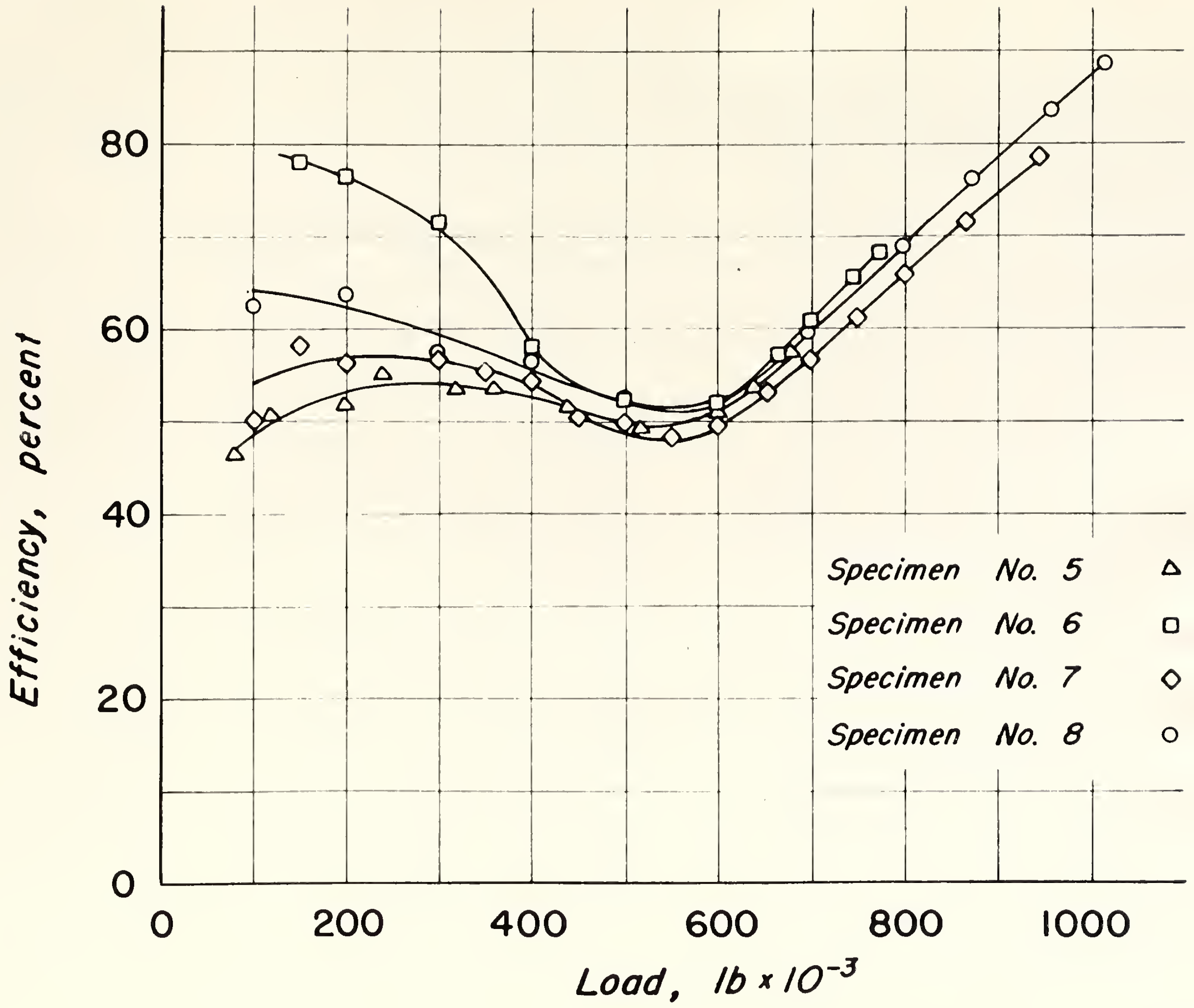

Efficiency, percent
0
20
40
60
80
Load, lb × 10⁻³
0
200
400
600
800
1000
Specimen No. 5 △
Specimen No. 6 □
Specimen No. 7 ◇
Specimen No. 8 ○

Fig. 18

THE NATIONAL BUREAU OF STANDARDS

Functions and Activities

The National Bureau of Standards is the principal agency of the Federal Government for fundamental and applied research in physics, mathematics, chemistry, and engineering. Its activities range from the determination of physical constants and properties of materials, the development and maintenance of the national standards of measurement in the physical sciences, and the development of methods and instruments of measurement, to the development of special devices for the military and civilian agencies of the Government. The work includes basic and applied research, development, engineering, instrumentation, testing, evaluation, calibration services, and various scientific and technical advisory services. A major portion of the NBS work is performed for other government agencies, particularly the Department of Defense and the Atomic Energy Commission. The functions of the National Bureau of Standards are set forth in the Act of Congress, March 3, 1901, as amended by Congress in Public Law 619, 1950. The scope of activities is suggested in the listing of divisions and sections on the inside of the front cover.

Reports and Publications

The results of the Bureau's work take the form of either actual equipment and devices or published papers and reports. Reports are issued to the sponsoring agency of a particular project or program. Published papers appear either in the Bureau's own series of publications or in the journals of professional and scientific societies. The Bureau itself publishes three monthly periodicals, available from the Government Printing Office: the Journal of Research, which presents complete papers reporting technical investigations; the Technical News Bulletin, which presents summary and preliminary reports on work in progress; and Basic Radio Propagation Predictions, which provides data for determining the best frequencies to use for radio communications throughout the world. There are also five series of nonperiodical publications: the Applied Mathematics Series, Circulars, Handbooks, Building Materials and Structures Reports, and Miscellaneous Publications.

Information on the Bureau's publications can be found in NBS Circular 460, Publications of the National Bureau of Standards (75 cents). Information on calibration services and fees can be found in NBS Circular 483, Testing by the National Bureau of Standards (25 cents). Both are available from the Government Printing Office. Inquiries regarding the Bureau's reports and publications should be addressed to the Office of Scientific Publications, National Bureau of Standards, Washington 25, D. C.


NBS