NAT'L INST. OF STAND & TECH R.I.C.
A11105 898589

NBS
PUBLICATIONS

NBSIR 81-2256

Analysis of Fire Data, Large-Scale Tests, and Small-Scale Tests for Conveyor Belts Used in Underground Coal Mines

Emil Braun
Robert E. Meade
Lee R. Smith

Center for Fire Research
National Engineering Laboratory
U.S. Department of Commerce
National Bureau of Standards
Washington, DC 20234

December 1980

Final Report

Issued May 1981

Sponsored in part by
U.S. Bureau of Mines
Pittsburgh, Pennsylvania 15213

and

Mine Safety and Health Administration
Triadelphia, West Virginia 26059

QC
100
.U56
81-2256
1981
c. 2

NATIONAL BUREAU
OF STANDARDS
LIBRARY

JUN 15 1981

not acc - Circ
QC100
.U56
no 81-2256
1981
c.2

NBSIR 81-2256

ANALYSIS OF FIRE DATA, LARGE-SCALE TESTS, AND SMALL-SCALE TESTS FOR CONVEYOR BELTS USED IN UNDERGROUND COAL MINES

Emil Braun
Robert E. Meade
Lee R. Smith

Center for Fire Research
National Engineering Laboratory
U.S. Department of Commerce
National Bureau of Standards
Washington, DC 20234

December 1980

Final Report

Issued May 1981

Sponsored in part by
U.S. Bureau of Mines
Pittsburgh, Pennsylvania 15213

and

Mine Safety and Health Administration
Triadelphia, West Virginia 26059

U.S. DEPARTMENT OF COMMERCE, Malcolm Baldrige, *Secretary*
NATIONAL BUREAU OF STANDARDS, Ernest Ambler, *Director*

TABLE OF CONTENTS

	Page
LIST OF FIGURES	iv
LIST OF TABLES	iv
Abstract	1
1. INTRODUCTION	1
2. FIRE INCIDENCE	2
2.1 Health and Safety Analysis Center	3
2.2 Lee Engineering	3
2.3 Allen Corporation of America	5
2.4 British Fire Experience	11
3. SCENARIOS	13
3.1 Hot Roller	13
3.2 Stuck Belt	17
3.3 Electric Arc	18
3.4 Fluid Ignition Sources	19
4. LARGE-SCALE TESTS	19
5. SMALL-SCALE TESTS	21
6. ACCEPTANCE TEST - MSHA (CFR TITLE 30 §18.65)	22
7. DISCUSSION	22
8. CONCLUSIONS	26
9. RECOMMENDATIONS	26
10. ACKNOWLEDGMENTS	27
11. REFERENCES	27
APPENDIX A: Review of Qualification Tests for Conveyor Belts in Coal Mines	A-1
APPENDIX B: Computation of Temperature Profile for the Hot Roller Scenario	B-1
APPENDIX C: Heat Transfer Calculations for an Electric Arc Near a Conveyor Belt	C-1
APPENDIX D: Ignition, Flammability, and Smoke Generation Characteristics of Conveyor Belts Used in Mines	D-1
APPENDIX E: Evaluation of the MSHA Test for the Flammability of Conveyor Belts	E-1
APPENDIX F: Standard Test Procedure for the Flammability of Conveyor Belts for Use in Underground Coal Mines	F-1

LIST OF FIGURES

		Page
Figure 1.	Summary of Consolidated Coal Company data on causes of underground coal mine conveyor belt fires - 1952 to 1970	7
Figure 2.	Allen Corporation data on the distribution of underground coal mine conveyor belt fires by duration - 1950 to 1977	8
Figure 3.	Summary of Allen Corporation data on causes of underground coal mine conveyor belt fires - 1950 to 1977	9
Figure 4.	Calculated temperature profile across a stationary roller in contact with a conveyor belt	16

LIST OF TABLES

Table 1.	Summary of Health and Safety Analysis Center injury data on coal mine fires	4
Table 2.	Relative frequency values of various ignition sources for conveyor belt fires in underground coal mines (Allen Corporation)	10
Table 3.	Number of incidents of conveyor belt fires in underground coal mines from three U.S. sources and Great Britain	12
Table 4.	Predicted hot roller temperature and the instantaneous interface contact temperature for SBR conveyor belts	15
Table 5.	The effect of airflow rate on afterflame time on selected conveyor belts tested in the MSHA test (30:18.65) using a natural gas burner	23
Table 6.	The afterflame time of selected conveyor belts tested on the MSHA (30:18.65) apparatus as a function of time to steady-state air velocity	24

ANALYSIS OF FIRE DATA, LARGE-SCALE TESTS, AND SMALL-SCALE TESTS FOR CONVEYOR BELTS USED IN UNDERGROUND COAL MINES

Emil Braun, Robert E. Meade, and Lee R. Smith

Abstract

An investigation into the requirements and fire test performance of conveyor belts intended for use in underground coal mines was conducted. The purpose of this study was to develop recommendations for the Mine Safety and Health Administration (MSHA) on a test method suitable for measuring the fire hazard potential of a conveyor belt in a coal mine environment. A review of fire incidence data, large-scale tests, and small-scale tests was conducted to provide the necessary information. The incidence data was analyzed with the goal of developing scenarios that could form the basis for the development of a suitable new test or to evaluate the appropriateness of the existing test.

Large-scale tests were reviewed to determine anticipated belt fire performance under "realistic" end-use conditions. The tests showed the effect of geometry, input energy, and ventilation control on belt fire performance. Small-scale test results provided information on specific fire properties such as ease of ignition, flame spread, and smoke generation potential.

Key words: Accident data; coal mines; conveyor belts; fire safety; fire tests; flame spread; ignition; test methods.

1. INTRODUCTION

At the request of the Mine Safety and Health Administration (MSHA) and the Bureau of Mines (BOM), the Center for Fire Research (CFR) has conducted an investigation into the requirements and fire test performance of conveyor belts intended for use in underground coal mines. The aim of this study was to develop recommendations for MSHA on a test method for measuring the fire hazard potential of conveyor belts in a coal mine environment.

The 1969 Federal Coal Mine Health and Safety Act [1][1] requires that the Secretary of the Department of the Interior establish and maintain an incidence data base for coal mine operations and issue regulations to insure the health and safety of coal mine workers. The 1977 Amendments [2] to this Act have transferred the regulatory authority to the Secretary of Labor. The incidence data base is intended to make available the information necessary for determining priorities and assessing the impact of various regulations. Fire incidents involving conveyor belts exposed to incidental fires are included in this data base.

Scenarios were developed from this data base and other sources of fire incidence data. Review of the data obtained from small-scale and large-scale fire tests of conveyor belts and conveyor belt systems provides additional information for determining the effectiveness and appropriateness of the current regulation on conveyor belt fire performance contained in Title 30, Code of Federal Regulations.

The Code of Federal Regulations Title 30 [3] currently describes a test method and acceptance criteria for approval of conveyor belts used in underground coal mines. The test method defines: number of specimens tested, specimen orientation, ventilation conditions, ignition source, and exposure time. Measurements are made of the afterflame time and afterglow time of each specimen. Acceptable performance is an average afterflame time of less than 60 seconds and an average afterglow time of less than 180 seconds.

This report summarizes the available data and presents recommendations as to the appropriate actions to be followed by MSHA in regulating the fire performance of conveyor belts in underground coal mines.

2. FIRE INCIDENCE

Incidence data was obtained from three sources. The MSHA's Health and Safety Analysis Center (HSAC) located in Denver, Colorado, furnished information on all reportable incidents from 1972 to 1977. A more comprehensive collection of fire incidence data was obtained from the Allen Corporation [5]; and William Jamison [4] of Consolidated Coal Company provided a summary of national conveyor belt fire incidents from 1952 until 1970. These data were analyzed to define "typical" fire scenarios involving underground coal mine conveyor belts.

---

[1] Numbers in brackets refer to the references at the end of this report.

Several summary reports received from England were also reviewed. Gross comparison were made between United States experience and British experience as reported by the National Coal Board.

2.1 Health and Safety Analysis Center (HSAC)

Under provisions of the Federal Coal Mine Health and Safety Act of 1969, the HSAC is required to maintain a reporting system. Data has been compiled since 1972 on accident, injury, illness, employment, and production for anthracite and bituminous coal mines and preparation plants in the United States. Fire incidence data is accepted into the system if it meets the requirements of reportability.

A reportable fire incident is one in which (1) an individual is injured or (2) the fire persist for at least 30 minutes from the time of discovery. This latter requirement means that fires successfully extinguished, without injury, in less than 30 minutes are not reported. This is independent of the extent of damage to equipment or productivity.

Accident data obtained from HSAC covers the period 1972 to the third quarter of 1977. There were a total of 148,781 reported mine injuries, with approximately 1/4% (431) attributed to fires (see table 1), and 50% of these (216 injuries), occurring in underground coal mines. Of these 216 injuries, eight were as a result of conveyor belt fires. This represents a total of six conveyor belt related accidents reported to HSAC during the period 1972 to 1977. According to HSAC, underground coal mines experience approximately one reportable conveyor belt fire every year. The primary causes of these incidents were frictional heating of a jammed roller or failure in the electrical system (i.e., power line arcing).

2.2 Lee Engineering

In a recent meeting of the National Fire Protection Association (NFPA) Mining Safety Committee, W. B. Jamison [4] of Consolidated Coal Company, Lee Engineering Division, presented a summary of conveyor belt fires recorded by the U.S. Bureau of Mines covering the period July 1952 to July 1970. No information was presented on the manner in which the data were obtained nor what fraction of all fire incidents these represented. However, the data was an attempt at defining failure modes of a conveyor belt system that result in the initiation of a fire.

Table 1

Summary of Health and Safety Analysis

Center Injury Data on Coal Mine Fires

Year	Underground	Others	Total Fire Injuries	Total Injuries	Total Fire Injury %
1972	45	28	73	30,080	.24
1973	39	40	79	28,641	.28
1974	9	30	39	17,840	.22
1975	31	32	63	23,060	.27
1976	53	51	104	29,840	.35
1977 (3/4)	39	34	73	19,320	.38
TOTAL	216	215	431	148,781	.29

Figure 1 is a summary of these data showing the frequency of various failure modes. It can be seen that after 1960 the total number of fires began to decline. What is more significant is that during this period the number of fires caused by stuck belts remained relatively constant. To a large extent, the decline in total incidents over this time period, 1960-1970, can be attributed to a reduction in fires caused by the "other" and "hot roller" classifications. The "other" category would include frictional heating that ignited coal or wood supports as well as failures that ignited oil or other combustibles found around a conveyor system. Reduction of these type of fires are primarily the result of improved maintenance and housekeeping.

2.3 Allen Corporation of America

The Allen Corporation recently completed an annotated bibliography of coal mine fire reports [5]. The report covers the period 1950 to 1977. Incidence data was obtained from MSHA field offices as well as HSAC and various periodicals. The data base, therefore, includes all reportable and some nonreportable fires. The bibliography does not include explosions or ignitions and fires resulting from explosions. However, fires that may have later caused an explosion are included.

The Allen Corporation compiled records of a total of 1,014 underground coal mine fires. Of this total, 154, or 15%, were thought to have originated with the conveyor belt system. An analysis of all underground coal mine fires shows that 92% of the incidents are free of injuries and 97% produce no deaths. Comparable figures for conveyor belt fires yield 94% injury free and 97% death free incidents. This indicates that conveyor belt fires have approximately the same probability of causing an injury or death as all fires in coal mines. Based on Allen Corporation data, there have been 10 fire incidents involving injuries and six fire incidents involving deaths in coal mines since 1970. During the same period, fire incidents involving conveyor belts have resulted in no injuries or deaths.

A summary of failure modes for the 154 conveyor belt incidents is shown in figure 3. This distribution does not differ greatly from that derived from the previous source. Both figures 1 and 3 show a maximum number of incidents between 1960 and 1965 followed by a steady decline in succeeding years. Following the implementation in 1952 of the Coal Mine Health and Safety Act, the frequency of reported conveyor belt fires increased dramatically. The passage of the 1969 safety legislation was accompanied by as dramatic a decrease in conveyor belt fires. McDonald [5], the principle investigator for Allen Corporation, noted that the number of fires, overall, followed a pattern

that was independent of production, which has remained relatively constant. The 1952 legislation coincided with an increase in mechanization in the coal mine industry. This appears to have mated high powered equipment susceptible to fires with manpower unskilled in the proper use of modern mining equipment. It may be possible that by 1969 a skilled workforce had developed with an increased awareness of safety. It has been assumed that further decreases in succeeding years may have had as much to do with incident reporting requirements in the 1969 legislation as with any real improvements in worker safety. Prior to the 1969 Coal Act, reportable fire incidents were not defined. The 1969 Coal Act established a minimum time interval between fire detection and extinguishment before a fire incident becomes reportable.

Figure 2 summarizes the incident data from 1950 to 1977 by fire duration. Three fire categories are shown: fires that were extinguished within a half-hour of discovery; fires that took at least a half-hour to extinguish; and fires whose total duration from discovery to extinguishment were unknown or not reported. The data indicates that the percentage of known fires whose duration exceeded the half-hour minimum has remained relatively constant. Since 1969, the percentage of fires of unknown duration have decreased, while the number of fires extinguished within a half-hour have increased slightly. This suggests that fire safety in underground coal mines has been steadily improving. The decrease in the number of reported incidents does not appear to be due to the elimination of fires of less than 30 minute duration.

Table 2 is a relative frequency tabulation of the data in figure 3. The frequency values in the table are computed relative to the data for each interval. It indicates that the bulk of the incidents, 65%, were caused by one of three failures:

- Stuck belt.
- Hot roller.
- Electrical arcing.

In addition to the dramatic decrease in the total number of incidents, figure 3 shows that no conveyor belts have ignited from stuck belts being heated by operating drive motors since 1972.

With the decline in the total number of conveyor belt fires leveling off at approximately two fires per year, it is of importance to note the severity of these fires as a measure of fire control capabilities and to determine the likelihood of occurrence of a serious mine fire originating in the conveyor system. Wanchek [6] analyzed the extinguishment requirements for underground

Figure 1 - Summary of Consolidated Coal Company data on causes of underground coal mine conveyor belt fires - 1952 to 1970

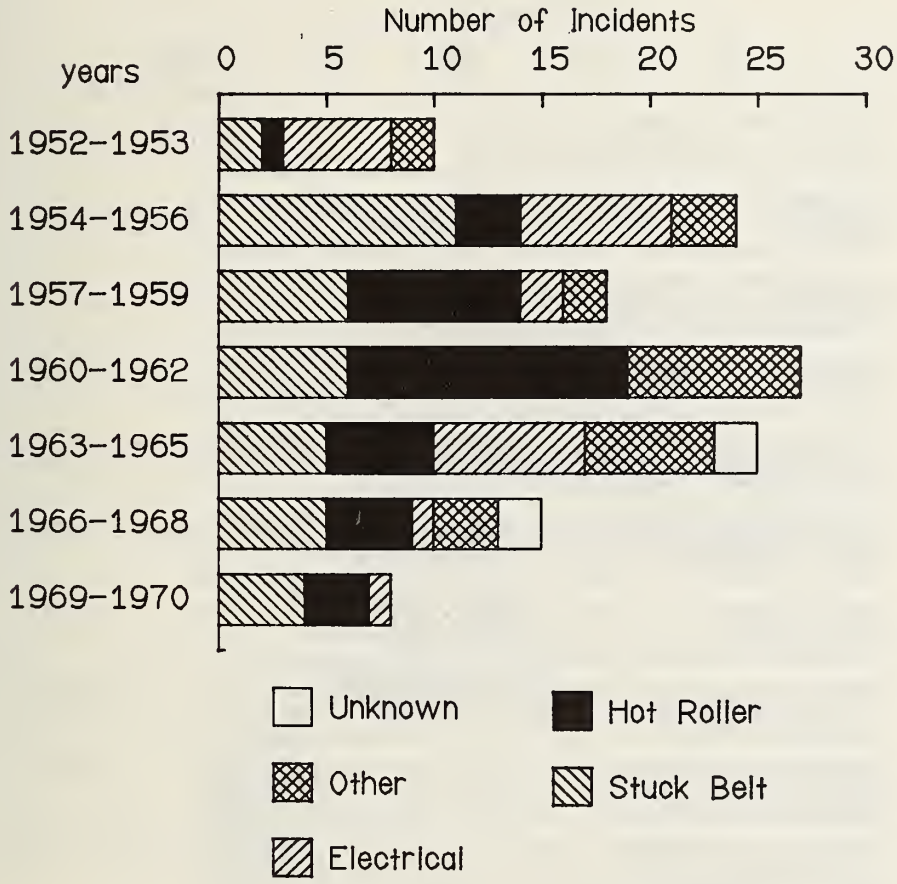

Figure 2 – Allen Corporation data on the distribution of underground coal mine conveyor belt fires by duration – 1950 to 1977

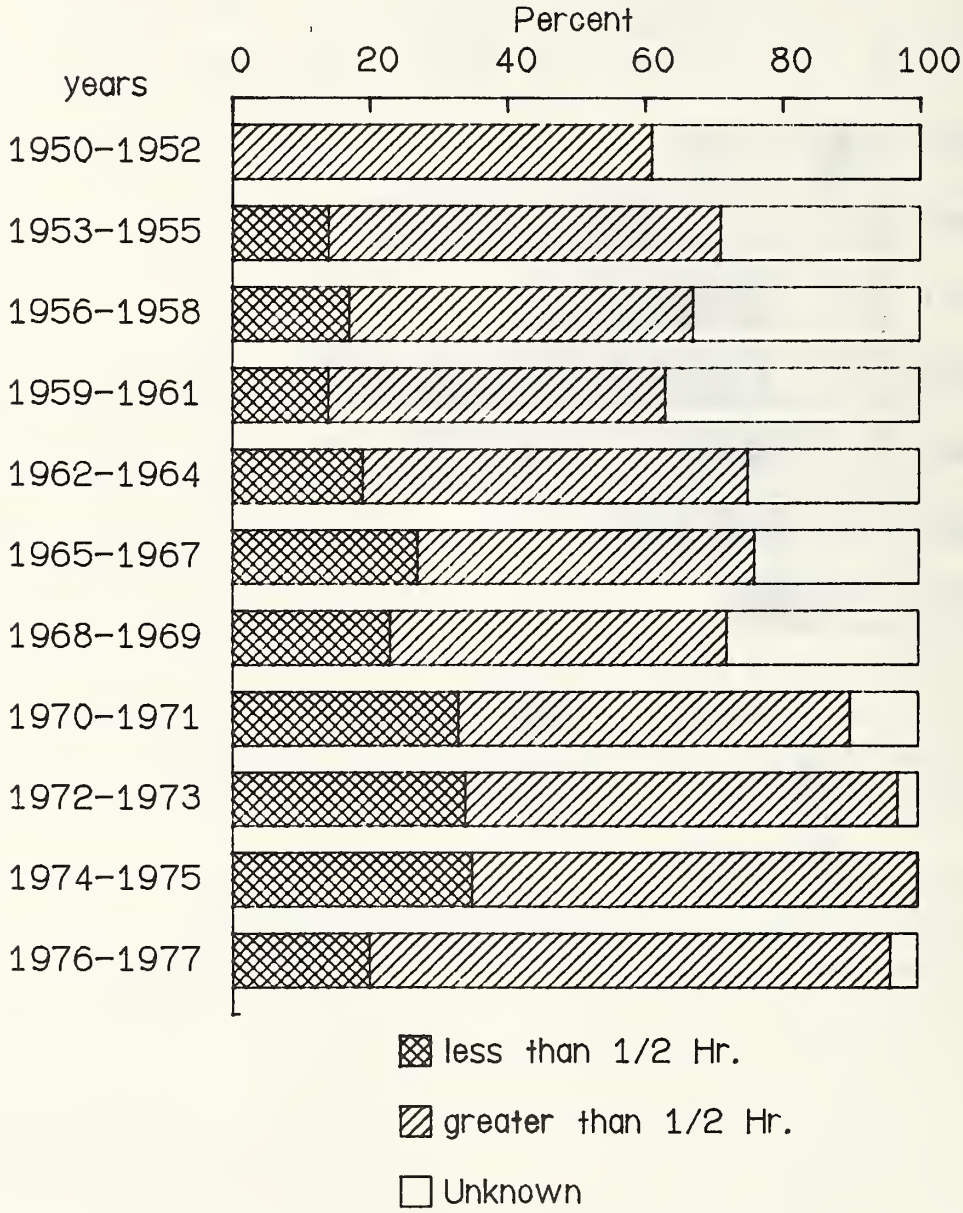

Figure 3 - Summary of Allen Corporation data on causes of underground coal mine conveyor belt fires - 1950 to 1977

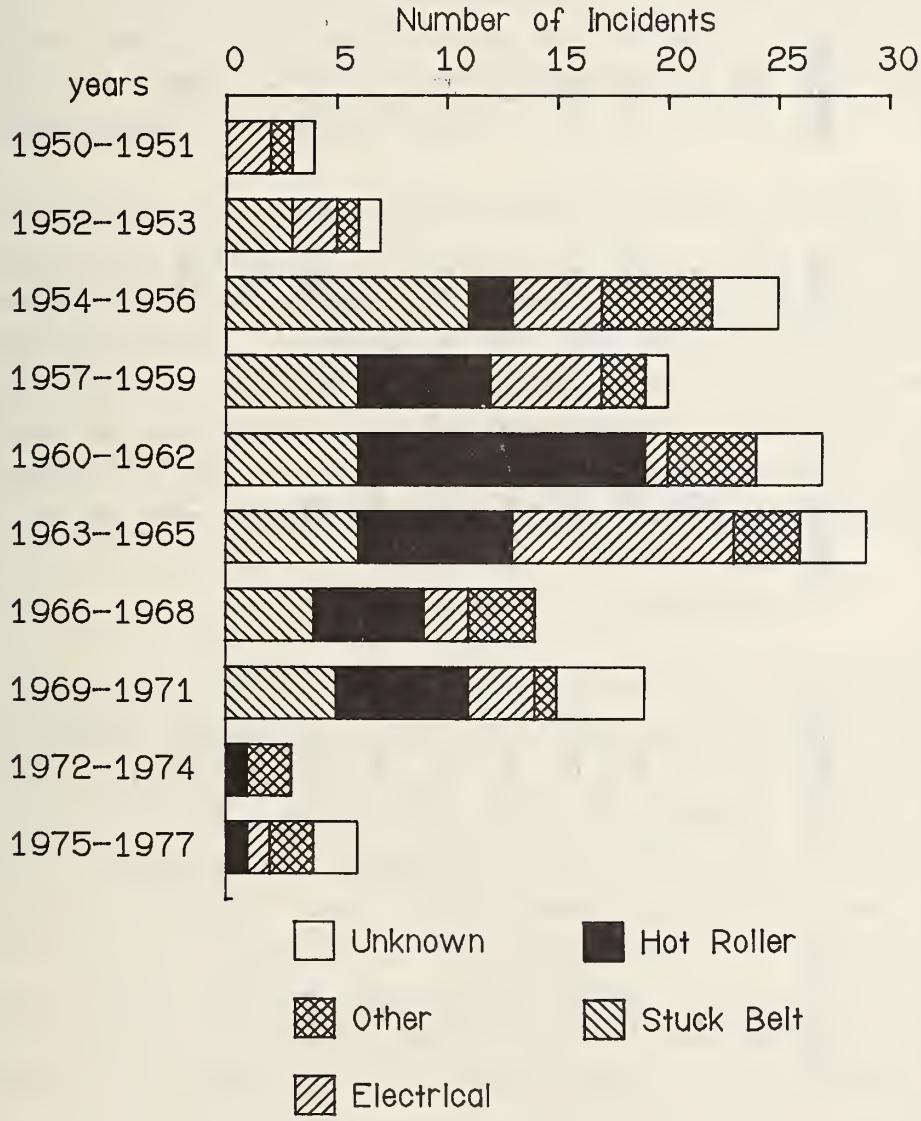

Table 2

Relative Frequency Values of Various Ignition Sources
for Conveyor Belt Fires in Underground Coal Mines (Allen Corporation)

Year	Stuck Belt	Hot Roller	Electrical	Other	Unknown
1950-51	.50	-	-	.25	.25
1952-53	.43	-	.29	.14	.14
1954-56	.44	.08	.16	.20	.12
1957-59	.30	.30	.25	.10	.05
1960-62	.22	.48	.04	.15	.11
1963-65	.21	.24	.34	.10	.10
1966-68	.29	.36	.14	.21	-
1969-71	.26	.32	.16	.05	.21
1972-74	-	.33	-	.67	-
1975-77	-	.17	.17	.33	.33

coal mine conveyor belt fires from 1960 to 1977. He found that in 14% (10) of the fires occurring between 1960 to 1969, secondary measures had to be employed before the fire was successfully extinguished. In nearly all cases the fire area had to be sealed and in one case the entire mine was sealed. A similar review of fire incidents between 1970 and 1977 showed that 10% of the fires required protracted firefighting before the fire was extinguished. It should, however, be noted that between 1970 and 1977 only one serious fire is represented by the 10% figure.

United States incidence data clearly shows a downward trend in the number of underground coal mine conveyor belt fires. This may be caused by several factors such as improvements in personnel training, equipment, maintenance, or protective devices. However, it may also be an artifact of the reporting system. Prior to the 1969 Coal Act there were no specified conditions that required the submittal of an incident report. Since the issuance of the Act, an operator is required to report a mine fire only if it is not extinguished within 30 minutes of discovery or if any injuries occurred.

2.4 British Fire Experience

Since very little documentation exists for nonreportable fires in the U.S., several reports were obtained from Her Majesty's Chief Inspector of Mines and Quarries, London, England [7,8]. These reports present summary fire data on British experiences with underground conveyor belts. Their reporting system is more comprehensive in that any incident is reportable. British data indicate that, while there are fluctuations in the number of mine fires for a given year, the total number of conveyor belt fires has remained fairly constant from year to year. Table 3 is a summary of these data compared to the three sources of U.S. data over corresponding years. Of those values listed in the last column of table 3, approximately one-third (61) of the British conveyor belt fires were caused by hot rollers and a little less than one-third (53) were caused by overheating of the conveyor system brakes. While failures in the braking system of U.S. conveyors have not been reported, table 2 indicates that U.S. experience with hot roller failures has been very much the same.

While comparisons of this kind can be revealing, it should be pointed out that the data have not been normalized against any measurable factors such as man-hours, tons produced, or linear feet of conveyors in operation. It is not clear if the difference between Britain and the U.S. is due to production variations, safety measures, or differences in reporting requirements.

Table 3

Number of Incidents of Conveyor Belt Fires in Underground Coal Mines From Three U.S. Sources and Great Britain

Year	HSAC[a]	Allen Corporation[b]	Con Sol[c]	Great Britain[d]
1968-69	-	14	10	50
1970-71	-	9	1[e]	48
1972-73	1	3	-	40
1974-75	2	2	-	43
1976-77	3	4	-	-
TOTAL	6	32	11	181

[a] Includes only fires which caused injury or which were not extinguished within 30 minutes.

[b] May include fires that were reported but did not meet HSAC acceptance criteria (a).

[c] Consolidated Coal Company's summary of U.S. Bureau of Mines data.

[d] Includes all fires which occurred.

[e] Only 1 year.

3. SCENARIOS

In appendix A several conveyor belt qualification tests are reviewed. Initial design considerations that guided the development of these tests were deduced from an analysis of the test conditions. Several scenarios were deduced from the operational conditions of the test methods. A scenario is a sequence of critical events (component failure, ignition, growth, and spread of a fire) that can result in a fire loss.

It is shown in appendix A that existing test methods appear to be concerned with two regimes of fire exposure; small-scale tests which anticipate incipient fire exposures no greater than 500 W, and large-scale tests that use ignition sources of approximately 100 kW. In addition, the small-scale tests provide little, if any, energy feedback mechanism that may increase flame spread.

In order to determine the appropriateness of these various test methods, the data presented in the preceeding section will be used to describe several possible scenarios.

The incidence data can be classified into four categories based on the method of ignition: hot roller, stuck belt, electric arc, and fluid ignition. The first two involve the frictional generation of heat while the others are concerned with mechanical failures in adjacent machinery such as electrical faults in power lines or hydraulic failures in equipment.

3.1 Hot Roller

The first scenario considered is a hot roller failure. A hot roller on a conveyor system occurs when the bearings in the roller arm seize, jamming the normally freewheeling roller. Continued operation of the conveyor system results in frictional heating of the roller drum. The maximum temperature attained by the drum is a function of belt speed, tension, and load as well as the surface characteristics of the drum and belt. During prolonged operation of the system, the roller drum will attain a steady state temperature determined by a heat balance between convective heat losses to the surroundings and heat generation by the moving belt. As long as the conveyor system continues to operate, the belt will not absorb enough energy during each pass over the jammed roller to ignite. Considering the speeds at which these belt systems operate, the contact time of any section of belt with the hot roller drum is small compared with the time between encounters.

When the system is stopped, heat transfer from the roller raises the conveyor belt to its ignition temperature thereby initiating a small fire. It can be shown, however, that this is not a probable scenario. The rate of heat transfer from the roller to the conveyor belt is not high enough to offset the heat losses to the surrounding atmosphere.

The interaction of the conveyor belt and the drum can be treated in a semi-analytical manner (appendix B). Over very short time periods (several seconds) after the system is shut down, the initial contact temperature between the drum and belt can be approximated by assuming that the system is analogous to two semi-infinite solids. Table 4 is a tabulation of the interface contact temperature for a styrene butadiene rubber (SBR) conveyor belt for various roller drum temperatures.

A drum temperature of at least 425°C would be required to obtain a contact temperature of 350°C at the belt/drum interface. (Pyrolysis of PVC and SBR begin at approximately 200-250°C and 320-360°C, respectively [9]. The actual ignition temperature of a specific PVC or SBR conveyor belt cannot generally be predicted.) This temperature would persist for only a short period of time. The temperature across the drum and conveyor belt rapidly decreases, due to convective heat losses to the surrounding atmosphere. Typical calculated temperature profiles from the center of a drum to the outer surface of a conveyor belt are shown in figure 4 for 5 minutes and 30 minutes after shut-down.

It can be seen that, unless an exothermal reaction is initiated within the conveyor belt, it will not ignite. The temperature profiles indicate that ambient conditions are rapidly approached.

An alternative scenario that could lead to conveyor belt ignitions assumes that the hot roller ignites any coal, coal dust, or oil present instead of the belt. Self-heating studies [10,11] have shown that moderate elevations in environmental temperatures can cause coal to ignite. The continued operation of a belt system would provide more than sufficient energy to heat and hold a jammed roller at an elevated temperature until the surrounding coal dust ignites. Once again, as long as the system is in operation the intermittent encounters of the belt with the burning coal will not result in ignition of the belt. When the system is shut down, the resultant prolonged exposure to the flaming coal dust can result in the ignition of the conveyor belt. Such a scenario has been postulated to explain the Schlazel and Eisen Colliery disaster in Germany, October 1977 [12].

Table 4

Predicted Hot Roller Temperature and the Instantaneous Interface Contact Temperature for SBR Conveyor Belts

Drum Temperature (°C)	Interface Temperature (°C)
150	127
200	170
260	216
315	261
370	305
425	349
480	393
540	440

Figure 4 – Calculated temperature profile across a stationary roller in contact with a conveyor belt

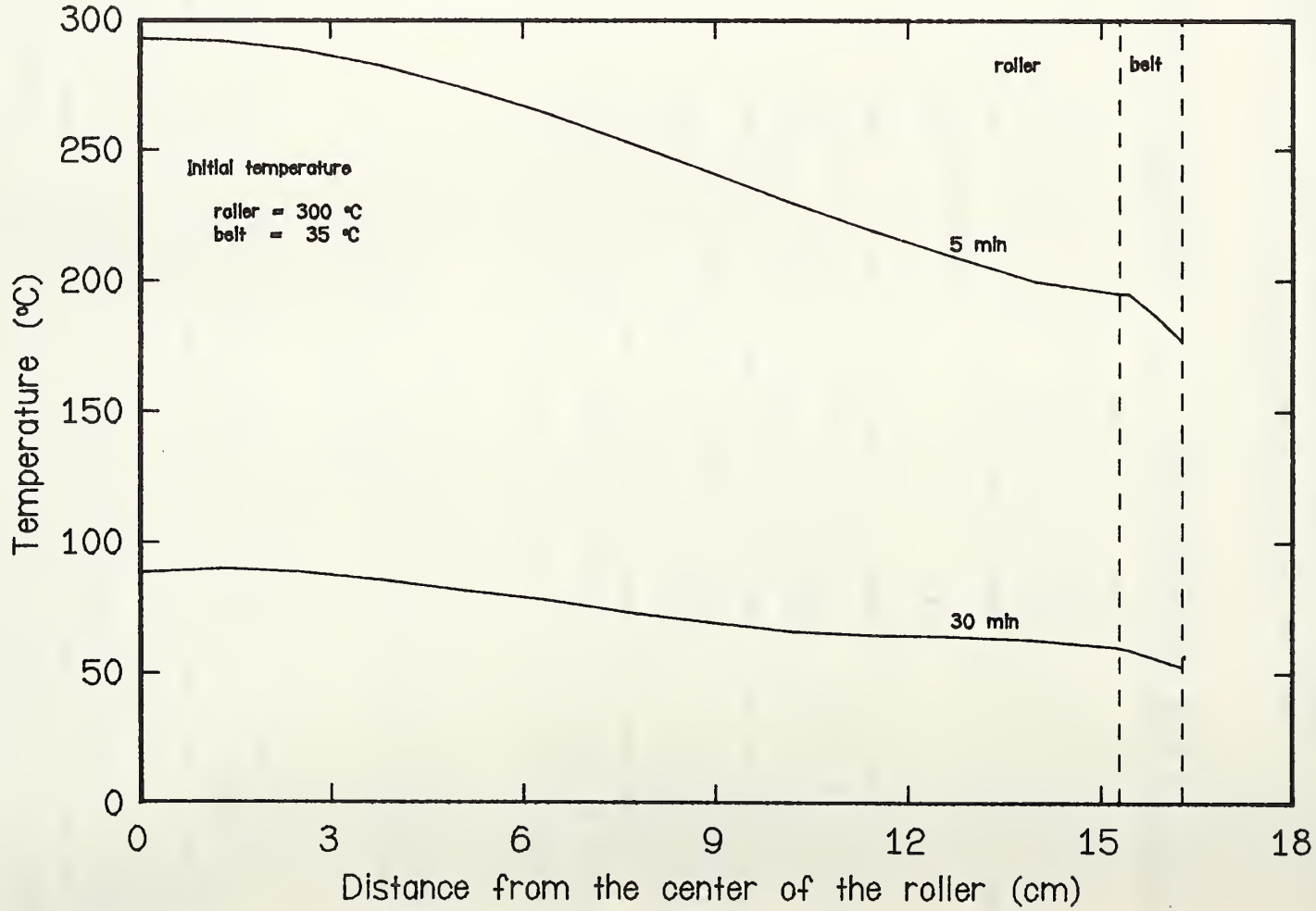

Fire growth on the conveyor belt is strongly dependent on the energy transfer from the ignition source as well as the feedback energy from the burning belt. There exists for each conveyor belt a minimum required exposure time at any given exposure intensity to develop a growth rate that is self-sustaining. Belts can ignite with exposure conditions as low as .35 W/cm^2 in approximately 2 hours (appendix D). Any increase in exposure intensity decreases the time to ignition. The rate of heat transfer and duration of exposure from the burning coal to the conveyor belt would have to be of this order of magnitude before it could be expected to ignite the belt.

3.2 Stuck Belt

Of the two frictional heating failure scenarios, the stuck belt appears to have been eliminated as a failure mechanism. This may be due to the introduction of "zero slip switches" and sequence switches that shut down conveyor operations when a discrepancy between drive speed and belt speed exists. Some countries (e.g., Britain, Canada, and Australia) have addressed this same problem by developing a drum friction test for belts.

Generally, a belt is stalled by a roof fault (cave-in), a failure in the sequence switches of a multibelt system, or loss of tension around the drive section. Without the "zero slip switch" or with a defective one, the drive drum continues to operate. Frictional heating of the belt begins immediately. Long-term operation of the drive with the belt in a stalled condition will result in either separation or ignition of the belt.

Ignition can occur at two locations. One possible point of ignition is the drum-belt interface prior to belt separation. This type of ignition would produce underside burning of the belt that could spread until a belt edge is reached. Continued fire growth may then take place on the upper surface of the belt.

Another possible location for ignition is the hot mass of material frictionally removed from the belt and deposited on the surface of the lower belt. The fire produced in this manner could also spread between the overhead and the return loops of the conveyor system. Since these two belt lines could be thought of as an idealized tunnel, the close proximity of the "roof" to the "fuel" source would tend to promote rapid and extensive flame spread. Recently, Factory Mutual Research Corporation has demonstrated the importance of roof-to-belt distance as a controlling mechanism for flame spread [13]. They found that, as the belt was moved towards the roof, flame spread was more extensive and rapid.

The British incident data appear to indicate that they still have a problem in controlling these types of incidents in spite of the fact that they employ a drum friction test for belt qualification.

3.3 Electric Arc

Sources for electrically induced ignitions are present throughout a coal mine. The majority of equipment in underground coal mines is electrically operated from various power sources, AC and DC, with voltages above 4KV not uncommon. In the belt area, voltages from 600 to 1,000 volts are common, with currents as high as 800 amperes. Electrical cables can be found suspended from the roof along haulage lines.

An electrical cable can be dislodged from its restraining hook by a minor roof fault or deterioration of the restraints. The cable could then make contact with the belt system and subsequent operation of the belt system would cause abrassive removal of the insulation until the conductors are exposed. If two conductors are exposed or the insulation is degraded to the extent that an arc can occur because of the potential difference between the conductors, one would expect the circuit breaker protecting this line to trip and remove the hazard. However, a low current arc could be produced that would not draw sufficient current to trip the circuit breaker. An arc established in this manner could persist indefinitely. This could represent a significant source of ignition energy for the conveyor belt assuming the gap did not increase. In an analogous manner, any arcing that occurs between the conveyor frame and exposed conductor could be a potential source of ignition energy.

How serious the problem is can be assessed by computing the magnitude of heat transfer from the arc to the belt surface. A simple analysis, appendix C, shows that ignition of the belt surface is possible provided the arc persists for several seconds and the conveyor belt is stationary. This would be the case if the arc were drawing less current than the breaker set point value. In heavy industrial applications this could be possible because breakers are designed to ignore start-up spikes. Several cycles of over-current are necessary before a circuit breaker would trip. The transition from initial sparking to arc is very rapid and, therefore, may not trip the breaker.

Prolonged exposure to an arc would not only ignite a conveyor belt but also provide additional external energy that would induce accelerated fire growth.

3.4 Fluid Ignition Sources

The most severe source of ignition by fluid combustion is expected to be a failure in an adjacent hydraulic system that forms a flaming spray. This "torch" could impinge on a belt. If the conveyor system is stationary, the flaming hydraulic fluid could ignite the belt. Measurements of energy release perpendicular to the spray axis has shown that significant amounts of energy are radiated (1.6 W/cm^2) [14] by a flaming spray of hydraulic fluid. Direct impingement of the flaming spray onto the conveyor belt would be even more intense.

Two exposure conditions arise with this type of failure. In the first exposure condition, the conveyor belt, in motion, is exposed to the spray. The normal speed of the belt is rapid enough that it passes through the flame without igniting. However, the relatively cold belt forces some of the unburned fluid to condense on its surface. This could cause additional problems with some other failure mode (i.e., hot roller). In addition, the flaming spray could ignite the coal seam or coal dust previously deposited by the conveyor system. The subsequent development of this type of fire could overshadow any fire performance properties of the belt.

The second exposure condition involves a stationary belt. It is shown in appendix D that it is possible to ignite a conveyor belt meeting MSHA (§18.65) requirements with a heat flux as low as .86 W/cm^2 in 4 to 10 minutes. Prolonged exposures at heat fluxes as low as .34 W/cm^2 could also result in ignition of a belt. Preliminary measurements of the heat flux [14] outside of the spray cone perpendicular to the spray axis show that it is possible to ignite some belts with a noncontacting spray if it persists for an hour. Direct contact with the flames should greatly reduce the exposure time necessary for ignition. Following ignition, fire growth could be rapid, because of the continued presence of the flaming spray. Under these conditions, the conveyor belt represents the means for spreading the fire and not the source of the initial ignition.

4. LARGE-SCALE TESTS

Several researchers have conducted large-scale fire tests, in an effort to clearly establish flammability differences between various grades of conveyor belts. These tests have provided some information on belt performance under "real end-use" conditions.

Early large-scale tests were performed by Mitchell, et al., in 1967 [15]. Using a 1.2 meter diameter corrugated steel duct, he exposed 4.6 meter long belts to a set of burners whose combined heat release rate was 74.2 kW. He showed that under steady state conditions, variations in the ventilation rate from neutral air to approximately 150 meters per minute increased the time to ignition. However, after ignition the rate of flame spread increased with increasing ventilation rate. Experiments with specimens preheated with an electrically heated steel plate indicated that while the flame spread rate was unaffected, the likelihood of establishing a propagating flame increased by the preheating.

Mitchell scaled up his work to a 3 meter wide by 2.1 meter high mine entry using a 30 meter long conveyor system. Employing a similar burner arrangement, he found that under comparable ventilation conditions, the rate of flame propagation was lower for the larger cross-sectional opening. He also noted that variations in belt width did not affect flame spread rate as it had in the smaller scale tests.

Similar tests conducted by Warner in 1974 [16] employed a 4.6 meter wide by 1.8 meter high corrugated steel simulated entry way as the test gallery. Although Warner used a 62 kW source, his results qualitatively agreed with Mitchell. The differences are probably due to the different geometric configuration employed by Warner. Mitchell's tests were conducted using a single belt run with ignition on the surface of the belt. Warner, on the other hand, designed his tests around an actual conveyor system. He had two belt layers and ignited the belt on the top surface of the lower layer. His effective ceiling height was the top belt layer and not the mine ceiling. While Mitchell's results were confined to new belts, Warner tested used belts as well. He found that new belts burned more readily than used belts of the same make and that the addition of coal and grease retarded ignition but enhanced flame propagation.

The effect of the ceiling on flame propagation was further explored by Buckley and Vincent [13] in a 1978 series of large-scale single layer belt tests. A 2.4 x 2.4 m (8 x 8 ft) gallery with a 23 m (75 ft) horizontal run was constructed of brick and contained a 7.6 m (25 ft) single layer length of belt on a steel frame. Tests were conducted using an ignition source with an energy release rate of 53 kW to 212 kW. They found that at the maximum energy release rate of 212 kW none of the belts would propagate a flame when the belt to ceiling distance was 1.8 meters. This series also included a nonfire-resistant rubber belt that required preheating and applications of coal dust and grease before it would propagate a flame at an ignitor setting of 106 kW.

Flame propagation occurred on several belts when the conveyor belt system was moved to a distance of .84 meters from the ceiling. Buckley and Vincent were able to rate belts according to flame propagation rate and destruction distance versus the energy release rate of the ignitor and exposure time. They also noted that carcass material did not appear to affect the belt's burning characteristics although a more systematic experimental design is necessary to verify this point.

Grumbrecht [17] also reported results of large-scale tests conducted in Germany and the subsequent development of a reduced size test for conveyor belts. His results do not differ greatly from the preceeding researchers. Differences in test results of the various researchers can probably be attributed to the use of extremely large ignition sources of different intensities and duration, as well as geometric factors associated with the tunnel and belt mounting techniques. Grumbrecht's work clearly shows that if the igniting fuel load is large enough, virtually any belt will ignite and propagate a flame.

5. SMALL-SCALE TESTS

Appendix D describes the result of small-scale tests performed at NBS on selected belt samples. The tests measured the ignition, flammability, and smoke generation characteristics of conveyor belts.

A piloted ignition test was assembled that exposed a small belt sample to a reasonably uniform heat flux field. It was found that, as the heat flux increased, the belt's time to ignition decreased. Under high heat flux exposures, little difference was noted in the ignition delay time between the belts tested. Under low intensity conditions, there was a large spread in ignition delay time. The large-scale belt tests demonstrated similar behavior. Under low exposure conditions, very few belts ignited and propagated a flame. But, as the feedback mechanism was enhanced (i.e., the belts were moved closer to the ceiling and the intensity of the source was increased), differences in belt performance became less distinct until conditions were such that all of the belts propagated a flame.

Buckley also noted that his optical smoke sensors indicated near 0% transmission shortly after the initiation of the test indicating large production of smoke. This was verified in the modified NBS Smoke Density Chamber under more controlled conditions.

While conveyor belts are troughed, their primary orientation is horizontal. Therefore, it was felt that as a measure of the belt's fire spread potential, the Flooring Radiant Panel would be a useful test. It was observed (see appendix D) that some belts that easily passed the MSHA test, exhibited marginal flame spread performance in the flooring radiant panel test.

6. ACCEPTANCE TEST - MSHA (CFR Title 30 §18.65)

Appendix E describes the work performed using the MSHA test for the flammability of conveyor belts. Various parameters of the test were varied to determine their effect on test results. Variations in such parameters as the gas used as the fuel, the exposure time, and flame height had very little impact on mean values of afterflame and afterglow time. However, variations in the airflow rate across the specimen produced significantly different results. Table 5 shows the changes in afterflame time as a function of the airflow rate for several selected belts. Belts with very short afterflame times at 91 MPM (300 FPM) had long afterflame times at reduced air velocity. Table 6 shows the effect of airflow acceleration on afterflame times. The more rapidly the speed approaches 91 MPM (300 FPM), the shorter the afterflame time. In effect, the very rapid application of airflow, as would be the case if a damper were employed, blows out the flame. The use of a larger orifice (1.9 mm) in the test burner also appeared to produce longer afterflame times than the smaller orifice 1.1 mm found in a natural gas burner.

As expected, afterglow was also affected by the airflow rate. The number of specimens exhibiting glowing behavior decreased with decreasing airflow rate.

It can be anticipated that those factors affecting lab to lab reproducibility will be:

- the manner of airflow application and
- the type of burner.

7. DISCUSSION

The Code of Federal Regulations requires that all underground conveyor belt systems be equipped with slippage and sequence switches as well as with automatic fire warning devices. Inspection of a belt must also be performed within 2 hours after a planned or unplanned shutdown. The examination is

Table 5

The Effect of Airflow Rate on Afterflame Time on Selected Conveyor Belts Tested in the MSHA Test (30:18.65) Using a Natural Gas Burner

Belt Number	Belt Type	Airflow Rate - Mpm			
		0 (sec)	30 (sec)	60 (sec)	90 (sec)
5	PVC	6	3	1	2
8	SBR	3	1	1	1
13	PVC	63	3	3	3
14	PVC	634	33	10	3
18	SBR	3	3	3	1
26	SBR	199	159	6	2
32	PVC	3	1	1	0
34	SBR	351	14	3	3
39	SBR	10	3	2	2
42	SBR	21	3	2	2
45	SBR	153	3	2	2

Table 6

The Effect of Air Blower Time to Steady-State Flow on the Afterflame Time of Selected Conveyor Belts Tested on the MSHA (30:18.65) Apparatus as a Function of Time to Steady-State Air Velocity

Belt Number	Belt Type	Acceleration Rate - Mpm^2			
		270 (sec)	365 (sec)	545 (sec)	2700 (sec)
13	PVC	12	7	8	3
14	PVC	162	163	51	3
26	SBR	82	116	72	3
34	SBR	111	145	46	3

primarily concerned with identifying sources of ignition such as hot rollers or incidental coal fires.

Fire suppression systems are also mandated by statutory provisions within the Code, however, the extent of coverage by a suppression system depends on the fire-resistant classification of the belt used in the haulage system. A belt classified as fire resistant, according to CFR Title 30:75.1101, need only have a suppression system covering 50 feet of the belt beginning at the belt drive unit. Nonfire-resistant belts require 150 feet of coverage.

It is apparent from a review of the accident data that the combined introduction and use of safety switches, suppression and detection systems, and fire standards for belting materials have reduced the frequency of reported conveyor belt fires.

This multilevel approach to fire safety, however, has masked the real impact of any single safety related element including the fire performance requirements imposed on the belt. (It was noted that the U.S. fire experience in this area of underground coal mine operations appears remarkable in contrast to the British data. However, as was pointed out earlier, the British require the reporting of all fire incidents while the U.S. reporting system ignores any fire that was extinguished within 30 minutes and caused no injuries.)

While it may appear unlikely, a failure in either the detection or suppression system could seriously reduce the margin of safety built into the overall system. The increase in the risk due to such a failure was clearly demonstrated in the large-scale tests conducted by Warner and Buckley. They have shown that under the appropriate geometric and thermal conditions an MSHA approved belt can propagate a fire.

The scenarios developed from the incidence data indicate that fires remote from the drive-end of a conveyor system could occur. These could be detected by the fire detection systems but they would not be within the range of the suppression system. Given all of this information, it can be concluded that the U.S. should be experiencing a high incidence of conveyor belt fires. The accident statistics indicate a counter trend. There has been no serious fire incident involving a conveyor belt in the past 10 years.

8. CONCLUSION

Coal mine fires involving conveyor belts were reviewed in order to develop a set of scenarios that describe the sequence of events leading to a serious fire loss. Large-scale tests were also reviewed. This review indicated that meeting the fire standards administered by MSHA does not guarantee acceptable fire performance if the fire detection or suppression system fails and a significantly large source of energy is present.

Small-scale tests indicated that for incidental fires, belt performance, as measured by MSHA (CFR 30 §18.65) appears to be adequate. However, large-scale tests show that with a significant increase in the ignition source the level of safety provided by the existing belt test is greatly reduced.

A quantitative evaluation of risk was not made because quantities such as the total number of nonreportable fires, the frequency of operation of the suppression system and the fire fighting capabilities of the miners could not be assessed. However, the decrease in the number of reported incidents could be taken as an indication of the effectiveness of the overall system.

9. RECOMMENDATIONS

Assuming the current effectiveness of the detection and suppression system and that sequence switches and zero slip switches are properly maintained, the current fire performance requirements for conveyor belts appear to be adequate.

However, in order to improve reproducibility of the test method, it is recommended that the MSHA test procedure (§18.65) be modified to:

- require that the airflow not be applied until the afterflame has extinguished and

- clearly define the use of an artificial gas burner with a 1.9 mm orifice.

Appendix F is a modified test procedure that should improve repeatability and reproducibility.

In addition, in order to assess the effectiveness of fire safety measures, HSAC should change its requirements for a reportable fire incident

to include any incident that exhibited fire or smoke regardless of extinguishment time or occurrence of injury.

10. ACKNOWLEDGMENTS

This work was partially funded by the Mine Safety and Health Administration, U.S. Department of Labor, and the U.S. Bureau of Mines, U.S. Department of Interior.

11. REFERENCES

[1] Federal Coal Mine Health and Safety Act of 1969, Public Law 91-173, December 30, 1969.

[2] Federal Mine Safety and Health Amendments Act of 1977, Public Law 95-164, November 9, 1977.

[3] U.S. Code of Federal Regulations Title 30, Chapter 1, Part 18, Paragraph 18.65, 1978.

[4] Jamison, W. B., Lee Engineering, Private communication.

[5] McDonald, L. B., An Annotated Bibliography of Coal Mine Fire Reports, Allen Corporation of America, Final Report, U.S. Bur. Mines Contract No. J0275008 (February 1979).

[6] Wanchek, G. A., Summary of Underground Coal Mine Conveyor Belt Fires, 1960 to 1970 and 1970 through 1977, draft report, Mine Safety and Health Administration, U.S. Department of Labor.

[7] Department of Trade and Industries, Report of H. M. Chief Inspector of Mines and Quarries for 1972, Her Majesty's Stationery Office, London, England (1973).

[8] Health and Safety Executive, Mines and Quarries, 1975, Her Majesty's Stationery Office, London, England (1976).

[9] Madorsky, S. L., Thermal Degradation of Organic Polymers, Interscience Publishers, John Wiley & Sons, Incorporated, New York (1964).

[10] Mitchell, G., NBS, Private communication.

[11] National Coal Board, Report of the Committee on Roadway Conveyors, Her Majesty's Stationery Office, London, England (October 1955).

[12] Mines Inspectorate, Nordrhein-Westfalen, Report on the Mine Disaster at the Schlagel and Eisen Colliery in Hecten, Recklinghausen on October 27, 1977, Dortmund, West Germany (March 1978).

[13] Buckley, J. L. and Vincent, B. G., Conveyor Belt Testing Program, U.S. Bureau of Mines, Contract No. H0252085, Final Report (1978).

[14] Loftus, J. J., NBS, Private communication.

[15] Mitchell, D. W., Murphy, E. M., Smith, A. F., and Polack, S. P., Fire Hazard of Conveyor Belts, U.S. Bureau of Mines, RI 7053 (1967).

[16] Warner, B. L., Suppression of Fires on Underground Coal Mine Conveyor Belts, Walter Kidde and Company, Incorporated, U.S. Bureau of Mines, Contract No. H0122086, Final Report, NTIS PB-250 368 (September 1974).

[17] Grumbrecht, K., Flammability of Conveyor Belts, Gluckauf-Forschungshefte, Vol. 37, No. 4 (August 1976).

[18] Wilde, D. G., A Review of Test Methods for Fire-Resistant Conveyor Belts, International Symposium, Fire Safety of Combustible Materials, University of Edinburgh, England (October 1975).

APPENDIX A

Review of Qualification Tests for Conveyor Belts in Coal Mines

This report represents a review of test procedures and methods used by various international organizations to assess the fire hazards of conveyor belts. The test methods and acceptance criteria from eight countries, including the U.S.A. and International Standards Organization (ISO), are critically reviewed (see table 1).

1. TEST METHODS

The various test methods currently in use to evaluate the flammability characteristics of conveyor belts for underground mine application can be divided into two groups. The first category of tests measures the belt's resistance to frictional heating, while the second group measures the belt's ability to limit flame spread when exposed to a standard heat source for a predetermined period of time.

1.1 Drum Friction Test

Drum friction testing of conveyor belts represents part of the qualification testing programs of several countries. There are three basic test procedures currently in use: South Africa [1], Poland [2], and the National Coal Board [3] in England. Until the late 1950s, the United States [4] also employed a drum friction test for belt qualification similar to the Polish test procedure. In addition, the European Community Countries (ECC) [5] are currently attempting to standardize the frictional heating test for application to all ECC coal mines. Table 2 is a summary of the four test procedures. A review of table 2 shows that, allowing for metric to English conversions, the U.S. Bureau of Mines and South African tests are virtually identical. They differ primarily with regard to the acceptance criteria and the number of specimens tested.

Both standards require that the belts do not exhibit any flaming or glowing during the 2-hour test period. If any flaming or glowing is noted, the belts are rejected. The Bureau of Mines had a further stipulation that the friction drum itself not achieve a temperature in excess of 250°C. If this temperature was reached, the belt was also rejected. (MSHA no longer applies this test for belt qualifications.)

Table 1. List of countries and the type of test procedures applied to coal mine conveyor belts

Country	Test Method		
	Small-Scale	Large-Scale	Drum Friction
Belgium		X	
France	X[a]		
Germany	X[b]	X	
Great Britain	X[b]	X	X
Israel	X[a]		
Netherlands			X
South Africa	X[a]		
United States	X		

[a] Adopted ISO R340.

[b] Similar, but not identical, to ISO R340.

Table 2. Specifications of various drum friction tests

Specifications	European Community Countries		South Africa		National Coal Board		U.S. Bureau of Mines	
Specimen Size (WxL)	150mm x 1M		225mm x 15M		152mm x 4.6M		229mm x 1.5M	
Number of Specimens Tested	6		2		2		1	
Drum Size (DIA)	Steel - 210mm		Steel - 450mm		Steel - 203mm		Steel - 457mm	
Initial Drum Temperature	<30° C		---		---		---	
Drum RPM	190		110		190		110	
Air Velocity	120M/min		90M/min		152M/min		91M/min	
Minimum Initial Air Temperature	5° C		---		---		---	
Maximum Ventilation Rate of Test Room	<30M/min		---		---		---	
Total Load on Belt	Kg	min	Kg	min	Kg	min	Kg	min
	35	60	22.5	15	32	120	22.5	15
	70	30	34	15	68	10	34	15
	105	30	45.5	15	105	10	45.5	15
	140	10	59.5	15	141	10	59.5	15
	175	Fails	75.5	15	177	Fails	75.5	15
			91.5	15			91.5	15
			107.5	15			107.5	15
			123.5	15			123.5	15
Acceptance Criteria	No Flame or Glow		No Flame or Glow		1) No Flame or Glow 2) Max. Drum Temp. <300° C		1) No Flame or Glow 2) Max. Drum Temp. <250° C	
Comments	Test 3 w/air 3 w/o air		Reverse Specimen Surface		Test 1 w/air 1 w/o air			

The Bureau of Mines tests rely on single sample testing for belt qualification. The South African test procedure also uses single sample testing, but the test procedure requires that a belt be tested with both surfaces in contact with the friction drum. This results in two test specimens per sample.

All of the other drum friction tests are based on the ECC test (see table 2). This test differs in almost every aspect with the previous two tests. The specimen size is smaller, and the friction drum is smaller and operates at a higher speed. The initial belt loading is higher by nearly 13 kg and a total of six specimens are tested per sample. However, the most important difference is that belts are tested until they mechanically fail. Throughout this test period, none of the specimens can exhibit any signs of flaming or glowing. All of the tests specify an air jet to be applied to the friction drum during the entire test period. Several of the test procedures require testing with and without air.

1.2 Flame Test

There are five different types of flame test standards applicable to conveyor belts that are used in coal mines (see table 3). Three standards are based on small-scale tests, while the remaining two tests can be classified as large-scale tests. This distinction is based, primarily, on specimen size and burner energy output.

The three small-scale tests subject a specimen, 25 mm wide by 200-300 mm long to a small ignition source (less than 500 watts); either a spirit burner or a bunsen burner. While specimen orientation (i.e., the direction of longitudinal axis) is different for the ISO test, the major difference between these tests can be found in the post exposure period. Immediately upon the removal of the burner, the test administered by MSHA [6] applies an airflow of 1.5 mps parallel to the specimen surface in the direction of flame spread. ISO and the German tests apply an airflow perpendicular to the flame spread axis with a vertically oriented specimen. This is done 60 seconds after the removal of the flame. The purpose of this is to determine if the additional air movement would tend to drive the belt into continued glowing or flaming. A minor difference also occurs in the actual exposure time. MSHA requires that the specimen be exposed to the bunsen burner for 1 minute. The exposure times found in the ISO test, 340 [7], and the British Standard, 3289 [8], are 45 and 30 seconds, respectively. While the actual acceptance criteria for each test differs in absolute terms, they all require that flaming and glowing to cease before a given time limit.

Table 3. Flame test for conveyor belt qualification for underground coal mines

Test Method / Specifications	ISO-R340 Germany DIN 22 103	British BS 3289	MSHA 30 CFR Part 18	ECC Propane Grill Test	Germany DIN 22 118
Specimen Size (WxL)	25mm x 200mm	25mm x 305mm	13mm x 152mm	"Normal" x 4M	90mm x 1.2M
Number of Specimens Tested	12		4	2	1
Specimen Orientation (Longest Axis)	Vertical	Horizontal	Horizontal	Horizontal	Horizontal
Burner Type	Spirit Burner	Barthel-Spirit Burner	Bunsen Burner	450mm Sq. Frame 52 Jet	Franke Bunner (Similar to Mekker)
Fuel	95% Ethanol 5% Methanol	90% Propane 10% Propene	95% Ethanol	Propane	Natural Gas
Flame Length	150-180mm	152mm	76mm	(.13 Kg/min)*	10mm
Exposure Time	45 sec.	30 sec.	60 sec.	10 min.	15 min.
Specimen Distance Above Burner	50mm	51mm	25.4mm	130mm	40mm
Chamber Airflow Rate	1.5 M/s (60 sec. After Exposure)		1.5 M/s (After Test Exposure)	1.5 M/s (After Test Exposure)	.5 M/s (During Test Exposure
Direction of Airflow	Normal to Flame Spread		Parallel to Flame Spread	Parallel to Flame Spread	Parallel to Flame Spread
Acceptance Criteria	Afterflame Time: <45 sec. Avg. <15 sec. Each	Afterflame and Glow: <3 sec.	Afterflame: <1 min. Afterglow: <3 min.	Self-Extinguish With a Portion of Sample Intact Across Entire Width	Self-Extinguish With a 40cm Section to Remain Intact

* Specifies mass consumption rate rather than flame length.

The two large-scale tests listed in table 3 are vastly different from the previous three tests. This is true for specimen size, exposure conditions, and acceptance criteria. The propane grill test, being considered by ECC [5] and the British [9], employs a rather large burner configuration releasing approximately 99.7 kw of energy. The specimen in this test is also large in comparison to the previous set of tests, the normal full width of the conveyor belt by 4 m long. The Germans [10] also have a large-scale test that uses a large Mekker type burner. Specimen size is 90 mm wide by 1.2 m long. Test exposure time is 10 minutes for the ECC test and 15 minutes for the German test. In both cases, the acceptance criterion requires that a minimum portion of the test specimen remain intact at the completion of the test (see table 3).

2. FIRE SCENARIOS AS RELATED TO A TEST METHOD

All safety standards are promulgated on the premise that their enforcement would significantly improve safety in the end use environment. This is even more nearly valid for fire safety standards, since their implementation is designed to reduce the likelihood of a given set of circumstances from resulting in a fire loss. Fire safety standards require the use of materials or designs that intervene into the flow of events that begin with the initial failure of a product and end with an injury or financial loss due to fire. An analysis of the current set of test methods for conveyor belts aimed at deducing the initial design considerations (i.e., scenario) that led to their development would be helpful, if for no other reason, than to allow us to question their suitability to function as an indicator of fire safety in today's world.

2.1 Small-Scale Fire Tests - Scenarios

Consider first the small-scale fire tests described above. What does it mean if a conveyor belt passes one of these tests? In order to answer that question, one has to realize that the probability for a conveyor belt failure depends on the nature of the ignition source (i.e., the rate of energy release and the total exposure time) as well as on the thermal characteristics of a given conveyor belt and the geometric relationships between the belt and the environment.

In the various small-scale test procedures, the ignition source is defined by stipulating the fuel, the fuel delivery rate (i.e., flame height, flame surface area, and burner bore size), and the total exposure time. By means of the acceptance criterion, materials are qualified for the intended end use. It is

clear that the anticipated ignition source was thought of as being small with an energy release rate on the order of 500 watts or less. Furthermore, from the test procedure, it can be seen that the ignition source was intended to have little or no influence on the development of a flame front along the conveyor belt specimen. Observations are made for a predetermined time, after the removal of the burner, to ascertain the likelihood of self-sustained burning and/or glowing on the test specimen.

A basic assumption underlying all of these test procedures and, therefore, the scenario, is that the conveyor system remains stationary during the critical time that the thermal energy impinges on the belt. Only one of these small-scale tests considers the impact of starting up the conveyor system following the input of thermal energy--that is MSHA's test described in the Code of Federal Regulations (30:18.65).

Following the low-level ignition of a conveyor belt, the observations made during the test seem to relate to three possible outcomes, if self-sustained combustion occurs on the conveyor belt, either flaming or smoldering. The possible hazards resulting from this are:

- that the persistent flames or glowing will ignite explosive gas mixtures that may be found in coal mine operations,

- that the burning conveyor belt will spread the combustion process to the surrounding coal, or

- that the burning conveyor belt alone represents a hazard to the individuals working in a coal mine.

In the latter case, the hazard may be exposure either to the flames or, more likely, to smoke.

A possible scenario that would correlate with the operational conditions defined in the test procedures requires that a small ignition source appear. This could be the result of a smoldering piece of coal on the conveyor belt, a jammed roller igniting coal dust and grease, or an electric failure that produces a short duration arc. Smoldering coal releases approximately 3.6 watts of thermal energy [11] for a lump of about 400 gm. A smoldering lump on a belt would only transfer a fraction of this energy into the conveyor belt, but smoldering could spread to other pieces of coal.

A jammed roller that produces enough energy to cause frictional ignition of trapped coal dust and grease represents a very real threat of ignition of the conveyor belt. It is not readily possible to determine the energy release rates of a coal dust and grease mixture.

A short duration arc represents another possible low-level ignition source. However, for the arc to be of significant consideration, it must persist for several minutes, which, in the mine environment, is certainly possible. Experiments have shown that a low current, high voltage arc transfers energy to a horizontal surface at an average rate of approximately 2-3 watts [12]. Mine operations require high currents to run most of the equipment at voltages below 1 kv. Under comparable conditions, high current arcs should produce several times the energy release rate of the low current arc. However, the size of the initial gap would have to be smaller before the arc could establish itself.

Once the exposure time has ended a finite observational period begins. In the MSHA test, this is augmented by the introduction of an air current. This appears to be intended to measure the belt's ability to glow or reignite assuming that self-sustained burning has not developed during the exposure time. Taking this test condition into account modifies the assumed scenario for we are no longer limiting the hazardous condition to the vicinity of the ignition source but are attempting to limit the impact of a burning belt to other areas of the mine as the conveyor system is started up and moved through the shaft.

2.2 Large-Scale Tests - Scenarios

It should now be clear that an adequate definition of the ignition source is required. Its size determines the extent to which energy feedback from the surrounding surfaces must be considered. One of the implied assumptions of the small-scale tests is related to the incidental nature of the ignition source. The opposite assumption can be drawn from the test procedures of the large-scale tests. No large-scale test is currently used in the United States; however, Great Britain and Germany use a large-scale test whose ignition source releases approximately 100 kw of thermal energy. This represents a 200 fold increase over the small-scale tests. This rate of energy release continues for 10 to 15 minutes instead of 1 minute or less for the small-scale tests. This means that the interaction between the burning conveyor belt and chamber walls and ceiling must be considered in developing a scenario. Although we are not in a position to compare results from various test methods, the extent of energy feedback will affect efforts towards correlating various test methods (13, 14, 15, 16).

The criteria of both large-scale tests are, in essence, identical. They require that at the end of the test period the conveyor belt self-extinguish and leave a section of the belt undamaged.

Consider, for example, a large drum of solvent on fire. Assuming that the belt becomes ignited from this source, flame propagation along the conveyor belt is dependent upon the relationship between the conveyor belt, source location, draft size, size of burning pool (i.e., energy release rate), and airflow conditions. The extent of flame spread is controlled by the total energy incident on the unburned portion of the conveyor belt. In this case, the total incident energy is the sum of the energy released by the burning pool incident on the belt and the energy feedback from the combustion of the belt. As the pool diminishes in intensity or the flame front propagates further from the burning pool, the pool fire represents less of a driving force. Continued burning of the conveyor belt becomes more dependent on energy feedback. If the energy feedback from the surroundings falls below a minimum level that is dependent on the type of belt, the geometry of the mine, and the presence of flame-retardant additives, the belt will self-extinguish.

The large-scale tests described above define an ignition source in terms of energy release and duration. The shaft cross sectional area is defined as well as the initial airflow conditions. The correlation of test performance and end-use performance relies on the realistic assessment of the strength and duration of a probable real fire. For similar geometric conditions, the large-scale tests establish a baseline for hazardous ignition sources. They would eliminate or greatly reduce extensive flame propagation from ignition sources below the energy release and duration levels of the tests. To carry this one step further, however, the importance of energy feedback cannot be over emphasized once ignition has occurred, the actual energy input into a conveyor belt may be higher than one would assume from an analysis of the ignition source alone.

2.3 Drum Friction Testing - Scenarios

Of the three types of flammability tests applied to conveyor belts, the drum friction test is the simplest for which to develop a set of conditions that describe the mode of failure. The drum friction test simulates frictional heating of the conveyor belt due to a stalled belt caused by a roof fault or loss of tension. It is not clear why all of the test methods apply an airstream aimed at the drum. Perhaps this is an effort to duplicate the airflow characteristics found in some sections of a mine's haulage system. However, at least for U.S. mines, portions of the haulage system are defined

as neutral air (i.e., no forced airflow). Under these conditions, the externally applied airstream unnaturally lowers the operating temperature of the drum, but does increase the likelihood of observing afterglow.

The drum friction test method is no longer used in the United States for conveyor belt qualification. This may be because of the introduction of a "zero-slip" switch that shuts the system down if the belt stalls while the drive is still applied.

3. DISCUSSION OF TEST PARAMETERS

The basic question that must always be addressed relates to the appropriateness of a given test procedure. A test method is appropriate if it measures a parameter known to relate to the hazard. Parameters that have been used in other fire tests and might be used for conveyor belts are:

- self-sustained burning;
- ease of ignition;
- rate of heat release;
- critical radiant flux;
- smoke generation;
- toxicity of combustion products.

Clearly, the current set of flame tests for conveyor belts addresses only one aspect of fire performance characteristics, self-sustained burning. (The drum friction test measures an ignition characteristic under one given form of energy input.) While self-sustained burning is recognized as an important parameter, it must be realized that the probability of such performance for a given conveyor belt is a function of the characteristics of the ignition source and the operational environment as well as the properties of the conveyor belt.

While measurements of all the parameters may not be valid for each application, perhaps one or another may prove to be more flexible than the current test method. Most of the items on the list are self-explanatory. However, critical radiant flux is a relatively new test concept. The basic idea is that one is able to determine the minimum level of feedback energy necessary to sustain a flame across the surface of a specimen. This is accomplished by applying a varying radiant flux field to the specimen and observing the extent of flame spread. This method would allow the acceptance criterion to be established according to a well defined scenario. In addition, as the

scenarios are redefined, the acceptance criterion could be adjusted (within the limits of currently available equipment).

4. SUMMARY

In addition to the Mine Safety and Health Administration's test method for conveyor belts used in underground coal mines, several international tests were reviewed. The differences between large-scale and small-scale tests were discussed in relation to the development of scenarios applicable to coal mine fires that spread along a conveyor belt.

Only the drum friction test assumed that the conveyor belt was the first item to ignite, while the flame tests presupposed the existence of an external source.

A short discussion of alternative measurement parameters was presented.

5. REFERENCES

[1] South African Bureau of Standards, "Safety Requirements for Conveyor Belting," SABS 971-1971.

[2] Polish National Standards Committee, "Fire Tests for Underground Conveyor Belting," PN-76 G-04030.

[3] National Coal Board, "Fire-Resistant Conveyor Belting," Number 158/1971, Part 7.

[4] Bureau of Mines, Department of the Interior, "Mechanical Equipment for Mines," Center for Fire Research, Title 30, Schedule 28, Part 34 (1957).

[5] Mine Safety and Health Administration, "First Report on Tests and Criteria of Flammability of Conveyor Belts," Appendix I (1974).

[6] Code of Federal Regulations, Title 30, Schedule 2G, Part 18 (1977).

[7] International Organization for Standardization, "Flame Resistance of Conveyor Belts--Specifications and Method of Test," ISO R340 (September 1973).

[8] British Standards Institution, "Specification for Conveyor Belting for Underground Use in Coal Mines," B.S. 3289 (1960).

[9] National Coal Board, "Method of Test for Fire Resistance of Conveyor Belting--Propane Burner Test" (1975).

[10] German Standards, "Conveyor Belts With Textile Plies for Coal Mining Underground, Burning Characteristics and Test Methodology," DIN 22 118.

[11] Iki, S. and Higuchi, K., "Spontaneous Combustion of Powered Coal," J. Ofc. Faculty of Engineering, University of Tokyo, Series 9, pp. 56-57 (1971).

[12] Peacock, R. D., NBS, personal communication.

[13] Denyes, W. and Quintiere, J. G., Experimental and Analytical Studies of Floor Covering Flammability With a Model Corridor, Nat. Bur. Stand. (U.S.), NBSIR 73-199 (1973).

[14] Quintiere, J. G., A Characterization and Analysis of NBS Corridor Fire Experiments in Order to Evaluate the Behavior and Performance of Floor Covering Materials, Nat. Bur. Stand. (U.S.), NBSIR 75-691 (1975).

[15] Quintiere, J. G. and Bromberg, K., Calculations of Radiant Heat Flux in the Proposed Floor Covering Flame Spread Test Apparatus, Nat. Bur. Stand. (U.S.), NBSIR 75-706 (1975).

[16] Buckley, J. L. and Vincent, B. G., Conveyor Belt Testing Program, U.S. Bureau of Mines, Contract No. M0252085, Final Report (1978).

APPENDIX B

Computation of Temperature Profile for the Hot Roller Scenario

The thermal interaction of a conveyor belt with a jammed roller arm is analyzed by dividing the problem into three distinct parts. The initial part is concerned with the contact temperature at the interface between the steel roller and the belt shortly after the conveyor system is halted. The second concerns the thermal behavior of the steel roller long after the system is halted. The third part uses the steel roller surface temperature as a boundary condition for the calculation of the temperature profile across the thickness of the belt.

1. CONTACT TEMPERATURE

A jammed roller is frictionally heated by the moving belt. The roller's temperature rises until a steady state condition is established at a given temperature, t_{ri}, constant throughout the roller. This temperature is determined by the balance between the energy into the steel roller, which is a function of the tension, load, and surface characteristics of the belt and roller, and the heat losses from the steel roller to the surrounding environment. The contact time of any portion of the belt with the jammed roller is very short and, therefore, its temperature is also given by a steady state temperature, t_{bi}. This value is determined by all the frictional forces along the entire system and concurrent heat losses.

For a very short time after the conveyor system stops operating, the hot jammed roller and that portion of the conveyor belt in contact with the roller will act as semi-infinite solids. If it is assumed that there is no contact resistance between the roller and the belt, each will instantaneously come to some intermediate contact temperature at the interface. Myers [1] has solved a similar analytical model and has shown that the contact temperature, t_c, is:

$$t_c = \frac{t_{ri}\sqrt{(Kpc)_r} + t_{bi}\sqrt{(Kpc)_b}}{\sqrt{(Kpc)_r} + \sqrt{(Kpc)_b}}$$

where

t_{ri} = Initial temperature of the roller.

t_{bi} = Initial temperature of the belt.

$(Kpc)_r$ = Thermal inertia of the roller.

$(Kpc)_b$ = Thermal inertia of the belt.

K, p, and c are the thermal conductivity, density, and specific heat, respectively. Typical values for the thermal inertia of the roller and belt are used--1463 $J^2/sec\text{-}cm^4\text{-}C^2$ [2] and 89 $J^2/sec\text{-}cm^4\text{-}C^2$ [3]. The results of this computation are shown in table 1 for various initial roller temperatures, t_{ri}, and an initial belt temperature, t_{bi}, of 38°C.

2. TRANSIENT ROLLER TEMPERATURE

With the conveyor system idle, the belt no longer frictionally heats the roller. The roller begins to lose thermal energy to its surroundings. Since only a small arc of the roller surface area is in contact with a small section of belt, the predominant mode of heat transfer from the roller is via convection to the atmosphere. It will be assumed that the presence of the belt, therefore, does not significantly modify the roller's thermal behavior. Furthermore, the tables presented by Welty [2] for the transient case for a long finite cylinder have been used. From these generalized tables, the surface temperature of the roller was calculated (see figure 1). Each curve represents the surface temperature of the roller assuming a different initial steady state temperature.

3. TRANSIENT TEMPERATURE PROFILE FOR A BELT

A one-dimensional model of a conveyor belt will be assumed. The surface temperatures for the roller shown in figure 1 will be used as the boundary transient contact temperature for one face of the belt. This will yield somewhat higher temperatures across the belt thickness. To insure that the model does not underestimate the predicted temperatures, the opposite face of the belt will be assumed to be insulated rather than incorporating a convective heat transfer. This assumption may, in fact, not be to far removed from reality, if a layer of coal is assumed to be present on the belt opposite the contact point of the belt and roller. For this case Myers [1] provides a series solution for the temperature distribution as a function of time. The equation in nondimensional terms is:

Table 1. Hot roller temperature and the instantaneous interface contact temperature for a conveyor belt initially at 38°C

Drum Temperature (°C)	Interface Temperature (°C)
150	127
200	170
260	216
315	261
370	305
425	349
480	393
540	440

Figure 1 – Calculated transient surface temperature for a steel cylinder at four initial temperatures

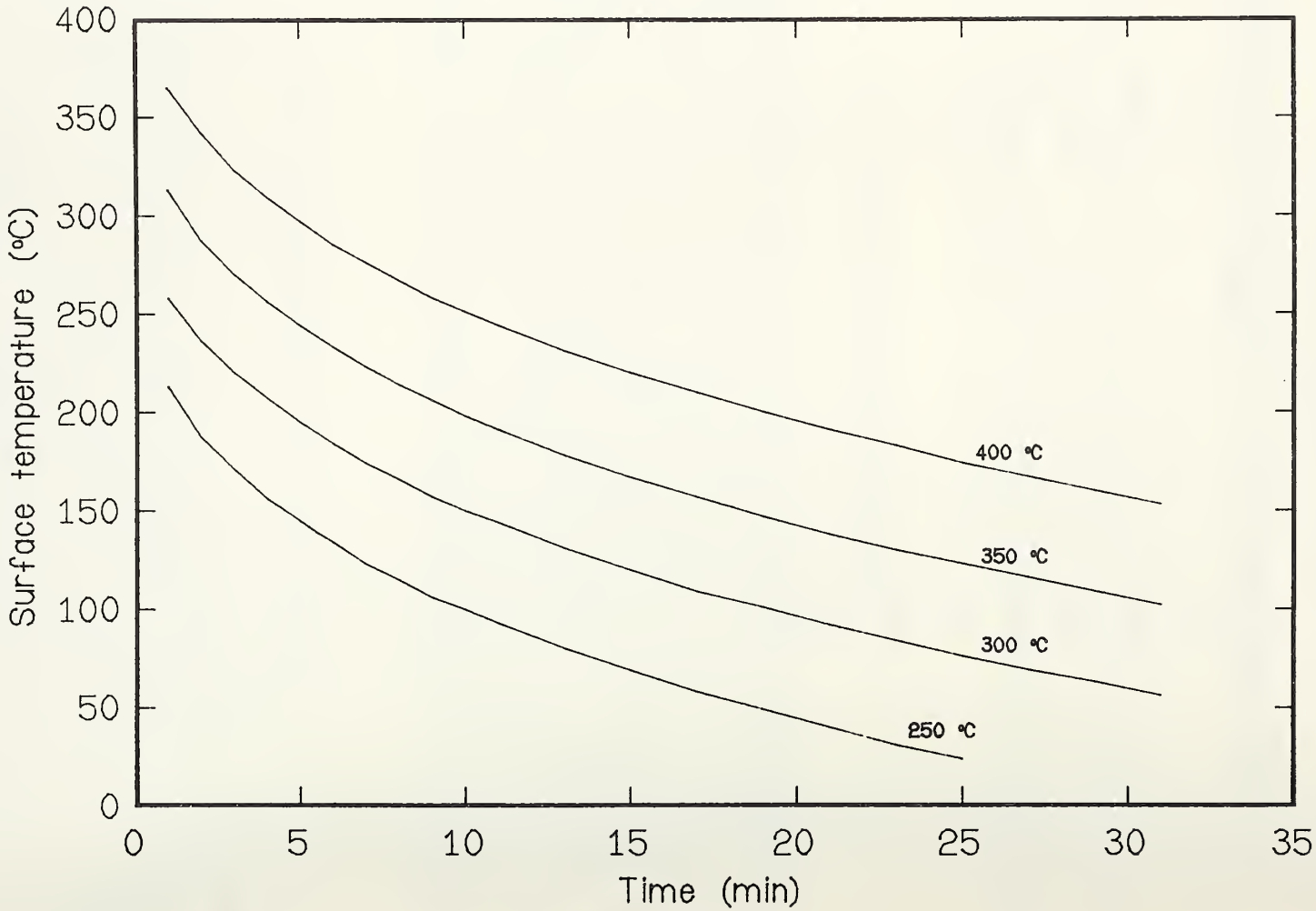

$$t(X,\theta) = \pi e^{-\theta} \sum_n \frac{P(X)_n}{Qn-1} - \pi \sum_n \frac{P(X)_n}{Qn-1} e^{-Qn\theta}$$

where

t = Temperature, nondimensional, as a function of time and position.

$Q_n = (2n+1)^2\pi^2/4.$

$P(X)_n = (2n+1)\sin[(2n+1)\pi X/2].$

The nondimensional time θ is defined as $\frac{\alpha T}{L^2}$, where α is the thermal diffusivity, T is time, and L is the thickness of the sample in cgs units. This equation was evaluated using a computer for the numerical calculations. The results of the calculation for two cases of initial drum temperature are shown in figure 2 in dimensional terms.

4. CONCLUSIONS

It has been shown that the difference between drum temperature and interface contact temperature increases with increasing drum temperature. At a drum temperature of 150°C, the interface temperature lags by 23°C, while at a drum temperature of 540°C, the interface temperature is 440°C, a difference of 100°C.

The calculations show that surface drum temperatures decrease approximately 100°C within 5 minutes of the removal of a heat source.

Drum and belt interface temperatures are a reasonable approximation of the belt's cross-sectional temperature.

5. REFERENCES

[1] Myers, G. E., Analytical Methods in Conduction Heat Transfer, McGraw-Hill Book Company, New York (1971).

[2] Welty, J. R., Engineering Heat Transfer, John Wiley and Sons, New York (1974).

[3] Ho, C. Y., Desai, P. D., Wu, K. Y., Havill, T. H., and Lee, T. Y., Thermophysical Properties of Polystyrene and Poly(Vinyl Chloride), NBS-GCR-77-83 (March 1977).

Figure 2 – Calculated transient temperature profile of a conveyor belt exposed to a time dependent surface temperature

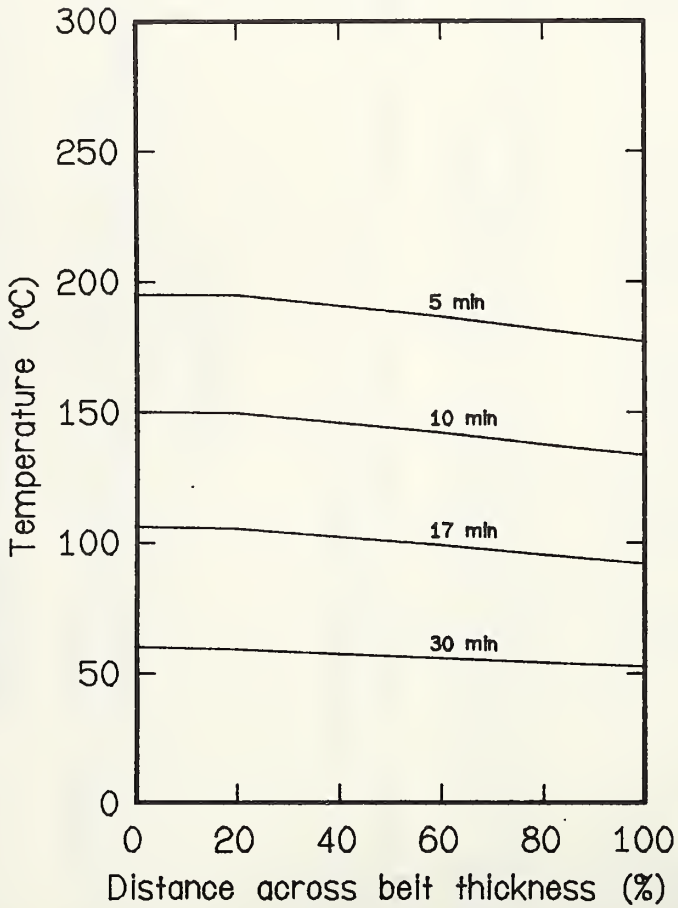

Initial drum temperature of 300 °C

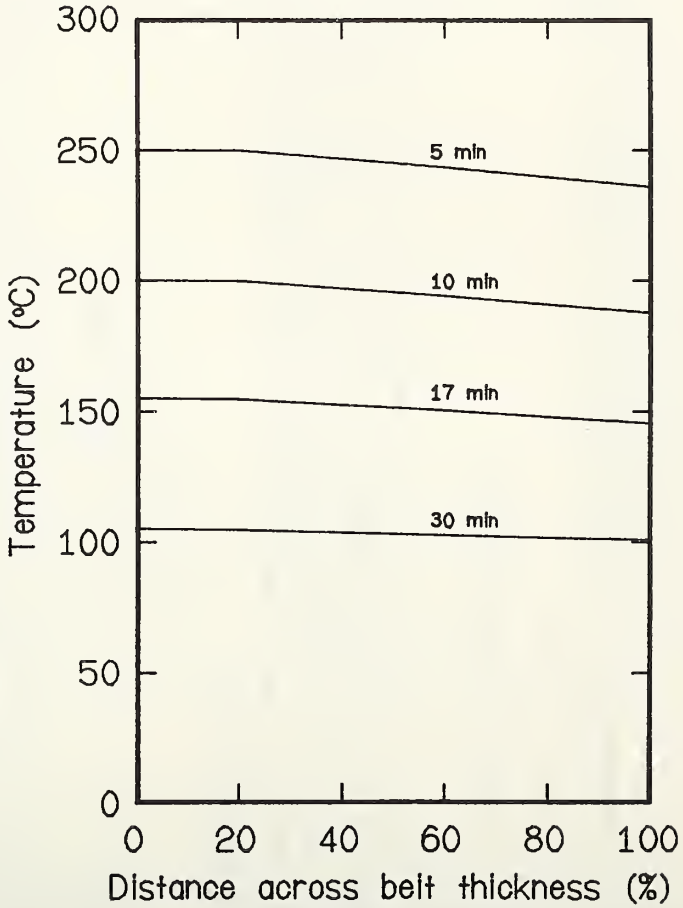

Initial drum temperature of 350 °C

APPENDIX C

Heat Transfer Calculations for an Electric Arc Near a Conveyor Belt

An electric arc is a self-sustained discharge having a low voltage drop and capable of supporting large currents. The arc is established either by the separation of contacts or by a transition from a higher voltage discharge. At atmospheric pressure, an arc is characterized by a small intensely brilliant core surrounded by a cooler region of glowing gases. The electrodes are at the boiling temperature of the electrode material, while the gas temperature in the core region is approximately 7000°C [1]. (The boiling temperatures of copper and aluminum electrodes in air are approximately 1900°C and 3100°C, respectively.)

An estimate of the heat transferred to a conveyor belt in close proximity to an arc is approximated by assuming that heat is transferred only via radiation. Both the arc and the conveyor belt are assumed to have an emissivity of 1 and that the arc is assumed to be an opaque sphere. In addition the exposure is assumed to be in the center of the belt and edge effects are, therefore, ignored. This simplified problem yields an upper value on the rate of energy transferred to the conveyor belt.

Figure 1 is a simplified description of a spherical source, an arc, and a plane substrate, a conveyor belt. The relevant parameters are shown. They are:

1. r_1, the radius of the arc core.
2. r_2, the radius of that portion of the conveyor directly below the arc.
3. h, the distance between the center of the arc and the conveyor belt.

The rate of heat transfer is computed by:

$$Q = F\ A_1\ \sigma \left(T_1^4 - T_2^4\right)$$

Figure 1 - Schematic drawing of the simplified geometry of the arc and the conveyor belt

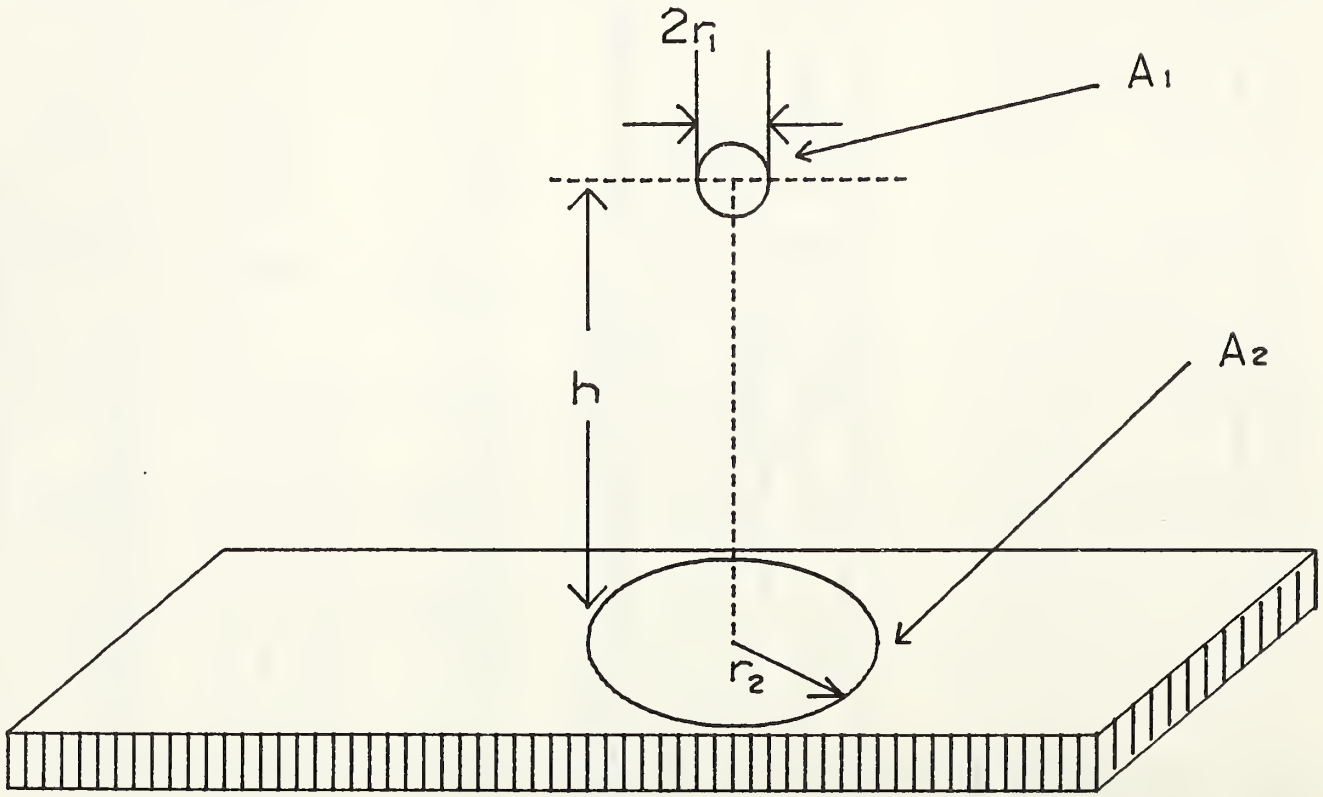

where

Q = Rate of heat transfer, W/cm^2.

F = View factor.

A_1 = Surface area of the arc as seen by the conveyor belt.

σ = Stefan-Boltzman constant (5.67×10^{-8} J/K^4 m^2 sec).

T_1 = Initial temperature of the arc (°K).

T_2 = Initial temperature of the conveyor belt (°K).

Because the arc is opaque, A_1 represents the hemispherical surface area facing the conveyor belt. This is $A_1 = 2\pi r_1^2$. The rest of the arc surface releases energy to the environment but not the conveyor belt. The view factor for this geometry is given by Siegel and Howell [2] as:

$$F = 1/2 \left(1 - \frac{1}{1 + R_2^2}\right)$$

where

$$R_2 = \frac{r_2}{h} .$$

Figure 2 is a plot of the incident heat flux on the surface of a small segment of the conveyor belt versus the arc core size. The core temperature, T_1 is assumed to be 7300°K, and the conveyor belt temperature, T_2, is 300°K.

The incident heat flux is computed for various distances between the arc and the conveyor belt. The incident heat flux on the conveyor belt decreases as the arc is moved further from the belt and as the arc size decreases.

Figure 3 shows the incident heat flux as a function of distance from the center of the arc for three arc diameters. The center of the arc is centered 10 cm above the plane surface. The decrease in incident heat flux is rapid with increasing distance from the arc.

Figure 2 - Energy incident on a conveyor belt as a function of arc core size for 5 distances between the arc and belt

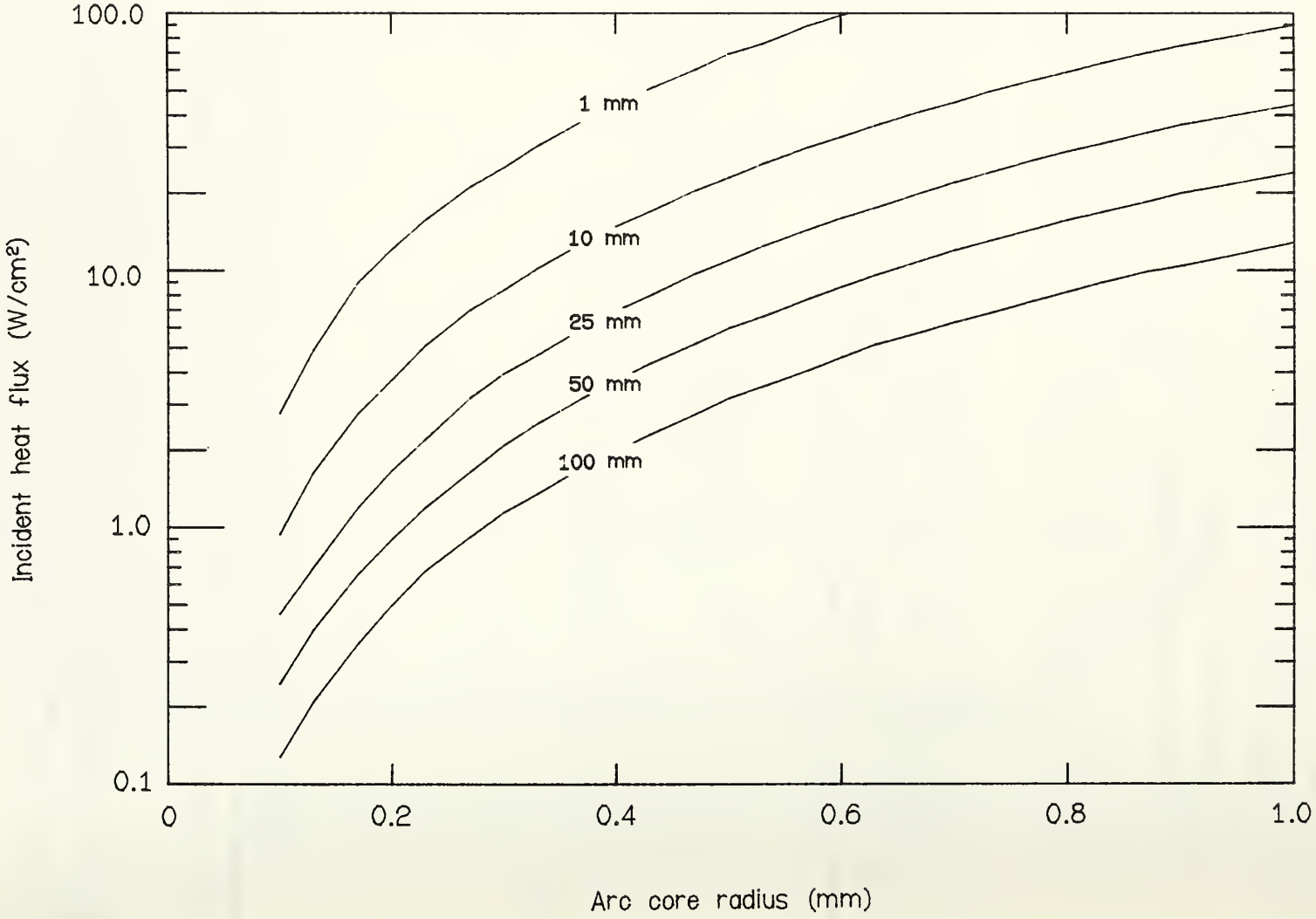

Figure 3 - Incident heat flux on a plane surface for three arc core diameters 10 cm above the plane

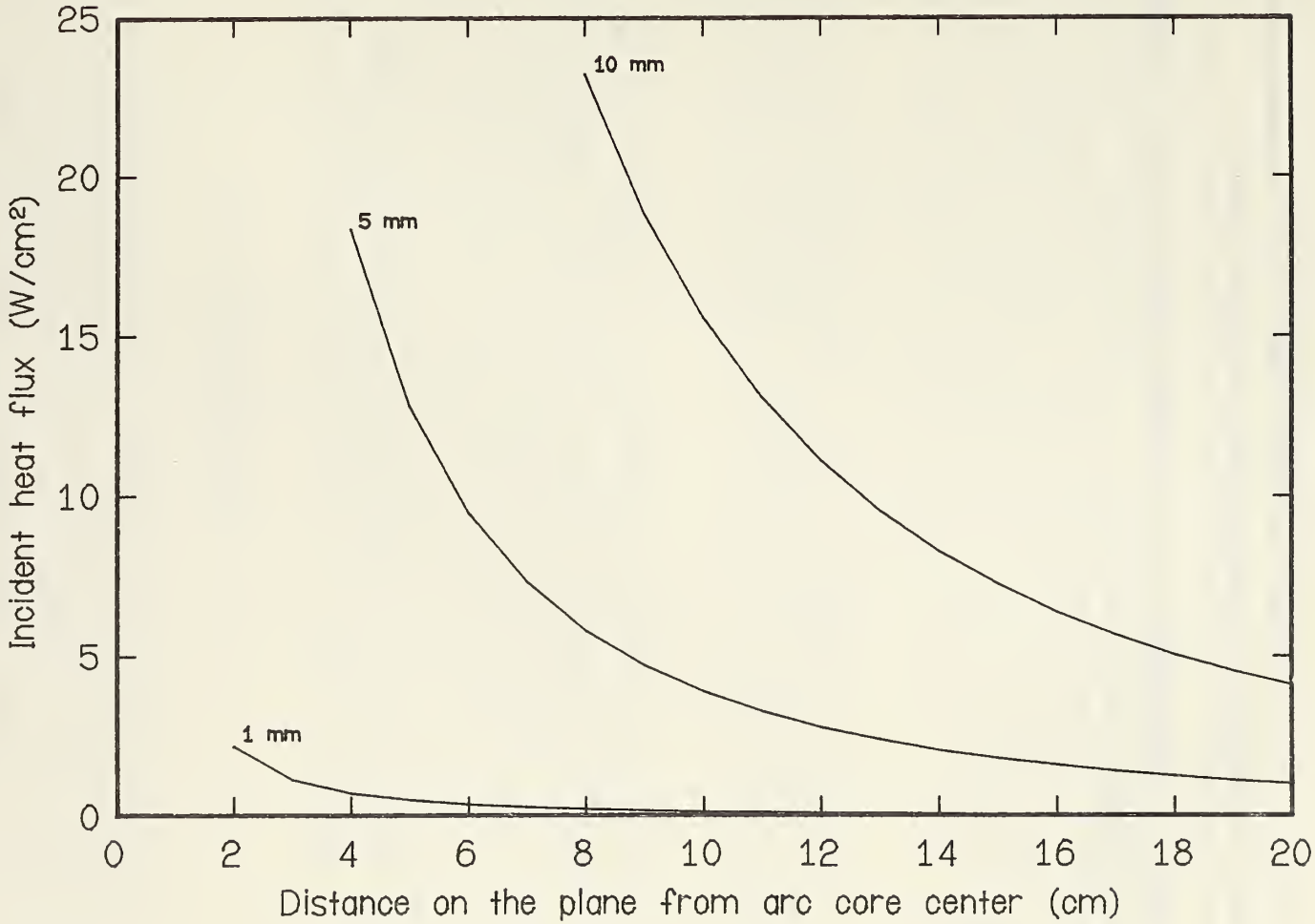

Based on the data presented in appendix D, a belt exposed to the incident energy from a small diameter arc (0.2 mm) 1 mm from its surface would ignite within 10 seconds. As the distance is increased, the time to ignition increases.

References

[1] Cobine, J. D., Gaseous Conductors Theory and Engineering Applications, Dover Publications, Incorporated, New York (1958).

[2] Siegel, R. and Howell, J. R., Thermal Radiation Heat Transfer, McGraw-Hill Book Company, New York (1972).

APPENDIX D

Ignition, Flammability, and Smoke Generation Characteristics of Conveyor Belts Used in Mines

1. INTRODUCTION

Three test methods were used to evaluate 28 conveyor belts and these results were compared to test results obtained using the standard MSHA fire resistance test for self-extinguishment [1]. First the modified NBS smoke box [2] was used to characterize the smoke generating potential of these belts. This could be an extremely important fire parameter considering that belts are used in long confined areas with limited escape routes. Because many areas in an underground coal mine are under forced airflow conditions, large quantities of released smoke could spread to other sections of a mine.

Second, the Flooring Radiant Panel Test [3] measures a material's resistance to propagate a flame when a moderate external source of heat is present. In this case, the external source of heat could be wood lagging or the coal itself.

Third, an ignition apparatus was assembled to measure the ignition potential of these conveyor belts under a range of exposure conditions. These results could, for example, be used to determine the suitability of a conveyor belt based on an assumed energy release rate for a developing fire. Materials with very low ignition delay times may prove unsatisfactory for a specific application because belt ignition may occur before a fire detection system could respond. Once mine operators are made aware of a fire the ignition of the haulage system may seriously hamper escape and rescue procedures.

2. TEST MATERIALS

A total of 28 conveyor belts were obtained from various companies. The cover composition of 14 belts was styrene butadiene rubber (SBR) while the remaining 14 were polyvinyl chloride (PVC). The SBR belts were either single-ply or triple-ply construction using a polyester fiber carcass. The PVC belts were impregnated on a carcass of polyester fiber except number 14 which is a polyester cotton 2-ply construction. With the exception of eight belts, all the tested belts were reported to have been formulated to comply with MSHA requirements. This may indicate the presence of flame-retardant compounds.

Conveyor belt thickness varied from .371 cm to 1.151 cm (see table 1).

3. TEST PROCEDURES

3.1 MSHA Self-Extinguishment Test

The MSHA test is a modification of ASTM D-635. In this test, a small specimen, 15.2 cm x 1.3 cm, is subjected to a bunsen burner flame for 1 minute. The burner is then withdrawn, and a forced airflow along the specimen's long axis is produced by turning on an exhaust fan. The test is continued until all glowing and flaming on the specimen has stopped. Afterglow and after-flame times are recorded. The acceptance criteria require that no flaming shall persist on the specimen for longer than 1 minute after the removal of the burner and afterglow shall not exceed an average of 3 minutes for four specimens.

3.2 NBS Smoke Box - Horizontal

This test method measures the smoke generation potential of nominal 7.5 cm x 7.5 cm solid specimens exposed to a radiant flux level of approximately 2.5 W/cm^2. The smoke produced by the specimen burning in the closed chamber is measured by a light source-photometer combination. The attenuation of the light beam is expressed in terms of optical density for the exposed specimen area, volume of chamber and length of light path. The smoke box used in this test series has been modified from NFPA 258 to use a horizontal specimen and to record weight loss at a reduced incident flux level of 2.0 W/cm^2.

The concurrent measurement of optical density and weight loss combined to give a single number that is the optical density normalized for differences in weight loss [2].

3.3 Flooring Radiant Panel

This test method exposes a specimen placed horizontally to a radiant energy gradient that varies along its 1 m length from 1.1 W/cm^2 to 0.1 W/cm^2 [3]. The specimen is preheated by the radiant heat for 2 minutes, at which time a small pilot flame is applied at the high flux end of the test specimen. The maximum distance burned corresponds to the critical radiant flux (CRF) necessary to support continued flame progagation. The higher the CRF value, the better is the fire performance of the material. The conveyor belts were tested according to the currently accepted test procedure (ASTM E 648).

Table 1. Physical characteristics of conveyor belts

Belt Number	Cover Composition	Thickness (cm)	Density (Kg/m^3)
1	PVC[a]	.666	614
2	PVC	1.151	629
3	PVC	.371	570
4	PVC	.777	619
5	PVC	.932	582
6	PVC	.815	619
7	PVC	.688	623
8	PVC	.996	622
9	SBR[b] (3-ply)	1.014	617
10	SBR (3-ply)	.907	617
11	SBR (3-ply)	1.014	609
12	PVC*	1.006	599
13	PVC*	.828	574
14	PVC*	1.029	581
15	PVC*	.724	617
16	PVC*	.747	567
17	PVC*	.688	408
18	SBR (1-ply)	.772	646
19	SBR (1-ply)	.823	641
20	SBR (1-ply)	.808	647
21	SBR (1-ply)	.676	642
22	SBR (1-ply)	.556	652
23	SBR (1-ply)	.808	641
24	SBR (1-ply)	.587	631
25	SBR (1-ply)	1.016	613
26	SBR* (1-ply)	.907	544
27	SBR (1-ply)	.765	635
28	SBR* (1-ply)	.645	574

[a] Polyvinyl Chloride

[b] Styrene Butadiene Rubber

* Not formulated to meet requirements of MSHA §18.65

3.4 Ignition Tests

An apparatus was assembled to measure the ignition delay time of conveyor belt samples under various radiant flux exposures, airflow velocities, and pilot ignitions. Figure 1 is a schematic representation of the apparatus. It consists of an electrically heated quartz panel which provides a flux field that is uniform over the 5.1 cm diameter of the specimen. The specimen and a heat flux meter are mounted in a slide shelf that allows for rapid interchange of the specimen for the heat flux meter below the radiant panel. A pilot flame ignition source is mounted .64 cm above the center of the specimen. This distance was selected based on work previously performed on floor covering materials [8]. The entire assembly is mounted in a mineral board tunnel that has a square cross-sectional area of 2120 cm^2 and an overall length of 120 cm. A pair of exhaust fans are mounted at one end of the tunnel to allow for the introduction of various airflow rates across the surface of the specimen.

To test a specimen, the radiant panel is heated so as to provide the desired incident heat flux as measured by the heat flux meter. This setting is checked before and after each test. The total heat flux at the center of the specimen is the sum of that supplied by the radiant panel and by the pilot ignition source. This value is reported because invariably ignition occurred directly below the pilot source.

4. DISCUSSION

4.1 MSHA Self-Extinguishment Test

For purposes of establishing a baseline of performance, all of the samples were tested according to the procedure outlined in the Code of Federal Regulations 30:18.65. Table 2 is a summary of these results. Of the 28 conveyor belts tested, 20 had been previously tested and approved by MSHA (numbers 1-11, 18-25, 27). The remaining eight belts (numbers 12-17, 26, 28) were not intended for use in underground coal mines and, therefore, had not previously been tested according to this procedure.

The tests indicate that all previously approved belts consistently met the acceptance criteria. Three belts which had not been previously approved and were, therefore, not formulated to meet the acceptance criteria were found to perform as well as the previously accepted belts.

Figure 1 - Schematic diagram of ignition apparatus

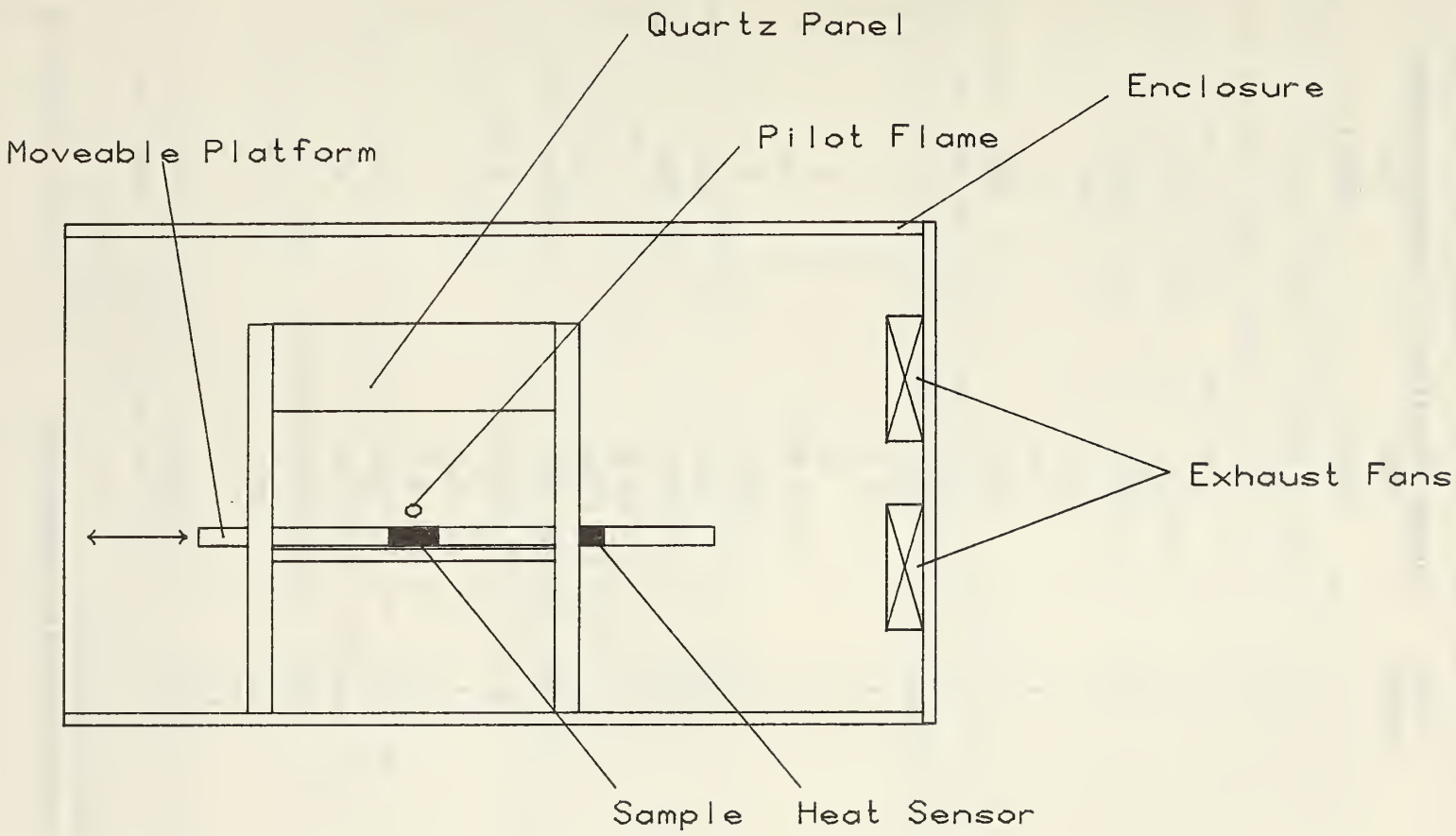

Table 2. Test results on conveyor belts using the Mine Safety and Health Administration test method 30:18.65, average of 4 specimens

Belt Number	Average Afterflame Time (sec.)	Average Afterglow Time (sec.)
1	4.0	0
2	0	0
3	3.8	0
4	4.4	0
5	3.6	0.6
6	2.6	0
7	1.6	5.0
8	2.4	3.0
9	2.4	0
10	11.0	0
11	2.6	3
12	.4	0
13	4.4	2.0
14	206.0	0
15	3.6	1.2
16	241.8	180
17	>65.0	- *
18	1.0	2.0
19	4.0	0
20	2.0	0
21	2.6	0
22	1.2	0
23	3.6	0
24	7.8	0
25	4.2	0
26	>65.0	- *
27	.4	0
28	>65.0	- *

* Specimen manually extinguished

The difference between measured values and acceptance criteria for all the belts meeting the criteria was so large that there could be no question as to acceptance. For example, afterflame times on individual specimens never exceeded 36 seconds and the longest afterglow time was 8 seconds. The average value for each sample was, therefore, very low.

The same was true of the failing belts. The failure criterion was exceeded for each specimen tested. These samples, which were not flame retardant or designed to meet MSHA requirements, exhibited persistent and sometimes vigorous burning characteristics. Because of the size of the flames and the quantity of smoke produced, three belts (numbers 17, 26, 28) were manually extinguished. No afterglow times were recorded for these belts and the afterflame times represent the time of manual extinction of the specimen.

Belt performance for this set of samples was either clearly acceptable or not acceptable. No samples tested exhibited borderline behavior. Such clear cut distinctions were not noted in the other fire tests performed on the belt samples.

4.2 Smoke Data

In the modified NBS smoke box (horizontal specimen), two sizes of square samples were used. A square 5.1 cm on a side and a smaller square 2.5 cm on a side were tested under an external flux of approximately 2.0 W/cm^2. The standard size specimen was not used because preliminary tests indicated that the amount of smoke produced from this size overwhelmed the .51 cu m smoke box. It was found that many of the 5.1 cm samples exceeded the maximum possible density reading, Dm, of 1080.

Table 3 shows the maximum optical density, Dm, obtained for 14 belt materials using a 26 sq cm (5.1 by 5.1 cm) size sample. The Dm values for most of these belts was 1080. Comparisons between belts could not, therefore, be done using the Dm values.

In order to analyze this data, two methods for calculating the Mass Optical Density were used. The method employed by Breden and Meisters [3] required the use of the maximum optical density and the weight loss at that time in the following equation:

Table 3. Maximum optical density, D_m, for 5.1 cm by 5.1 cm conveyor belt samples tested in the modified NBS smoke density chamber

Belt Number	D_m
1	1060
2	1080
3	1080
4	1060
5	1080
6	1025
7	1080
8	1045
10	1080
19	1080
21	1080
23	1080
28	1080
29	1080

$$MOD = \frac{V}{L\Delta M} \log_{10} \frac{(100)}{T}$$

where

V = Chamber volume (5.1×10^5 cm^3).

L = Light beam path length through the smoke (91 cm).

ΔM = Sample weight loss (g).

T = % Light transmittance.

MOD = Mass Optical Density (cm^2/gm).

The MOD value calculated in this manner yields a maximum MOD (MOD_M). Chien and Seader [4] have suggested an alternative method of computing the MOD value. The ratio of the rate of change of the optical density,

$$\frac{\Delta OD}{\Delta t} = \frac{\Delta \log_{10} \frac{(100)}{T}}{\Delta t},$$

to the rate of change of the mass loss, $\frac{\Delta M}{\Delta t}$, multiplied by the constant of proportionality $\frac{V}{L}$. This would yield a rate dependent MOD (MOD_R). By this method, comparisons between different specimen sizes could be made even if the total amount of smoke exceeded the maximum measureable value. This would enable one to determine the viability of scaling up the results from the smoke density chamber.

Table 4 lists the MOD_M and MOD_R values for the 28 conveyor belts using a 2.5 by 2.5 cm specimen. In addition, the ratio of MOD_R to MOD_M has been calculated. This ratio indicates that while there may be several exceptions the manner in which the MOD value is calculated is not very important. The average ratio for all 28 samples is 1.16 ± .34. This shows that computations based on the rate of smoke evolution and the rate of mass consumption yield approximately the same values as maximum final state value method. Since for many belts the true maximum values are not known, the rate method of computation will be used.

Table 4. Comparison of mass optical density (MOD) calculated by the maximum values, MOD_m, and the rate values, MOD_r, for a 2.5 cm by 2.5 cm specimen exposed to a 2.0 W/cm^2 external radiation field in the horizontal position

Belt #	MOD_m $(cm^2/g) \times 10^{-3}$	MOD_r $(cm^2/g) \times 10^{-3}$	MOD_r/MOD_m
1	6.26	8.96	1.43
2	5.99	4.87	.81
3	8.51	11.2	1.32
4	5.51	6.50	1.18
5	4.96	5.71	1.15
6	6.14	5.32	.87
7	5.97	5.88	.99
8	5.08	5.10	1.03
9	6.15	5.32	.87
10	6.77	6.38	.94
11	5.73	5.60	.98
12	3.77	6.33	1.68
13	3.07	5.60	1.83
14	4.56	6.44	1.41
15	4.14	6.33	1.53
16	10.4	18.7	1.80
17	7.64	8.34	1.09
18	3.86	5.60	1.45
19	5.88	5.21	.88
20	5.85	5.60	.96
21	6.11	7.73	1.26
22	5.39	7.62	1.41
23	5.60	6.78	1.21
24	4.03	5.88	1.46
25	5.16	4.09	.79
26	5.44	2.86	.53
27	4.31	5.15	1.20
28	7.41	3.30	.45

A comparison of data from different specimen sizes, table 5, indicates that for about one-third of the samples tested specimen size did not have a significant effect on MOD_R values. However, for the remaining two-thirds of the samples, variations between specimen sizes were noted. No clear explanation currently exists to explain the data, however, Chien and Seader [5] have shown that variations in incident heat flux can yield different MODs. For example, they showed that for cellulose, an increase in external heat flux reduces the MOD value. They found the reverse effect to be true for a polyurethane sample. The same may be valid for the two specimen sizes tested here. Although the external heaters were set to produce an incident flux of approximately 2 W/cm^2, allowance was not made for the pilot flame. Because all of the samples were tested in the presence of a pilot flame, the net incident flux per unit surface area was higher for the 2.5 by 2.5 cm specimen than for the 5.1 by 5.1 cm specimen. The actual direction of the shift would depend on the fillers and carcass material added to the base polymer. More detailed work in this area would have to be done to verify this assumption.

Figure 2 summarizes the smoke data and demonstrates that, as in other areas of fire safety, an improvement in one aspect of fire performance may do little to improve other fire characteristics. It is not surprising to note that, as measured by the MOD, material improvements necessary to meet MSHA requirements have not resulted in parallel improvements in decreased smoke generating potential.

4.3 Critical Radiant Flux

The Flooring Radiant Panel Test represents a more severe exposure condition than defined by MSHA's §18.65. However, except for the parameter value reported and the exposure condition, these tests measure similar fire properties of a material. Extinguishment in the MSHA test and the Flooring Radiant Panel Test is controlled by the level of energy feedback from the flame front to the material substrate. Since the source is removed (after a 60-second application to the specimen) in the MSHA test, extinguishment is controlled by feedback from only the flame front, whereas, in the Flooring Radiant Panel Test the feedback mechanism is enhanced by the presence of the gas panel. In either case, extinguishment occurs when the minimum flux into the substrate falls below some critical value. The major conceptual difference between these tests is that one reports the time it takes for the feedback energy to decrease to this critical value and the other reports the value of the critical radiant flux (CRF). The rank order of materials should be approximately the same. That is, those materials with long afterflame times

Table 5. Comparison of mass optical density (MOD_r) as calculated by the rate method for two different specimen sizes exposed to a 2.0 W/cm^2 external radiation field in the horizontal position

Specimen Size	2.5 by 2.5 cm	5.1 by 5.1 cm	
Belt Number	MOD_r $(cm^2/g) \times 10^{-3}$	MOD_r $(cm^2/g) \times 10^{-3}$	$\frac{MOD_r\ (2.5)}{MOD_r\ (5.1)}$
1	8.96	7.45	1.20
2	4.87	8.29	.59
3	11.2	7.00	1.60
4	6.50	7.73	1.19
5	5.71	9.13	.63
6	5.32	4.26	1.25
7	5.88	7.47	.79
8	5.10	4.88	1.05
9	5.32	4.41	1.21
10	6.38	30.6	.21
11	5.60	18.8	.33
12	6.33	3.42	1.85
13	5.60	3.95	1.42
14	6.44	8.96	.72
15	6.33	4.54	1.39
16	18.7	6.79	2.74
17	8.34	2.80	2.98
18	5.60	6.63	.84
19	5.21	6.53	.80
20	5.60	5.34	1.05
21	7.73	5.71	1.35
22	7.62	7.54	1.01
23	6.78	2.95	2.30
24	5.88	3.39	1.73
25	4.09	4.77	.86
26	2.86	5.60	.51
27	5.15	3.38	1.52
28	3.30	4.85	.68

Figure 2 - Range of Mass Optical Density values for conveyor belts that 'Pass' and 'Fail' MSHA requirements showing the range and average value (dashed lines)

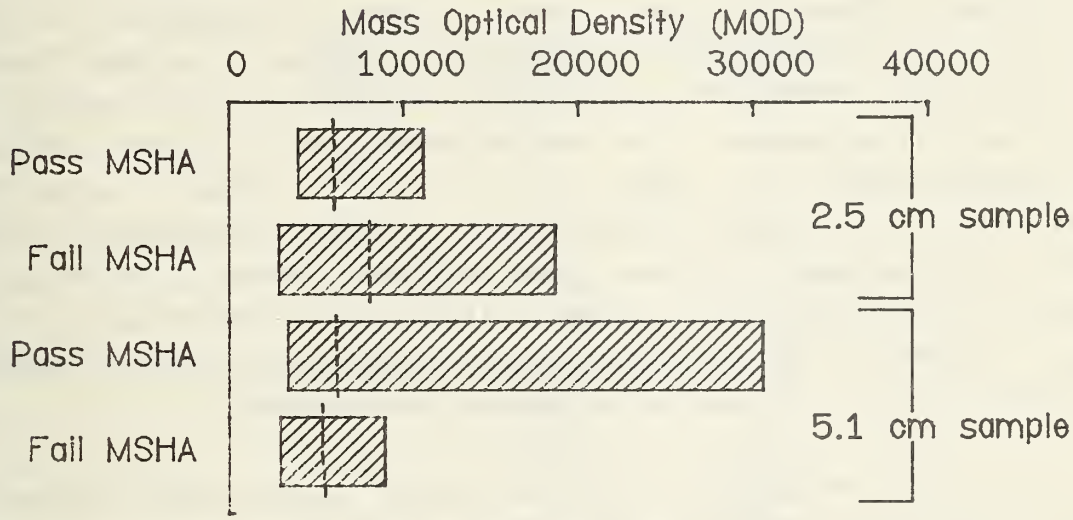

should have low CRF values. (Of course, the same would not be true for afterglow times.)

Since belt performance in terms of acceptability on MSHA's test method was either very good or very poor it was not possible to compare test results directly. However, table 6 summarizes the data obtained on the Flooring Radiant Panel for selected belts and compares them to afterflame time results on the MSHA test. These belts are listed in order of decreasing CRF values. The data shows that with the increased exposure intensity of the Flooring Radiant Panel Test, a range of values were obtained for belts meeting MSHA fire resistance requirements. The data extended over 90 percent of the Flooring Radiant Panel's test range (.11-1.1 W/cm^2). Based on afterflame time, MSHA test results were all contained within the lower 10 percent of the acceptable range (0-60 seconds). It was found that belt number 13 which had a short afterflame and afterglow times on MSHA's §18.65 had a CRF value of .21 W/cm^2. Although, in general, the two tests yield a comparable ranking of materials, the correlation is not as good as originally anticipated.

In the initial development and selection of criteria for this test, Benjamin and Adams [6] determined that two criteria were necessary. For residential and commercial applications, a floor covering material with a minimum CRF of .25 W/cm^2 would be acceptable, and in institutional buildings the minimum CRF should be .50 W/cm^2. The primary distinction between these two types of occupancies is the mobility of the occupants. A higher level of performance is required for those applications where the occupant's movements are physically or medically restricted, such as prisons or hospitals.

Coal mines also represent a physically restricted environment. Escape routes are few and rapid movement in the mines is sometimes hampered by the low ceiling. In the event of a fire, smoke would be an additional element that would tend to further impede escape. For these reasons, some of the materials currently meeting MSHA requirements may pose a risk not assessable by MSHA §18.65.

4.4 Ignition Characteristics

Ignition experiments were performed on the conveyor belt samples using a radiant panel and a nonimpinging diffusion flame pilot as described in section 3.4. Results from these experiments gave some indication of the ignition potential of these belts.

Table 6. Critical radiant flux (CRF) obtained on the Flooring Radiant Panel Test and MSHA test results of selected conveyor belts

Belt Number	CRF (W/Cm^2)	Afterflame (sec)
3	>1.1	3.8
9	>1.1	2.4
11	>1.1	2.6
12	.80	0.4
1	.62	4.0
8	.57	2.4
13	.21	4.4
14	.19	206.0
17	<.11	>65.0

Table 7 is a tabulation of the ignition delay times for SBR belts exposed to various intensities of incident heat flux. The data shows that, at high heat flux levels, the ignition delay of these belts fall into a very small range of values, 12 to 17 seconds. As the incident heat flux is reduced, the width of the range of values increases. At 2.16 W/cm^2, the range is 69 to 103 seconds, while at 1.26 W/cm^2, the range is 168 to 439 seconds. This represents a 7 to 1 increase in the width of the range. Below 1.26 W/cm^2 there is only one exposure level and its range width is approximately the same--295 seconds at .92 W/cm^2 as compared to 271 seconds at 1.26 W/cm^2. This suggests that differences in belt fire performance are more readily apparent at low exposure levels.

However, those belts not formulated to meet the requirements of MSHA §18.65 did not have the highest or lowest ignition delay times. A plot of ignition delay time against specimen thickness for a given level of incident heat flux (see figure 3) indicates the importance of specimen thickness in defining belt response to incident radiation. These data further reinforce the idea that distinctions in belt performance are more readily apparent at low exposure levels.

Table 8 is a tabulation of ignition test results for PVC belts under various exposure conditions. Similar results were obtained with the PVC belts as compared to those with the SBR belts. The width in the range of values increased with decreases in the incident heat flux. A reduction in incident heat flux from 2.16 W/cm^2 to 1.26 W/cm^2 represents a 5-fold increase in the spread of ignition delay times. Further reductions in incident heat flux do not produce as dramatic an increase in the width of ignition delay times.

PVC belts consistently ignited sooner than SBR belts at the same level of exposure. At 2.16 W/cm^2, the shortest ignition delay time for an SBR belt was 55 seconds, while the longest ignition delay time for a PVC belt was 40 seconds. At lower levels of exposure, some overlap in extreme values was noted.

Ignition delay times for PVC belts did not appear to depend on belt thickness, although most of the PVC belts were impregnated and the SBR belts were of a single or multi-ply construction.

Several conveyor belts were selected for determining belt ignition characteristics during low-level, long-term exposures to incident radiant energy. As in the previous ignition tests, piloted ignition was studied. Table 9 lists the results of these tests for the selected belts. The minimum

Table 7. Ignition delay time (seconds) for SBR conveyor belts exposed to various intensities of incident heat flux

Belt Number	Incident Heat Flux W/cm^2						
	.84	.92	1.26	2.16	3.1	3.3	5.3
9	410		315	55		21	16
10	365		295	70		20	17
11	470		300	100		24	16
18		519	271	78	33		15
19		546	227	93	43		12
20		552	238	103	44		13
21		413	186	87	33		12
22		361	168	69	33		13
23		404	232	84	37		12
24		398	198	79	36		14
25		656	270	97	35		13
26*		623	439	87	30		12
27		557	222	90	43		14
28*		392	257	78	36		12

* Not formulated to meet requirements of MSHA §18.65

Figure 3 – Ignition delay time for SBR conveyor belts exposed to a radiant flux field with a pilot flame

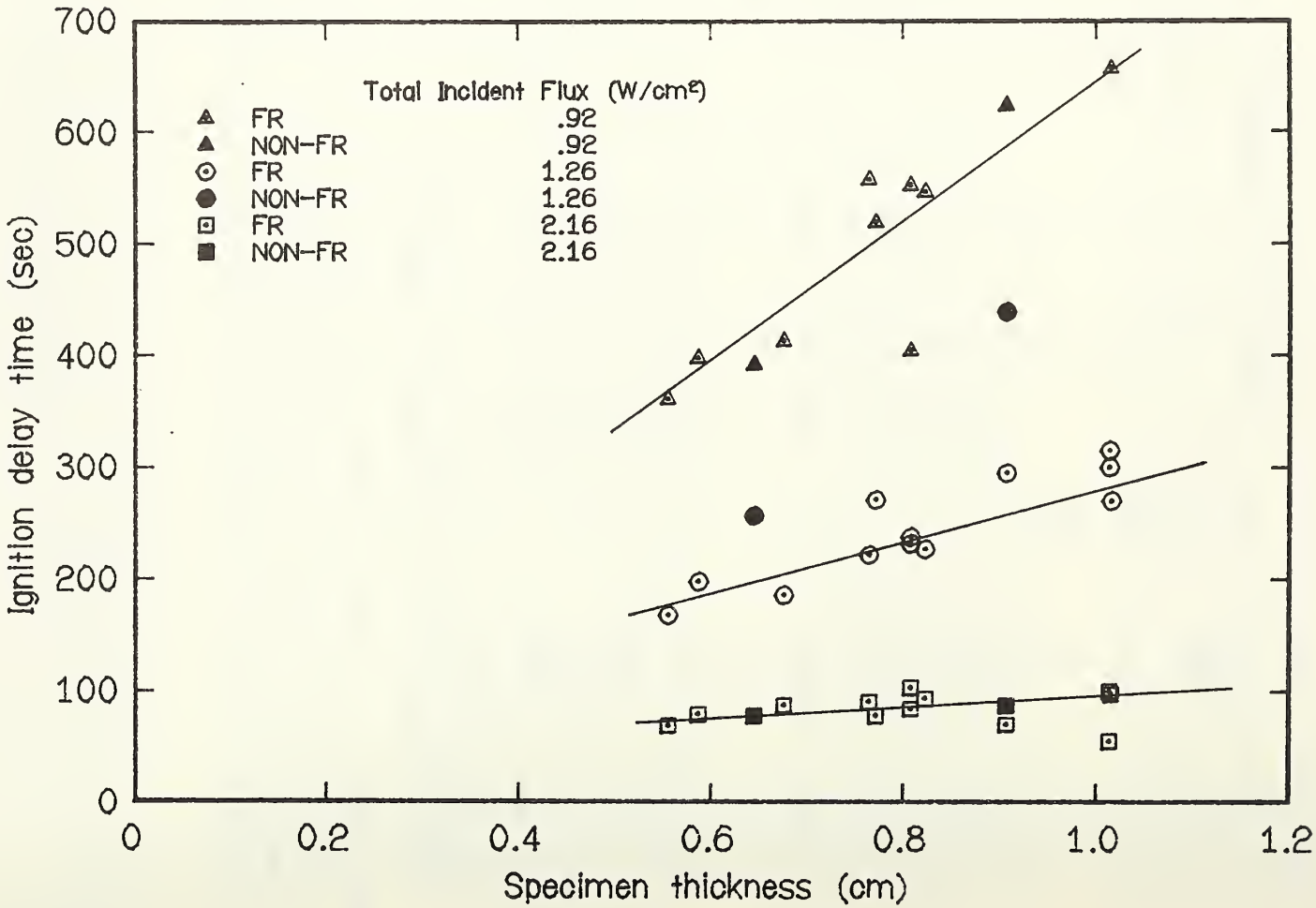

Table 8. Ignition delay time (seconds) for PVC conveyor belts exposed to various intensities of incident heat flux

Belt Number	Incident Heat Flux W/cm^2				
	.84	1.26	2.16	3.3	5.3
1	240	108	33	14	7
2	132	120	40	17	7
3	195	123	24	14	6
4	120	240	30	15	5
5	205	157	5	8	5
6	346	130	23	16	7
7	295	127	19	17	6
8	189	63	12	15	7
12*	203	185		15	9

* Not formulated to meet requirements of MSHA §18.65

Table 9. Minimum incident heat flux necessary for ignition and the ignition delay time for selected conveyor belts

Belt Number	Incident Heat Flux	Ignition Delay Time
	W/cm^2	min
1	.34	109
2	.40	77
3	.58	80
4	.45	169
12	.47	180
18	.48	176
20	.69	83
26	.54	83

incident heat flux necessary for the establishment of a flame on the conveyor belt was determined by conducting ignition tests at progressively lower exposure levels. The ignition delay time was recorded as the time for the establishment of a flame on the conveyor belt at the minimum exposure level. While the results show that both PVC and SBR conveyor belts ignited from low-level exposures, flame spread behavior was different. SBR conveyor belts ignited below the pilot and flames spread over the entire specimen surface. While PVC conveyor belts established a flame on the specimen surface, flames were confined to the center of the specimen and did not spread over the entire surface.

5. CONCLUSIONS

The fire properties of 28 conveyor belts were evaluated using four different test procedures. The current MSHA test measures a belt's performance in terms of an unclear combination of ignitability and flame spread.

The NBS modified smoke box indicated that the smoke generated by belts meeting MSHA requirements was equivalent to belts not meeting those requirements. Since no requirements exist to limit the maximum smoke generating potential of conveyor belts, the belts demonstrate no systematic effort to inhibit smoke production.

The Flooring Radiant Panel Test indicated that belts acceptable for use in underground coal mines could propagate a flame under a moderate exposure level. This exposure level is somewhat more severe than MSHA's current test procedure.

Ignition tests demonstrated that for low-level exposures (less than 1.26 W/cm^2) of SBR belts, thicker belts provide more ignition resistance than thinner belts.

6. REFERENCES

[1] Code of Federal Regulations, Title 30, Part 18.65 (1977).

[2] Breden, L. and Meisters, M., The effect of sample orientation in the smoke density chamber, Nat. Bur. Stand. (U.S.), NBSIR 76-1030 (May 1976).

[3] Hartzell, L. G., Development of a radiant panel test for flooring materials, Nat. Bur. Stand. (U.S.), NBSIR 74-495 (May 1974).

[4] Seader, J. D. and Chien, W. P., Mass optical density as a correlating parameter for the NBS smoke density chamber, Journal of Fire and Flammability, Vol. 5, 151 (April 1974).

[5] Chien, W. P. and Seader, J. D., Smoke development at different energy flux levels in an NBS smoke density chamber, Fire Technology (August 1974).

[6] Benjamin, I. A. and Adams, C. H., Proposed criteria for use of the critical radiant flux test method, Nat. Bur. Stand. (U.S.), NBSIR 75-950 (December 1975).

[7] DenBraven, K., Radiative ignition of some typical floor covering materials, Nat. Bur. Stand. (U.S.), NBSIR 75-967 (December 1975).

APPENDIX E

Evaluation of the MSHA Test for the Flammability of Conveyor Belts

1. INTRODUCTION

This report describes the work performed on the MSHA Test Method for the Flammability of Conveyor Belts, as described in Title 30 of the Code of Federal Regulations (§18.65). The description of this test method has been found to be vague in several critical areas. Terms such as natural gas, air-flow, and cabinet configuration are undefined. In addition, no statement of precision is given for the various test parameters.

This work investigated the interaction of the sample with various test parameters in the context of the existing acceptance criteria, which is an average afterflame time of less than 1 minute and an afterglow time of less than 3 minutes. The impact that variations in test parameters have on the test results were determined by testing a set of conveyor belt samples obtained from various manufacturers. In addition, the ignition source was characterized in terms of energy absorption by a simulated specimen.

2. IGNITION SOURCE

The ignition source is described in the regulations as a Pittsburgh-Universal bunsen type burner with a burner tube having an inside diameter of 11 mm. The fuel is specified as natural gas and is used to produce a blue premixed flame 7.6 cm high. The composition or heat content of natural gas and the portion of the flame that is measured to determine flame height are not defined. In addition, it is implied that a natural gas orifice (1.1 mm) is to be used in the burner. It was found, however, that both the apparatus obtained by NBS and that in use by MSHA employ a Pittsburgh-Universal bunsen burner with an artificial gas orifice (1.9 mm).

2.1 Heat Release Measurements for Different Methane Concentrations

Three concentrations of methane were used to measure the energy an exposed specimen may receive. To evaluate the energy release rate in the flame, the gas flow rate was measured using a calibrated in-line flow meter. Both the artificial and natural gas burners were used. After a premixed blue

flame was established with an inner cone height of 7.6 cm, the gas flow was recorded. Using the measured gas flow rate and the heat of combustion for methane, the rate of energy release was calculated assuming complete combustion. It was found that for methane concentrations of 93, 97, and 99 percent the minimum calculated rate of energy release was 13.7 J/sec, 14.3 J/sec, and 14.6 J/sec, respectively, for both burners.

Tests were also run to determine what fraction of energy release in the flame may be transferred to a specimen. An approximate way to determine this quantity is to measure the energy absorbed by a copper slug having the same dimensions as the sample and mounted and exposed to the flame in a similar manner. Measurements were made with different methane concentrations using a copper bar, 2.5 x 1.27 x 0.63 cm, mounted on a rigid plastic support. Figure 1 shows that the energy absorbed by a specimen exposed to a flame from the artificial gas burner is slightly greater than when the specimen is exposed to the natural gas burner flame. However, only approximately 12-14 percent of the total energy available can be expected to be transferred to the test specimen.

2.2 Heat Release Measurements for Different Flame Heights

Measurements of the energy absorbed by the simulated specimen were also made at several flame heights (inner cone height of 6.3 to 8.9 cm) using 93 and 99 percent methane. The data (see figure 2) indicates that changes in flame height for the artificial gas burner produced slight differences in the heat transfer rate at inner cone heights of 7.0 cm and 99 percent methane and 7.6 cm and 93 percent methane. Throughout the remainder of the range tested no discernible difference in heat transfer rate was noted.

The natural gas burner showed a systematic difference in the heat transfer rate as the flame height was adjusted and, as previously shown, the methane gas concentration was varied. However, the data for both burners was within ±10 percent of their respective means.

3. COMPARISON OF ARTIFICIAL AND NATURAL GAS BURNER

Due to the apparent discrepancy between the apparatus in use by MSHA and the implied statements in the regulations, tests were conducted comparing the performance of a group of conveyor belts exposed to a premixed blue flame produced by an artificial gas burner and a natural gas burner. (The belts used

Figure 1 - Heat transferred to a specimen exposed to a flame from an artificial burner and a natural gas burner

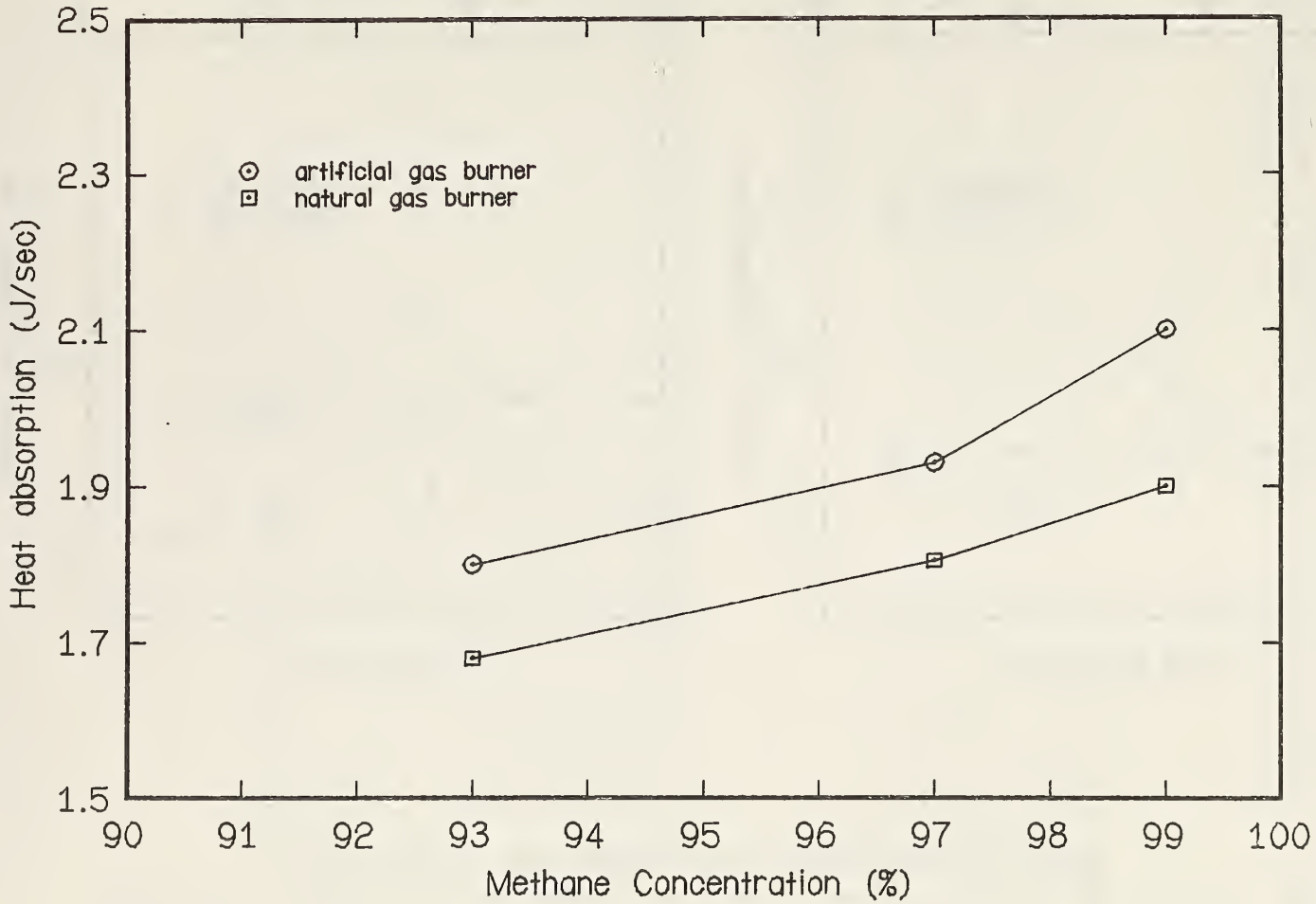

Figure 2 - Effect of variations in flame height on heat absorption rate for natural gas burner and artificial gas burner

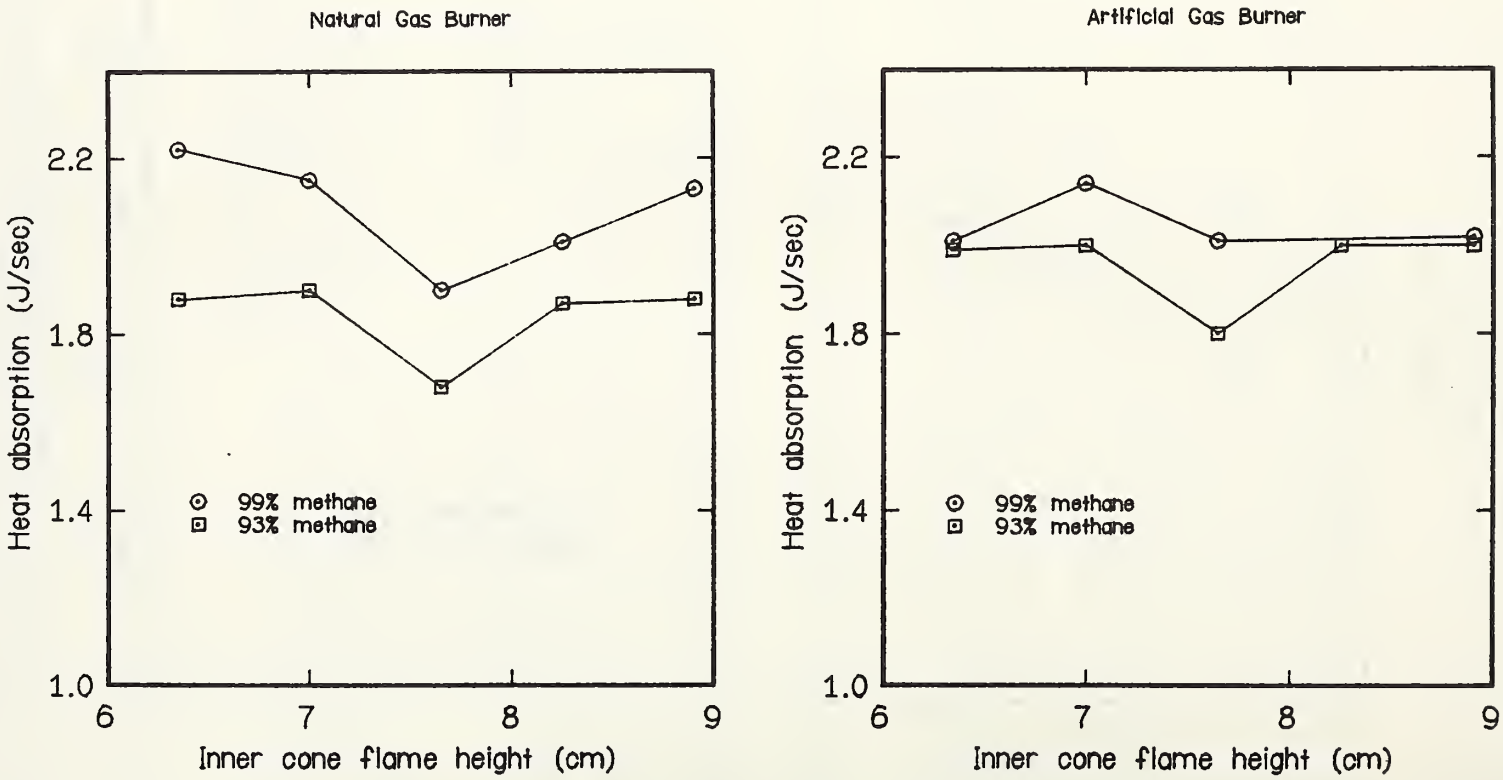

in this report are described in appendix D, with the addition of samples obtained from the Factory Mutual tests [1], table 1.)

The operating conditions outlined in the regulations were followed with the additional stipulations that: the flame height was adjusted to produce a premixed blue inner cone of 7.6 cm, and the gas used had a methane content of 93 percent. This was chosen to follow as closely as possible the equipment and procedures used by MSHA.

3.1 Afterflame Time

Figure 3 is a graph of test results comparing the artificial gas burner with the natural gas burner. The results indicate, that for the same flame height, the artificial burner yields longer afterflame times. For three samples, the results were significantly different in that these samples failed the acceptance criteria when exposed to a flame from the artificial gas burner but passed the acceptance criteria when exposed to a flame from the natural gas burner.

3.2 Afterglow Time

Figure 4 shows the results of afterglow time measurements, in the range of zero to 10 seconds, made on those samples that exhibited glowing after the flame extinguished. With few exceptions, the afterglow persisted for a longer time after an exposure to the natural gas burner than the artificial gas burner. For the majority of belts, use of the artificial gas burner produced no measurable afterglow, while with the natural gas burner afterglow times were as high as 6 seconds. There were three samples that had an afterglow time greater than 10 seconds. Only one of these samples, #16-PVC, had a longer afterglow time with the artificial gas burner, 180 seconds as compared to zero seconds when exposed to the natural gas burner. However, in all three cases, independent of the burner employed, the samples would have been rejected because they had not met the afterflame criterion.

4. IGNITION TIME

In order to determine the sensitivity of a material's performance to variations in ignition time, tests were conducted at three exposure times and the resulting afterflame and afterglow times were recorded. The average afterflame time for the 29 belts listed in appendix D are tabulated in table 2.

Table 1. Description of Conveyor Belts Used in the Factory Mutual Study

Belt Number	Cover Material	Thickness
		mm
30	PVC	10
31	PVC	8
32	PVC (1-ply)	10
33	SBR (3-ply)	11
34	SBR (3-ply)	11
35	Neoprene (3-ply)	12
36	Neoprene (3-ply)	12

Figure 3 – Effect of burner type on afterflame time

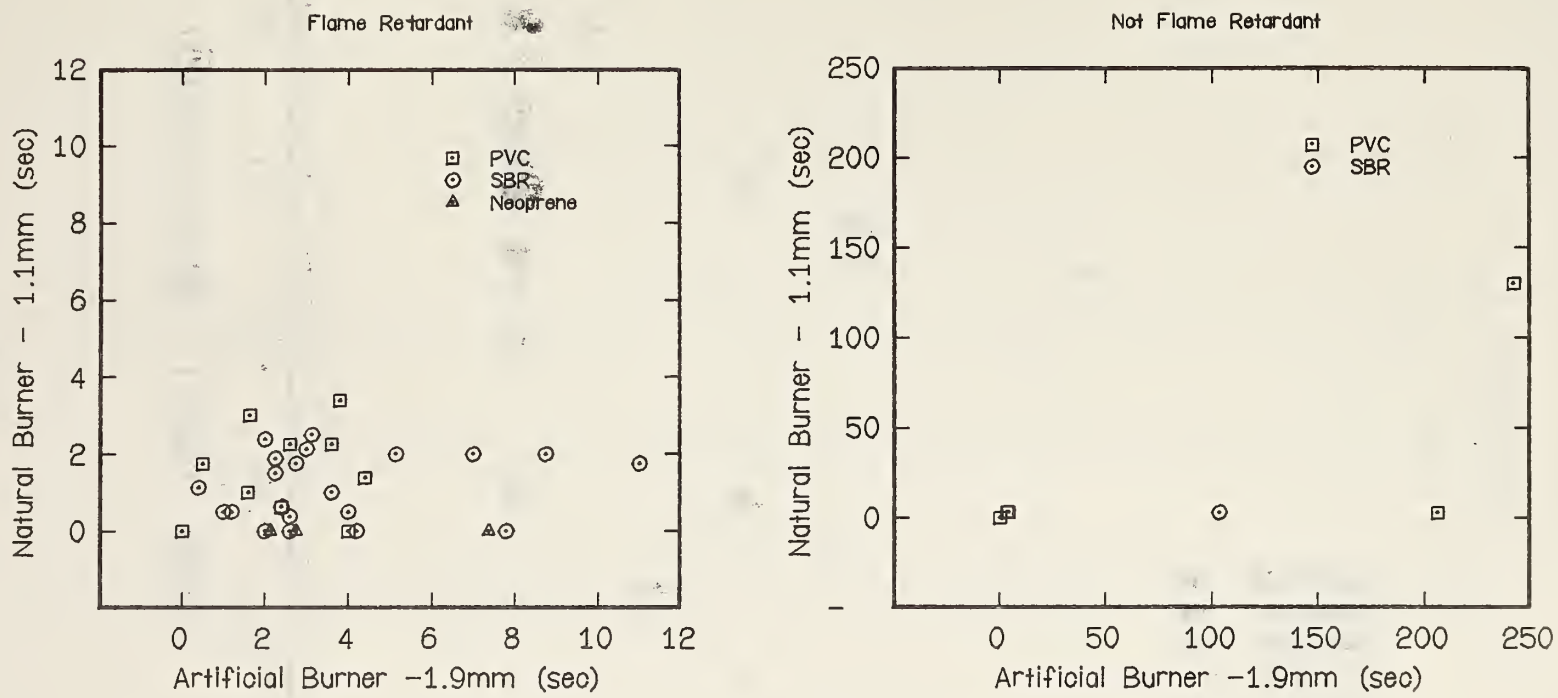

Figure 4 - Effect of burner type on afterglow time

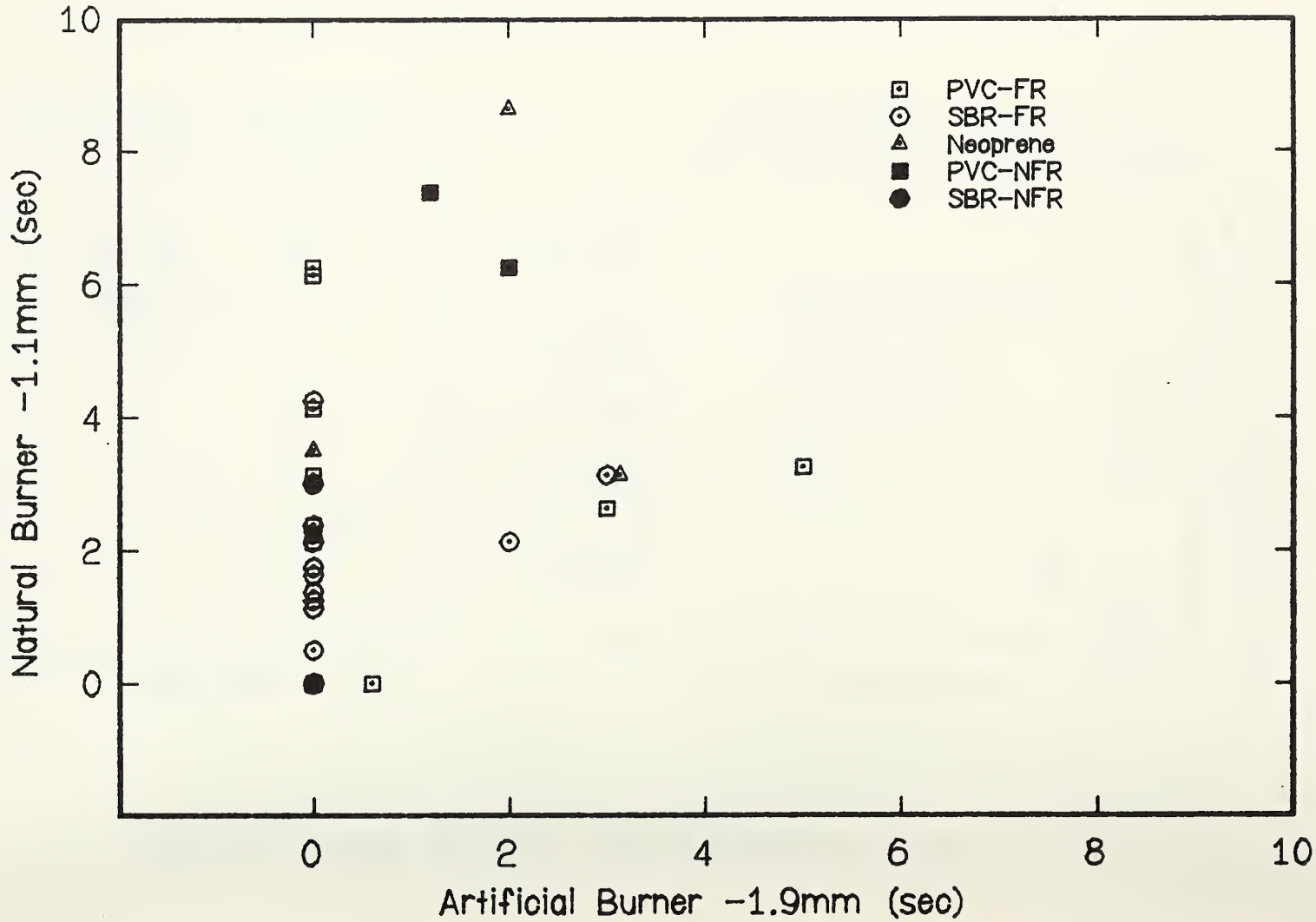

Table 2. Effect of Ignition Exposure Time on Average Afterflame Time Using an Artificial Burner and 93 Percent Methane

	Exposure Time		
Belt #	45 sec	60 sec	75 sec
1	2.3	2.3	3.0
2	0.7	1.0	1.0
3	3.0	2.8	2.5
4	4.3	5.8	4.8
5	2.0	2.0	2.0
6	3.0	5.0	4.3
7	3.0	5.0	3.6
8	2.0	1.0	1.0
9	1.0	6.3	5.0
10	2.3	4.3	2.6
11	2.3	3.0	5.0
12	0.0	0.0	0.0
13	3.0	5.0	17.3
14	120.0	240.0	240.0
15	3.0	3.3	5.0
16	145.3	158.3	191.0
17	213.0	105.3	120.0
18	2.2	3.0	2.3
19	5.3	5.3	4.3
20	4.8	5.0	14.0
21	1.6	3.0	5.3
22	2.6	5.0	2.0
23	1.0	4.3	6.6
24	2.0	3.0	4.0
25	2.6	6.3	8.6
26	39.0	111.0	99.0
27	1.6	4.0	6.0
28	49.0	120.0	120.0
29	3.0	3.3	3.3

The afterglow times for those samples that also exhibited an afterglow are listed in table 3.

Exposure times of 45, 60, and 75 seconds were used. The test procedure followed by MSHA was used. This included the use of an artificial gas burner with fuel containing 93 percent methane.

It was found that for most samples the exposure time had a marginal effect on afterflame time and, with the exception of one sample, had no effect on afterglow time. Sample number 17 exhibited prolonged glowing after a 45-second exposure to the ignition source. Increasing the exposure time eliminated afterglowing. This sample, however, also had afterflame times in excess of the acceptance criterion for all three exposure conditions.

There were only two samples, numbers 26 and 28, that were acceptable at a 45-second exposure time but not acceptable when the exposure time was increased to 60 and 75 seconds. With a mean exposure time of 60 seconds, it would seem that fluctuations about this mean would not appear to introduce significant deviations in the final results. Furthermore, differences in the type of burner or fuel used should also introduce minimal deviations. The total energy absorbed by a specimen can roughly be approximated by using the data in figure 1. Using a fuel containing 93 percent methane, the heat transfer rate for an artificial gas burner is 1.8 J/sec. Calculations show that a specimen may absorb approximately 81, 108, and 135J for 45, 60, and 75-second exposure times, respectively. The use of any fuel with a higher concentration of methane could not be expected to transfer any more energy than the 75-second exposure. For example, using a fuel with a methane concentration of 99 percent and an artificial gas burner, the energy transferred is approximately 125J for a 60-second exposure.

5. SAMPLE ORIENTATION

An artificial gas burner using 93 percent methane as a fuel was used to evaluate the changes in afterflame time as the specimen was varied from its prescribed horizontal position. In addition to the horizontal position, four angles were selected. Two angles, 5 and 10 degrees above the horizontal, were chosen to represent downward burning samples, while two angles, 5 and 10 degrees below the horizontal, were chosen to represent upward burning samples. Each specimen was positioned in the cabinet so that the end of the sample was located 2.5 cm above the burner.

Table 3. Effect of Ignition Exposure Time on Average Afterglow Time

	Exposure Time		
Belt #	45 sec	60 sec	75 sec
1	4.0	4.5	6.3
3	1.8	4.3	2.5
6	5.8	5.5	7.0
7	4.7	5.3	4.0
12	0.3	2.0	1.3
17	220.0	0.0	0.0
29	102.3	138.0	144.0

Eight belt samples were selected for testing. The results (see table 4) indicate that a ±10-degree variation in mounting angle have no significant effect on the final results. In no case did these variations cause a sample to move from the acceptable category to unacceptable or vice versa.

6. AIRFLOW

The current test procedure calls for the introduction of an airflow along the specimen's longitudinal axis on removal of the burner. The airflow is applied in the direction of flame spread at 90 Mpm (300 FPM). The timing of afterflame begins with the start of the blower and afterglow measurements begin with the extinguishment of flaming combustion on the specimen. Variations in the speed of the flowing air as well as the time it takes to achieve steady-state flow can be expected to affect the final results.

6.1 Steady-State Flow Rate

Tests were conducted on a total of 45 conveyor belt samples; the 29 listed in appendix D, and seven conveyor belts from the Factory Mutual test series (see table 1) plus nine additional belts supplied by MSHA (see table 5). Four flow rate conditions were used with a natural gas burner and 93 percent methane fuel. With the exception of the airflow, the standard test procedure was followed.

Figures 5 and 6 summarize the afterflame and afterglow times obtained for no forced flow and forced flows of 30, 60, and 90 Mpm. Figure 5 shows the frequency distribution of afterflame times over four ranges; less than 5 seconds, between 5 and 25 seconds, between 25 and 60 seconds, and greater than 60 seconds. As the steady-state flow rate increased, the fraction of specimens exhibiting less than 5 seconds afterflame increased. Under nonforced flow conditions, 56 percent of the samples had afterflame times of less than 5 seconds, while at 90 Mpm the number increased to 93 percent. Also, the number of samples with an afterflame time greater than 60 seconds decreased from 22 percent at nonforced flow to 7 percent at 90 Mpm. With increasing flow rates the distribution of samples between the two extremes decreased until the samples either exhibited very short afterflame times or exceeded the acceptance level of 60 seconds. In terms of the acceptance criterion, no difference exists between 60 and 90 Mpm induced flow.

Figure 5 - Frequency distribution of afterflame time for all belts tested under various induced air flow rates

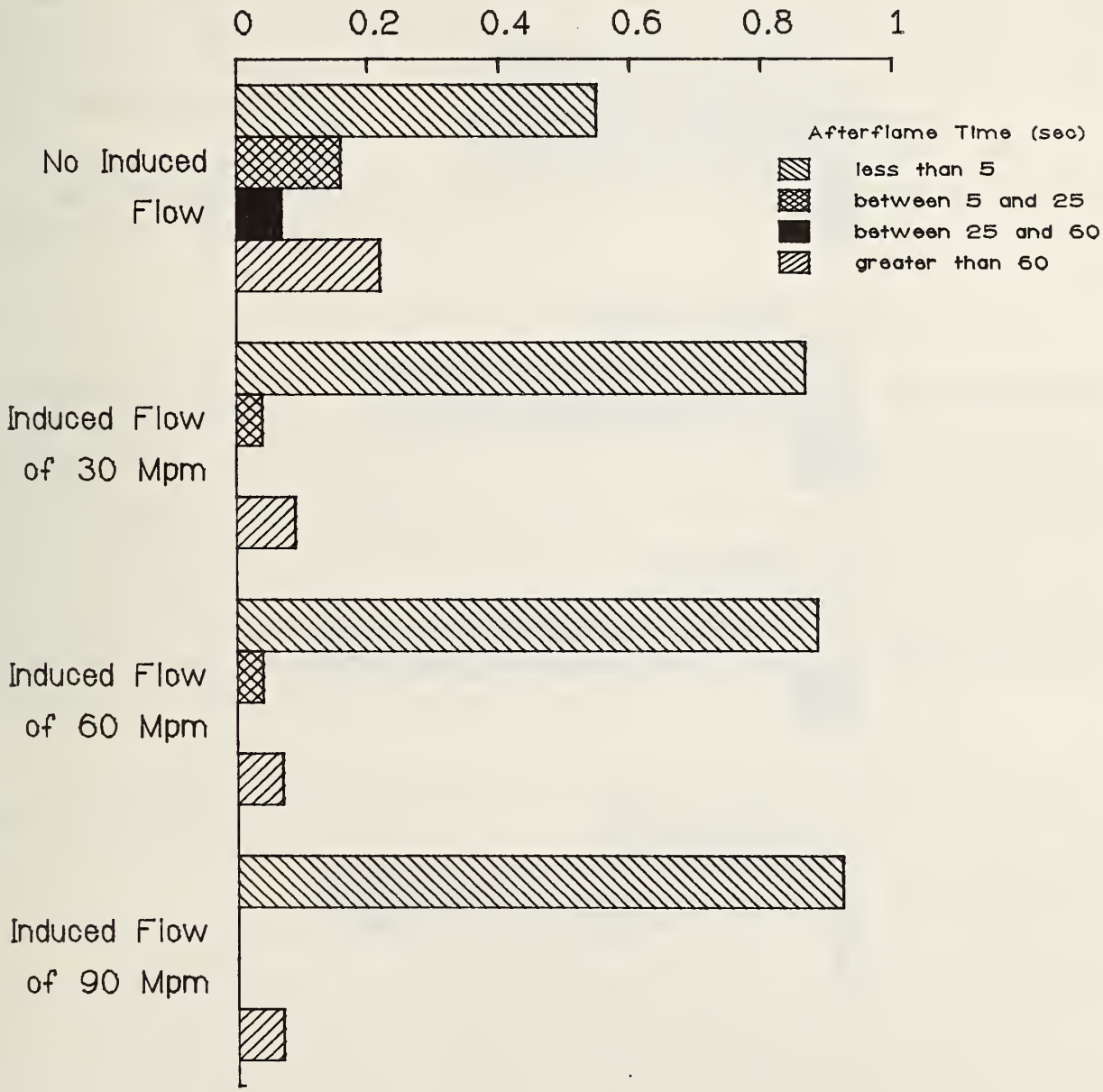

Figure 6 – Frequency distribution of afterglow time for all belts tested at several induced air flow rates

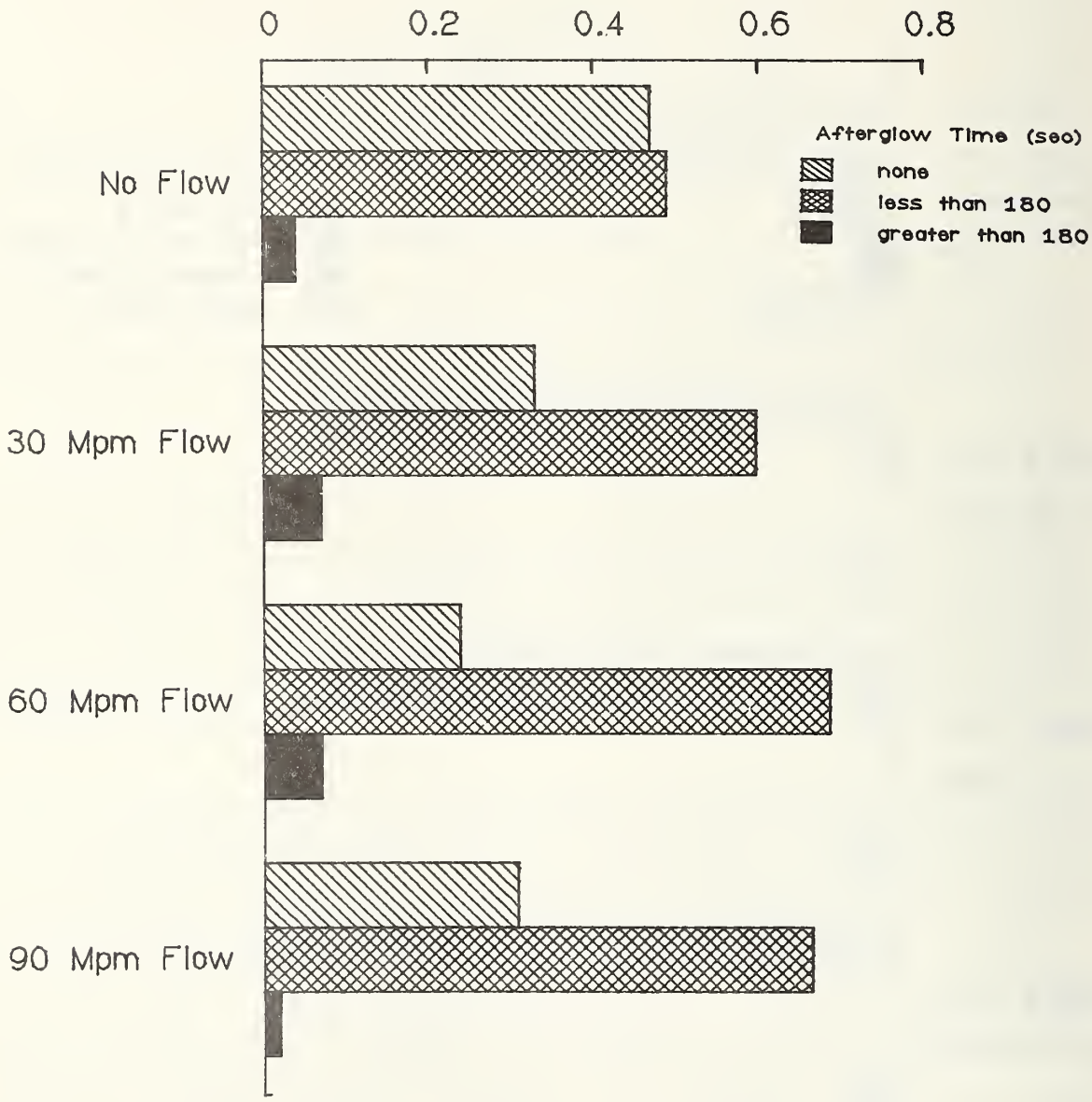

Figure 6 is a frequency distribution of afterglow times. The data was divided into three categories; no afterglow, an afterglow time less than or equal to 180 seconds, and an afterglow time greater than 180 seconds. The number of samples exhibiting an afterglow increased with increasing flow rate until 60 Mpm. At 90 Mpm the afterglow was seen on fewer samples, 67 percent as compared to 69 percent. The number of samples having no afterglow also increased when the flow was increased from 60 to 90 Mpm, to 24 and 31 percent, respectively. The number of nonacceptable samples was also lowest at the highest airflow rate in contrast to the other three conditions.

Maximum afterflame time occurred under the nonforced flow regime, while afterglow was most persistent at 60 Mpm.

6.2 Time to Steady-State Flow

While the regulations define the steady-state airflow in the cabinet during testing and MSHA has defined inlet port configuration, the lag time from the initiation of the blower motor to the establishment of steady-state flow is undefined. The importance of defining the time lag to steady-state flow was investigated by selecting four conveyor belt samples (13, 14, 26, and 34) and exposing them to several different airflow acceleration rates. These samples were selected because under standard test conditions they exhibited approximately the same afterflame time, 2 to 5 seconds. (A natural gas burner was used with 93 percent methane.)

The maximum acceleration rate obtainable on the NBS apparatus was 2700 Mpm^2. The acceleration rate was varied by varying the rate of applied voltage to the blower motor, thereby, achieving acceleration rates as low as 270 Mpm^2.

Figure 7 shows the effect of variations in the lag time to steady-state flow on afterflame time. The data indicates that as the lag time increases (i.e., acceleration rate decreases) the afterflame time also increases. Of the four samples tested, three samples had afterflame times in excess of the acceptance criterion when the airflow acceleration rate was below 400 Mpm^2. This is consistent with the results described in figure 5 that shows that as the flow rate was reduced the afterflame time also increased.

6.3 Air Inlet and Exhaust Port Configuration

While the regulations define air inlet port design, they are silent when it comes to the design of the exhaust port. Variations that exist in air inlet and exhaust port designs between MSHA and various industry laboratories have

Figure 7 - Effect of startup time of air blower on afterflame time

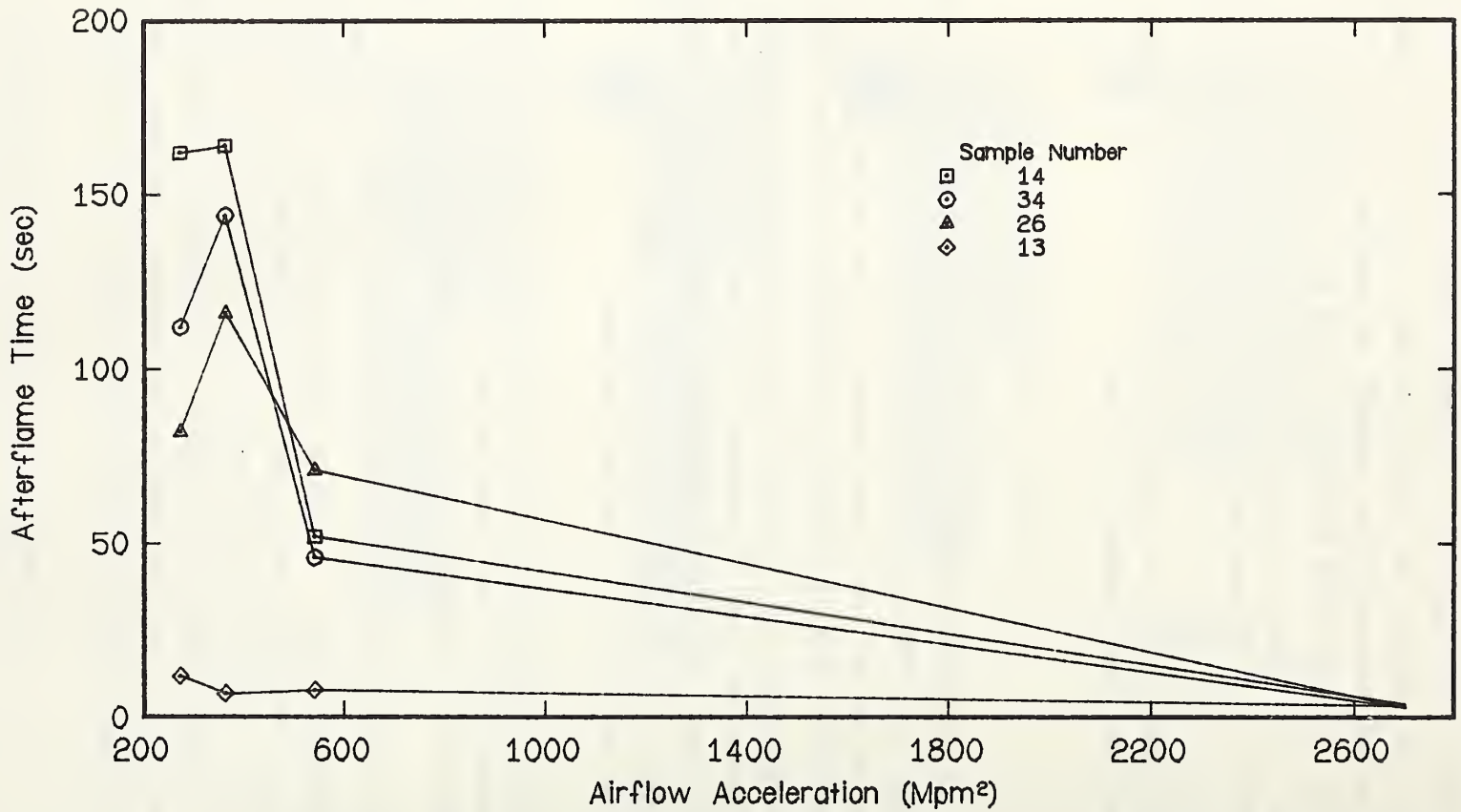

been assumed to be one cause of variability in test results. The inlet port on the NBS apparatus is made from a 20.0 cm long cone with a large end diameter of 19.0 cm and a small end diameter of 10.2 cm. The exhaust port is made from a 10.2 cm circular cylinder 19.0 cm long with the blower motor mounted in the end of the exhaust port. The MSHA apparatus, about which the regulations were written, has a circular tapered inlet port having a maximum diameter of 40.6 cm and a minimum diameter of 2.6 cm (ASME 16-8½). The exhaust port is rectangular (22.6 x 27.9 cm) tapering to a 15.2 cm diameter connector for the blower mounting.

The effects of port configuration on afterflame time were investigated by conducting tests on MSHA and NBS equipment using conveyor belt samples supplied by MSHA. The same test procedures were followed and the operators were rotated. The materials were two multi-ply SBR conveyor belts from different manufacturers. Ten specimens were tested in each direction, warp and weft, for each belt.

The test results are tabulated in table 6. A comparison of operator performance on the two apparatuses indicates that no real difference exists except for material 2 in the weft direction. The data obtained on the MSHA apparatus shows a marked dependence on the operator. However, the difference was not so large that the material's acceptability was affected. The same might not be true had the tests been conducted using a marginal sample.

A comparison between apparatuses, however, shows that the NBS equipment produced shorter afterflame times than the MSHA equipment. The differences, while not affecting acceptability, can be traced to the longer lag time in the establishment of steady-state flow in the MSHA system. The MSHA system required approximately twice the amount of time to achieve steady-state flow. The previous data indicated that a reduction in the acceleration rate increased the afterflame time. It is estimated that the MSHA system has an acceleration rate of 1100 Mpm^2. This compares with 2700 Mpm^2 for the NBS system. The extent of the dependence of afterflame on acceleration cannot be predicted, but the data indicates that the shift in the data in table 6 is in the correct direction.

Inlet and exhaust port design appear to have a minimal, if any, effect on material performance, as long as the sample is in the center of the flow pattern.

Table 6. Comparative Results of Two Conveyor Belts Tested on MSHA and NBS Equipment, With Two Operators

Material	Equipment	Operators			
		A		B	
		Afterflame (sec)	Afterglow (sec)	Afterflame (sec)	Afterglow (sec)
1 Warp	NBS	0.0	3.8	0.0	0.0
	MSHA	0.5	0.0	2.6	0.0
1 Weft	NBS	0.0	2.2	0.0	0.0
	MSHA	1.3	0.0	3.3	0.0
2 Warp	NBS	2.1	0.0	1.1	0.0
	MSHA	11.2	0.0	7.4	0.0
2 Weft	NBS	2.3	0.5	1.6	0.0
	MSHA	9.1	0.0	5.0	0.0

7. CONCLUSIONS

Various parameters of the MSHA test were varied to determine their effect on test results. Variations in such parameters as the gas used as the fuel, the exposure time, and flame height had very little impact on mean values of afterflame and afterglow time. However, variations in the airflow rate and acceleration affected afterflame times. Also, the use of a large orifice burner (1.92 mm) appeared to produce longer afterflame times than the results obtained with a natural gas burner.

Afterglow was also affected by the airflow rate and burner orifice size. The number of specimens exhibiting glowing behavior decreased with decreasing airflow rate. The larger orifice burner produced shorter afterglow times than the natural gas burner.

8. RECOMMENDATIONS

In order to improve the reproducibility of the test method, it is recommended that the MSHA test procedure be modified to:

- require that the airflow not be applied until flaming on the specimen extinguishes and

- the use of an artificial gas burner be clearly defined.

APPENDIX F

Standard Test Procedure for the Flammability of Conveyor Belts for Use in Underground Coal Mines

1. SCOPE AND APPLICATION

This standard provides a test method to determine the flammability of conveyor belting intended for use in coal mine operations.

2. DEFINITIONS

a. "Afterflame" means the continuation of flaming after the removal of the ignition source.

b. "Afterglow" means the continuation of glowing of parts of a specimen after flaming has ceased.

c. "Sample" means four test specimens, two cut parallel to the warp and two cut parallel to the weft.

d. "Specimen" means a 15.2 x 1.3 cm by full thickness (6 x .5 inches by full thickness) section of conveyor belting or hose.

e. "Test criteria" means the maximum average afterflame time and afterglow time which a sample may exhibit in order to pass the test.

f. "Item" means a conveyor belt submitted for testing under the provisions of the Coal Mine Health and Safety Act.

3. GENERAL REQUIREMENTS

a. Summary of test method. Conditioned specimens shall be suspended one at a time horizontally in a prescribed cabinet and subjected to a standard flame along their free edges for a specified time under controlled conditions. After the exposure period and extinguishment of flames on the sample, a standard airflow shall be applied along the longitudinal axis of the specimens for a specified time. The afterflame and afterglow times shall be recorded.

b. Test criteria. The test criteria when the testing is done in accordance with the prescribed Sampling Procedures (4) and Test Procedures (5) are:

1. The average afterflame time of four specimens shall not exceed 1 minute.

2. The average afterglow time of four specimens shall not exceed 3 minutes.

4. SAMPLING PROCEDURES

Four specimens shall be cut from an item submitted for testing.

a. Two specimens shall be cut in the warp direction such that no warp and weft sections are common to each.

b. Two specimens shall be cut in the weft direction such that no warp and weft sections are common to each other or the warp specimens.

5. TEST PROCEDURE

a. Apparatus. The following test apparatus has been found to be acceptable for this test. An alternate test apparatus may be used with prior approval of the Mine Safety and Health Administration.

1. Test chamber. The test chamber shall be a steel cubical cabinet with inside dimensions of 53.3 cm (21 in) in each direction. The front of the cabinet shall be a close-fitting door with a transparent insert to permit observation of the entire test. A mirror shall be mounted on the back wall of the test chamber to permit a rear view of the specimen through the viewing door. An air inlet nozzle shall be mounted on one side of the chamber [an ASME flow nozzle with a 40.6 cm-21.6 cm (16-8½ in) reduction or suitable equivalent], and an exhaust port with an electric fan shall be mounted on the opposite wall. The electric fan, with an airflow control, shall be able to produce an airflow across the horizontal surface of the specimen of 91 Mpm (300 fpm). A capped access port shall be provided for inserting an anemometer to measure airflow velocity. A suitable cabinet for use in this test method is detailed in figures 1 and 2.

Figure 1.

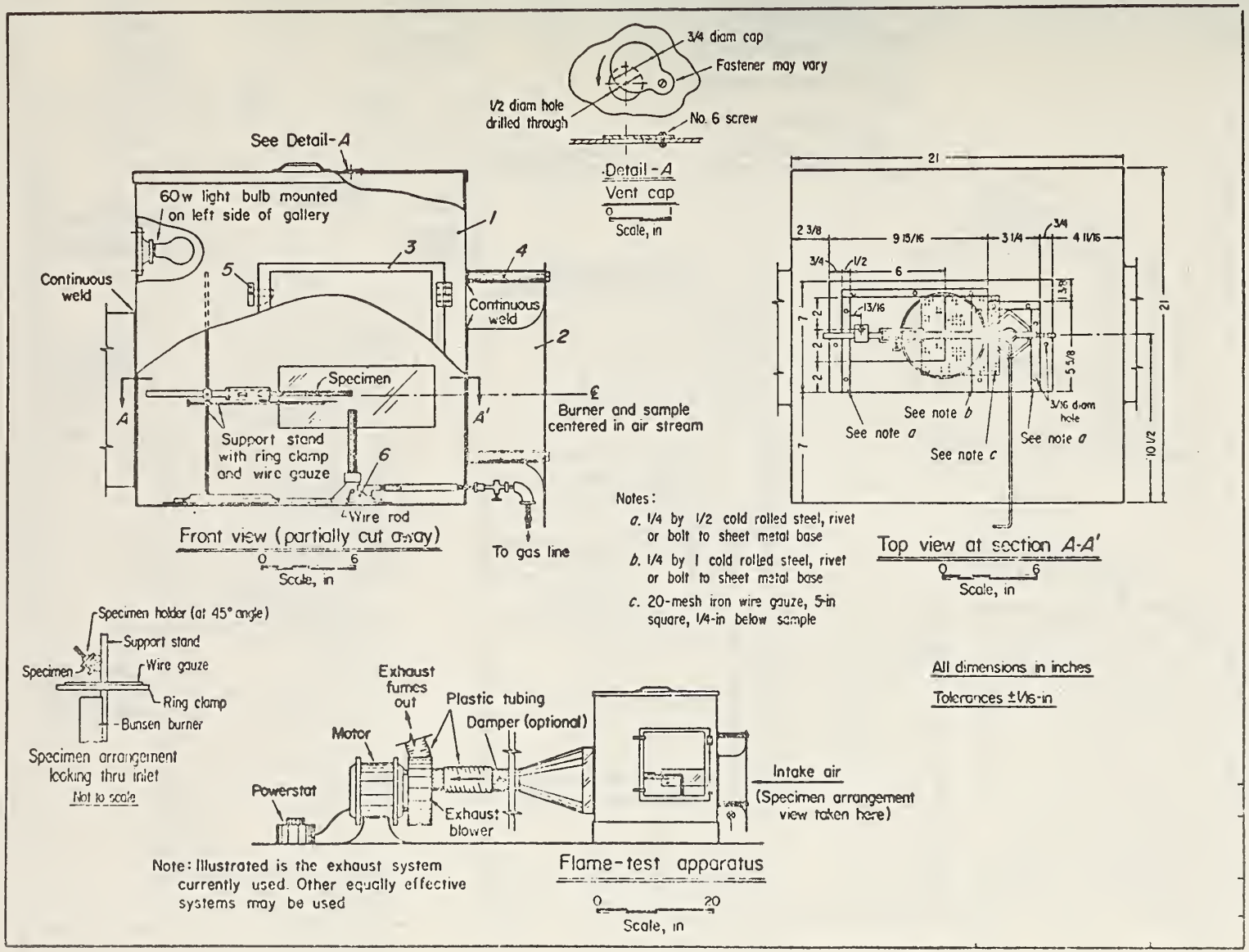
3/4 diam cap
Fastener may vary
1/2 diam hole drilled through
No. 6 screw
Detail-A
Vent cap
Scale, in
See Detail-A
60w light bulb mounted on left side of gallery
Continuous weld
Continuous weld
Specimen
Support stand with ring clamp and wire gauze
Wire rod
Burner and sample centered in air stream
To gas line
Front view (partially cut away)
Scale, in
See note a
See note b
See note c
See note a
3/16 diam hole
Top view at section A-A'
Scale, in
Notes:
a. 1/4 by 1/2 cold rolled steel, rivet or bolt to sheet metal base
b. 1/4 by 1 cold rolled steel, rivet or bolt to sheet metal base
c. 20-mesh iron wire gauze, 5-in square, 1/4-in below sample
All dimensions in inches
Tolerances ±1/16-in
Specimen holder (at 45° angle)
Support stand
Wire gauze
Specimen
Ring clamp
Bunsen burner
Specimen arrangement looking thru inlet
Not to scale
Exhaust fumes out
Plastic tubing
Damper (optional)
Motor
Powerstat
Exhaust blower
Intake air
(Specimen arrangement view taken here)
Flame-test apparatus
Scale, in
Note: Illustrated is the exhaust system currently used. Other equally effective systems may be used

Figure 2.

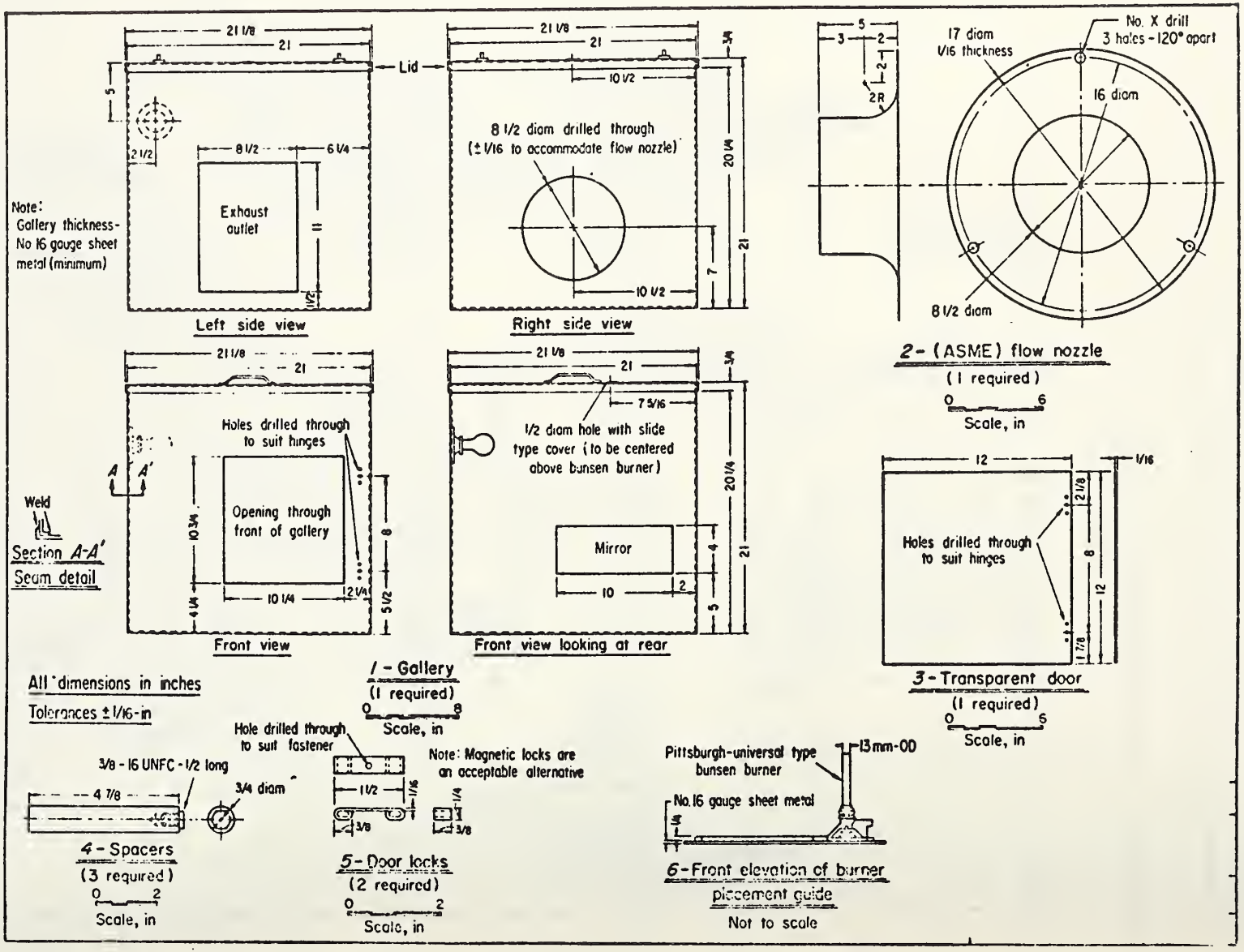
Lid
Exhaust outlet
Note: Gallery thickness - No 16 gauge sheet metal (minimum)
Left side view
8 1/2 diam drilled through (± 1/16 to accommodate flow nozzle)
Right side view
17 diam 1/16 thickness
No. X drill 3 holes - 120° apart
16 diam
8 1/2 diam
2 - (ASME) flow nozzle
(1 required)
Scale, in
Holes drilled through to suit hinges
Opening through front of gallery
Weld
Section A-A'
Seam detail
Front view
1/2 diam hole with slide type cover (to be centered above bunsen burner)
Mirror
Front view looking at rear
Holes drilled through to suit hinges
3 - Transparent door
(1 required)
Scale, in
All dimensions in inches
Tolerances ± 1/16-in
1 - Gallery
(1 required)
Scale, in
Hole drilled through to suit fastener
Note: Magnetic locks are an acceptable alternative
3/8 - 16 UNFC - 1/2 long
3/4 diam
4 - Spacers
(3 required)
Scale, in
5 - Door locks
(2 required)
Scale, in
Pittsburgh-universal type bunsen burner
13mm-OD
No. 16 gauge sheet metal
6 - Front elevation of burner placement guide
Not to scale

2. Specimen holder. A suitable specimen holder for use in this test method is detailed in figure 2. It shall be located in the central portion of the cabinet. It shall permit suspension of the specimen with its long axis horizontal and the short axis inclined at 45° to the horizontal. The lower edge of the specimen shall be 2.5 cm (1.0 in) above the highest point of the barrel of the gas burner when the burner is in the test position. A clamp shall be provided to facilitate mounting of the specimen. A 20-mesh iron wire gauze, with a maximum of 13 cm (5 in) on a side, shall be clamped in a horizontal position .64 cm (1/4 in) below the lower edge of the specimen and with about 1.3 cm (1/2 in) of the specimen extending beyond the edge of the gauze.

3. Burner. A bunsen type burner with an inside tube diameter of 11 mm (0.4 in) shall be used as the ignition source. It shall have an orifice plate in its base with a diameter of 1.90 ± .05 mm. The input line to the burner shall be equipped with a needle valve for adjusting the height of the flame. The burner shall be mounted in a slide guide which is affixed to the floor of the cabinet to permit rapid application and withdrawal of the burner from below the specimen. The slide guide shall have a stopping mechanism that shall insure that the burner is directly beneath the specimen when the external burner control arm is moved to apply a flame to the specimen. The burner shall be connected to the gas source by rubber or other suitable flexible tubing.

4. Fuel. The gas used as fuel for the bunsen burner shall contain at least 96 percent methane by volume.

5. Stopwatch. A stopwatch or similar timing device shall be used to measure time to 0.1 second.

6. Scale. A linear scale graduated in mm or 0.1-inch divisions or similar device shall be used to measure the height of the bunsen burner flame. A suitable gauge may be permanently affixed to the inside wall of the cabinet or affixed to the burner tube for this purpose.

7. Anemometer. An airflow measuring instrument capable of recording an airflow of 91 Mpm (300 fpm) ± 5 percent shall be used. A suitably calibrated hot wire-type anemometer should be acceptable.

8. Electric fan. A variable speed electric fan shall be mounted on the exhaust port. The fan shall be fitted with a vent line for exhausting smoke and/or toxic gases produced by testing. The fan shall have a variable speed control that is preset to produce an airflow velocity of 91 Mpm (300 fpm) along the surface of the specimen parallel to the longitudinal axis. This

shall be measured using the anemometer described in 5(a)(7). The electric exhaust fan shall be equipped with an on/off switch that applies and removes full power to the fan's speed control.

b. Conditioning. The specimen, prior to testing, shall be conditioned in air at a temperature between 15°C (60°F) and 32°C (90°F) and a relative humidity less than 55 percent for at least 24 hours.

c. Testing.

1. Calibration. The airflow velocity and flame height shall be verified at the beginning of each testing period or after any unusual interruption in gas, electric, or service.

i. Airflow velocity. The airflow velocity is adjusted by inserting the anemometer through the capped hole provided for this purpose. The bunsen burner is moved to its test position. The anemometer is positioned with its sensor 2.5 cm (1.0 inch) above the center of the bunsen burner, and the bunsen burner is withdrawn. The electric fan's power switch is placed in its "on" position and the variable speed control is adjusted to produce an airflow velocity of 91 Mpm (300 fpm). Power is then interrupted to the fan with the speed control set at 91 Mpm (300 fpm) and the anemometer is withdrawn.

Note: No further adjustments are necessary unless there is a fluctuation in the power source to the fan or the variable speed control has been tampered with. In either case, the airflow velocity calibration procedure must be repeated.

ii. Burner adjustment. With the exhaust fan turned off and using the gas specified in 5(a)(4), adjust the needle valve in the gas line to the burner to produce a flame with a hard blue inner cone of 7.6 cm (3 in) in height. It may be necessary to adjust both air and gas supplies to achieve this condition. A linear scale graduated in 0.1 inch divisions or similar device is used to measure the height of the burner flame.

Note: Prior to preforming burner adjustments, the orifice plate located in the base of the burner should be inspected to verify that it is clean and unobstructed and is of the correct size.

2. Specimen burning and evaluation.

i. Specimens shall be mounted in the test cabinet one at a time. The cabinet door shall be closed and the burner flame impinged on the free end of the specimen for 1 minute. Flame impingement is accomplished by moving the burner under the specimen for this length of time, and then removing it.

ii. Beginning with the removal of the burner, afterflame time and afterglow time shall be measured.

iii. After the specimen ceases to flame, electrical power is supplied to the exhaust fan. The sample shall remain in the air current for at least 3 minutes to determine the presence of afterglow. If a glowing specimen exhibits reignition within the additional 3 minutes, the duration of flame shall be added to the original afterflame time. The test is terminated when all flaming and glowing on the specimen ceases.

iv. The products of combustion shall be exhausted before opening the door and removing the specimen.

3. Report. The values of afterflame and afterglow times shall be reported for each specimen, as well as the average times for each set of four specimens.

NBS-114A (REV. 2-80)

U.S. DEPT. OF COMM. BIBLIOGRAPHIC DATA SHEET (See instructions)	1. PUBLICATION OR REPORT NO. NBSIR 81-2256	2. Performing Organ. Report No.	3. Publication Date December 1980

4. TITLE AND SUBTITLE

ANALYSIS OF FIRE DATA, LARGE-SCALE TESTS, AND SMALL-SCALE TESTS FOR CONVEYOR BELTS USED IN UNDERGROUND COAL MINES

5. AUTHOR(S)

Emil Braun, Robert E. Meade, and Lee R. Smith

6. PERFORMING ORGANIZATION (If joint or other than NBS, see instructions)

NATIONAL BUREAU OF STANDARDS
DEPARTMENT OF COMMERCE
WASHINGTON, D.C. 20234

7. Contract/Grant No.

8. Type of Report & Period Covered

Final Report

9. SPONSORING ORGANIZATION NAME AND COMPLETE ADDRESS (Street, City, State, ZIP)

10. SUPPLEMENTARY NOTES

☐ Document describes a computer program; SF-185, FIPS Software Summary, is attached.

11. ABSTRACT (A 200-word or less factual summary of most significant information. If document includes a significant bibliography or literature survey, mention it here)

An investigation into the requirements and fire test performance of conveyor belts intended for use in underground coal mines was conducted. The aim of this study was to develop recommendations for the Mine Safety and Health Administration (MSHA) on a test method suitable for measuring the fire hazard potential of a conveyor belt in a coal mine environment. A review of incident data, large-scale tests, and small-scale tests was conducted to provide the necessary information. The incident data was analyzed with the goal of developing scenarios that could form the basis for a suitable test or to evaluate the appropriateness of the existing test.

Large-scale tests were reviewed to determine anticipated belt fire performance under "realistic" end-use conditions. The tests showed how geometry, input energy, and ventilation controlled belt fire performance. Small-scale tests were used to provide information on specific fire properties such as ease of ignition, flame spread, and smoke generating potential.

12. KEY WORDS (Six to twelve entries; alphabetical order; capitalize only proper names; and separate key words by semicolons)

Accident data; coal mines; conveyor belts; fire safety; fire tests; flame spread; ignition; test methods.

13. AVAILABILITY

☒ Unlimited

☐ For Official Distribution. Do Not Release to NTIS

☐ Order From Superintendent of Documents, U.S. Government Printing Office, Washington, D.C. 20402.

☒ Order From National Technical Information Service (NTIS), Springfield, VA. 22161

14. NO. OF PRINTED PAGES

106

15. Price

$11.00

USCOMM-DC 6043-P80