MEASUREMENT OF LENARD RAYS

By Lauriston S. Taylor

ABSTRACT

An investigation is described in which the correct measurement of the electron output (Lenard current) from high-voltage cathode ray, or Lenard ray tubes, is attempted.

The evidence presented shows that a Faraday chamber of proper dimensions may be used to measure the Lenard ray current which at any point is shown to be a linear function of the total tube current. The open-plate method of measuring Lenard currents yields results which are consistently too low, although under the conditions here used bear a constant relationship to the Faraday chamber measurements. The open-plate measurements are, therefore, also a linear function of the total tube current. The condenser method of measurement (Thaller) yields measurements above or below those of the Faraday chamber, depending upon the relationship of the atomic numbers of the two plates. Moreover, the current measured by this method is not a linear function of the total tube current, and hence does not bear a constant relationship to the Faraday chamber measurements under the conditions used. Measurements of the range of scattered electrons from Lenard tubes operating at about 160 kv peak, indicate a maximum of about 15 mm in air, which is equivalent to an energy of about 60 electron kilovolts. By means of a variable Faraday chamber described, it is possible to obtain a measure of the velocity distribution of the scattered electrons.

CONTENTS

	Page
I. Introduction	57
1. Early use of Lenard tubes	57
2. Methods of measuring Lenard ray currents	58
II. Experimental investigation	60
1. Tubes and generating equipment	60
2. Apparatus used for comparing Lenard ray measurements	60
3. Measurement of total electron current	63
4. Comparison of open-plate and Faraday chamber methods	64
5. Comparison of condenser and Faraday chamber methods	67
6. Effect of changing the dimensions of Faraday chamber	69
III. Effect of electron scattering	70

I. INTRODUCTION

1. EARLY USE OF LENARD TUBES

In 1925 Coolidge described a high-voltage hot cathode tube of the Lenard type, by means of which high-speed electrons passed through a thin (0.0015 inch) metal window from the tube into the open air.[1] His principal improvement over the original Lenard tube lay in the very large increase in the number and speed of the electrons transmitted through the foil window. He has constructed a cascade tube operating at 900 kv and 2 ma on an induction coil. More recently

[1] W. D. Coolidge, J. Frank. Inst., 202, p. 693; 1926.

Slack [2] has developed a similar tube having a very thin (1 μ) concave glass window and operating up to at least 350 kv in a single stage.

Since the introduction of the Coolidge tube, a wide variety of investigations have been undertaken having in view its applications in the fields of physical, chemical, and biological research. Coolidge and Moore [3] made the first qualitative studies of various effects of the electrons upon substances in air as well as the effects upon animal tissue and bacteria. McLennan [4] and his coworkers have since carried out very extensive studies of their effect upon chemical reactions. In the biological field the most comprehensive studies have been carried out by Schaeffer and Witte,[5] and Baensch and Finsterbusch,[6] of whom the former made the first attempt to apply physical measurements of Lenard ray currents to biological reaction.

The greater part, however, of all of this work has been done with very little accurate knowledge of the magnitude of the Lenard ray quantities involved. The object of the present communication is to describe a study of several methods for measuring the current of the high-speed electrons in air under conditions suitable for general experimental application.

To avoid possible confusion in speaking of the various currents it is well to differentiate between them. By the total current is meant the electron stream leaving the filament irrespective of its ultimate destination. There is also a current composed of high-speed electrons in air, called the Lenard current. Its current density, which is directly proportional to the number density and velocity of the electrons, varies with distance and direction from the window. Most of the measurements described below are in terms of current density.

Experiment shows that it is insufficient and often misleading to measure the electron current at some point outside the tube in terms of the current through the tube and the voltage applied to the tube. While this may be satisfactory for reproducing conditions with a given set-up, many complicating factors render it useless from the viewpoint of reproduction under other slightly different conditions.[7]

2. METHODS OF MEASURING LENARD RAY CURRENTS

Three methods of measuring Lenard ray currents were announced almost simultaneously. Thaller [8] used a modification of a method described by Lenard [9] and shown diagrammatically in Figure 1 (*a*). The high-speed electrons *e* pass through a layer of noble metal *E*, about 0.001 mm thick, deposited on a somewhat thicker layer of copper oxide *C* or other insulating material, to the backing plate *P* and thence through a galvanometer to ground. The current through the galvanometer is then taken as the Lenard current.

The writer [10] has described some preliminary measurements made by the apparatus shown in Figure 1 (*b*) wherein the electrons were allowed to impinge upon a small aluminum plate *E* surrounded by an earthed guard plate *S*, so designed as to avoid error due to electrons

[2] C. M. Slack, J. Opt. Soc. Am., **18**, p. 123; 1929.
[3] W. D. Coolidge and C. N. Moore, J. Frank. Inst., **202**, p. 722; 1926.
[4] J. C. McLennan, Perrin, and Ireton, Proc. Roy. Soc., **125**, p. 246; 1929.
[5] W. Schaeffer and E. Witte, Strahlen., **31**, p. 415; 1929.
[6] W. Baensch and R. Finsterbusch, Strahlen., **33**, p. 399; 1929.
[7] It might be mentioned that, at the outset of this work, a number of erroneous results were obtained due to what later proved to be the improper measurement of the tube current.
[8] R. Thaller, Strahlen., **33**, p. 263; 1929.
[9] P. Lenard, Ann. Phys. u. Chem., **64**, p. 288; 1898.
[10] L. S. Taylor, Radiology, **12**, p. 294; 1929.

entering the space between E and S. The current from plate to ground as measured by the galvanometer was taken as the Lenard current.

Schaeffer and Witte [11] expressed their intensities in terms of the air ionization produced, having made the necessary corrections for the additional ionization produced by the associated X rays. This method aims to obtain a measure of the energy where the preceding deal only with the current; therefore, the measurements can not be directly compared.

The ionization currents produced by Lenard beams are relatively large. For example, consider an electron beam having a current density of only 8×10^{-8} amp/cm^2 (as in some of the work described below), and assume complete loss of velocity of all of the electrons which have an average speed of 125 kv. Using Eisl's [12] value of 32.2 volts loss of velocity to yield one pair of ions, it is found that 1.9 $\times 10^{15}$ ion pairs are formed per second by this stream, which should

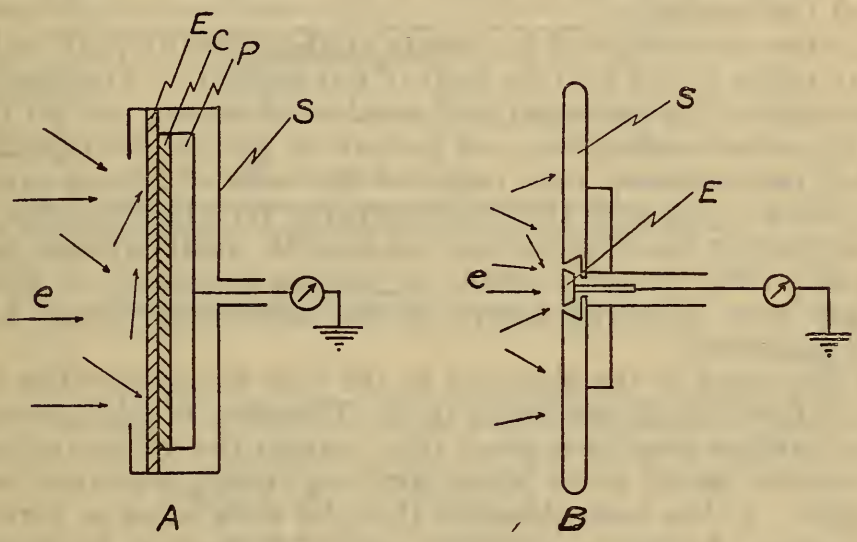

FIGURE 1.—*Lenard ray collectors*

(*a*) Schematic diagram of Lenard-Thaller condenser collector for measuring Lenard rays. (*b*) Cross section of Taylor open plate collector

give a saturation current of 3×10^{-4} amperes per square centimeter—4,000 times the initial electron current.

In spite of the advantage of yielding conveniently large currents, other experimental difficulties, discussed below, render the ionization method of Lenard ray measurement less satisfactory, however, than the electron-current method. In this study we have used a Faraday chamber method as a basis of comparing the first two methods above.

The Lenard current is measured in terms of the unit previously proposed by the author,[13] as that beam having an electron current density of one e. s. u. per square centimeter normal to the direction of the beam. This was called the "lenard" and was designated by the letter L. It is obvious that, due to scattering of the electrons in air, the current density will be essentially uniform only over a very small area. Hence, it was thought desirable to restrict the measurements to the current over an area only 1 cm in diameter rather than some 10 cm as in Thaller's system. The intensity of the beam

[11] W. Schaeffer and E. Witte, Strahlen., **31**, p. 415; 1929.
[12] A. Eisl, Ann. der Physik, **3**, p. 277; 1929.
[13] L. S. Taylor, Radiology, **12**, p. 294; 1929.

striking the center of such a large collector as Thaller's will be very different from that striking the edges, so that in effect he measures an average intensity. As mentioned, this type of measurement is not directly comparable with Schaeffer and Witte's.

II. EXPERIMENTAL INVESTIGATION

1. TUBES AND GENERATING EQUIPMENT

Two types of hot cathode Lenard tubes were used in this investigation. The first was the Coolidge type having a large flat metal foil window supported on a honeycomb grid. The foil was of nickel about 0.03 mm thick. The tube operated continuously on a metal 4-stage mercury diffusion pump. The second tube was of the Slack type having a drawn-in glass window about 0.002 mm thick with an effective opening of about 3 cm diameter. This tube was sealed off the pumps.

Both tubes were designed to operate at about 350 kv peak and were tested by us up to 325 kv (the limit of our system). The window of each was cooled by radiation and conduction alone, and to permit steady continuous operation over periods of several hours comparatively low tube currents were used—of the order of 20 microamperes for the Slack tube and 100 microamperes for the Coolidge tube. When comparing the observations made with small currents against those made using larger currents of shorter duration, no essential differences were observed except in the magnitude of the Lenard currents measured.

Since the range of the electrons in the thin windows varies as the square of their voltage according to the Thomson-Whiddington-Bohr law, it is obvious that for a given tube current the minimum heating of the window would occur when applying strictly constant voltage to the tube. It has been observed that, for such tubes as here used, most electrons having a velocity under 75 electron kilovolts are completely absorbed in the window, and hence are effective only in producing heat and a few X rays. Thus when applying other than constant voltage to the tube only that portion of the wave above 75 kv. is effective in producing the results sought.

Not having available a suitable constant voltage source for this work, a disk mechanical rectifier was used in which rectification occurred over approximately 15° to 20°. For convenience of measurement the anode and window of the tube were at ground potential and a maximum of about 160 kv was applied to the cathode.

Tubes, generating equipment and measuring apparatus were placed for safety in a large room lined with ¼-inch lead, and all controls and indicating instruments were brought outside and so arranged as to permit the variation and measurement of all quantities without the necessity for entering the room. This had the one undesirable feature of requiring very careful electrostatic shielding of all parts of the apparatus to prevent the sensitive galvanometers from picking up electrical disturbances from the mechanical rectifier and high-tension leads.

2. APPARATUS USED FOR COMPARING LENARD RAY MEASUREMENTS

In order to facilitate the comparison between the three systems outlined above, namely, Thaller's condenser system, Taylor's open

plate system and the Faraday chamber, a single Lenard ray collector was designed in such a manner as to readily measure the electrons according to any one of the methods.

The collector C in Figure 2 was mounted on a grounded track so as to be movable through a distance of about 25 cm from the tube window L in any direction from zero to an angle of 150° with the axis of the tube. The outer case of the collector, the copper gauze shield S_1, and the tube anode were connected together through a galvanometer G_T to ground. This system was surrounded by a second copper gauze shield S_2 which was grounded. Both S_1 and S_2 were so slotted as to permit the ready movement of the collector along the track.

Figure 3 shows a detailed diagram of the collector used as a basis of comparison. The inner cylinder D, carefully insulated from the

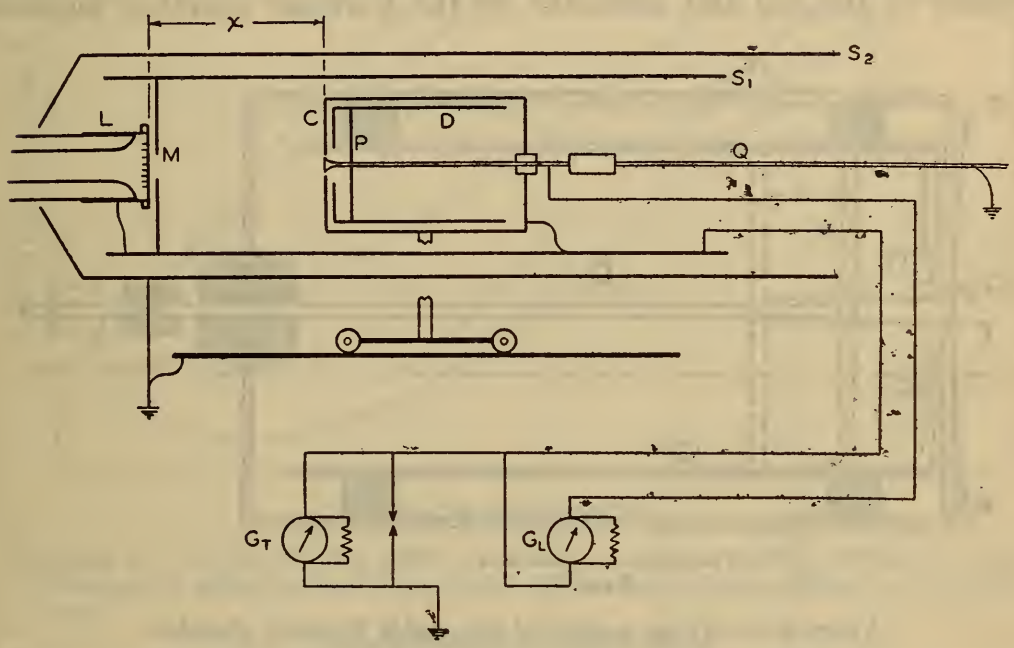

FIGURE 2.—*Diagram of experimental set-up for comparing the condenser, open plate and Faraday chamber methods of Lenard ray measurement*

case C, contained a plunger P which could be moved by means of the rod Q from outside the lead room. Both inner cylinder and plunger were connected through the galvanometer G_L to the galvanometer circuit G_T as indicated. Galvanometers, all lead wires, shunts, etc., were completely surrounded by earthed shielding. Thus the galvanometer G_T indicates the total electron current of the tube, made up in part of the small electron current to the Faraday chamber as measured by G_L. A current measuring system placed thus in the grounded circuit is preferable when dealing with currents as small as those here involved, since it does not measure any of the corona losses in the high-tension circuit.

The complete collector is essentially a large adjustable Faraday chamber. The plunger P supports a collector F of which the outer end having a diameter of 9.8 mm passes through the opening O_2 in the outer case C, with a clearance of 0.1 mm. The Faraday cylinder D has its front end G adjustable in position along the axis so as to vary the spacing between C and G. The openings O_1 in the Faraday

chamber and O_2 in the case are tapered in such a manner that all the electrons (except those at a glancing angle) incident on the plane of O_2 will pass into the chamber when the plunger is drawn back. On the front of the outer case is a thin tapered ring by means of which thin metal covers may be securely clamped over the opening O_2.

This system may be used for any of the three methods described above. By placing the collector F flush with the outer face of the case we have the open-plate system. By moving the plunger back into the cylinder D, a Faraday chamber is obtained. To obtain Thaller's condenser system, a thin metal foil and insulator may be clamped under the ring R and then F moved up to just bear on the insulator under the foil. Moreover, by moving the plunger back while the opening O_2 is covered we can effectively measure the transmission of the foil and insulator by the Faraday chamber method.

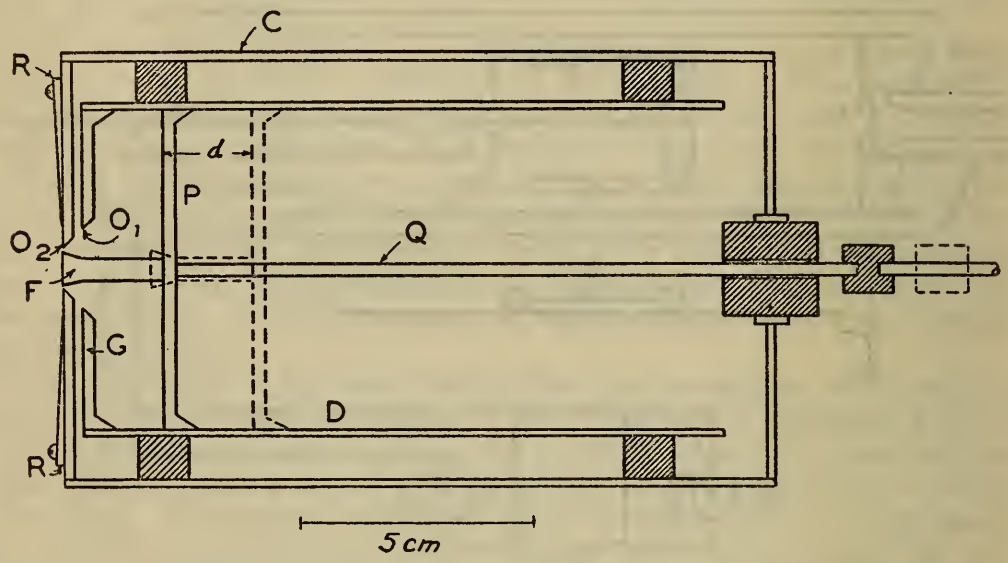

FIGURE 3.—*Cross section of adjustable Faraday chamber*

Broken lines indicate position of plunger when drawn back. (Cross section indicates hard rubber).

Care must be taken to properly identify any currents measured, since the total tube output may be considered as made up of a number of separate parts. A correct measure of the tube current is not obtained by measuring simply the current between anode and ground, since this does not measure the electrons that pass through the window. The total tube current consists of the following parts: (1) the current to the anode (including the window), of which a large part is due to electrons scattered from the primary cathode beam within the focusing tube; (2) the current to the diaphragm M (fig. 2); (3) the electrons scattered back of M striking the outer conducting wall of the tube; (4) the electrons striking the shield S_1 and the Faraday case front C; and (5) the electrons entering the Faraday cylinder D. If the shields S_1 and S_2 are removed the part 4 will be reduced while part 3 will be increased. Moreover, the amount of these changes will depend to a considerable extent upon the relative positions of the diaphragm M and the Faraday case C.

Figure 4 shows a series of curves of the Lenard current, measured with the open plate collector, as it varies with total tube current

for a fixed voltage on the tube. These are given to indicate, without going into detail, the necessity for careful shielding and the elimination of stray potentials in the system. Curves *a*, *b*, and *c* were taken with both shields S_1 and S_2 (fig. 2) removed: *a* with the center electrode at exactly the same potential as the case; *b* and *c* with the center electrode maintained at about 0.5 volt above and below the case potential respectively. The slight displacement from the origin was due to stray field disturbance. Curve *d*, taken with only S_2 removed, is linear, but passes far from the origin due to an excessively

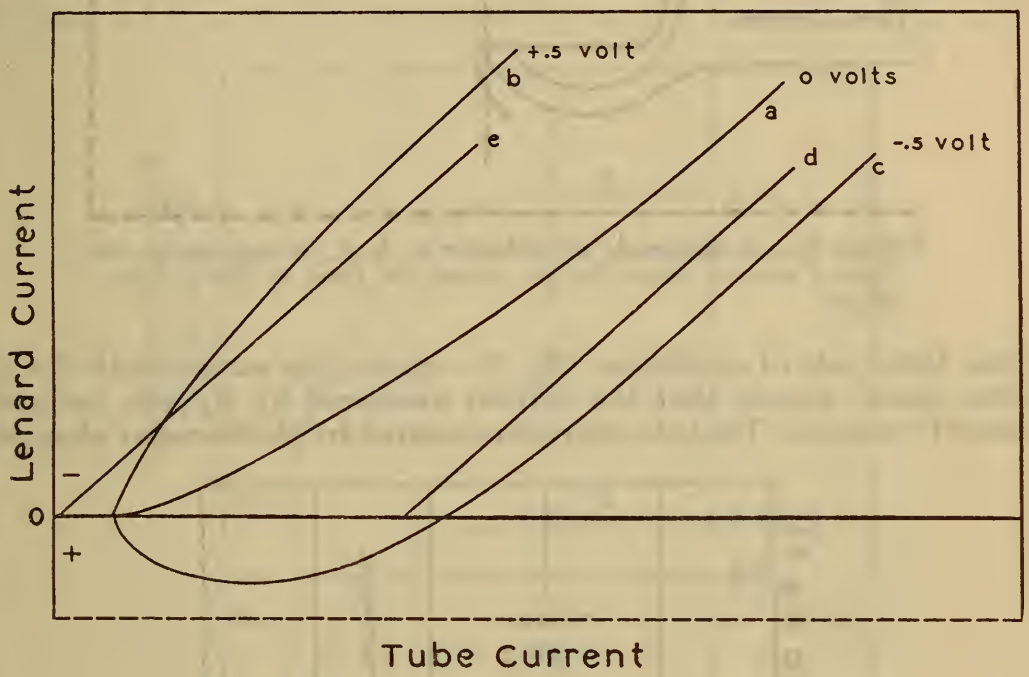

FIGURE 4.—*Curves showing effect on Lenard current readings caused by poor electrostatic shielding and by potential differences between collector and guard ring.*

Scales of same order as in later figures.

large field disturbance picked up by S_1. Curve *e* for a completely shielded system is linear and passes through the origin.

3. MEASUREMENT OF TOTAL ELECTRON CURRENT

The first point investigated was the correctness of the indications of the Faraday chamber. Since the entire space (outside and inside the chamber) is highly ionized it must be assured that the net flow of current to the collector is simply the primary electron current—that other positive and negative ions either recombine or reach the collector in equal numbers.

One way of testing this is by measuring the apparent total tube output current, say, as a function of the filament current, while varying over wide limits the air volume in front of the tube. This was accomplished in the case of the Slack tube by inserting first a closed lead cylinder *a* (fig. 5) into the window so that there was practically no volume of air to be ionized; second, covering the opening with a flat plate *b* so that only the space inside the mouth of the window was ionized; and third, inclosing a large volume of air in front of the tube

with a can *c*. With the Coolidge tube a can only was used. A plot of the total tube current as a function of the filament current for

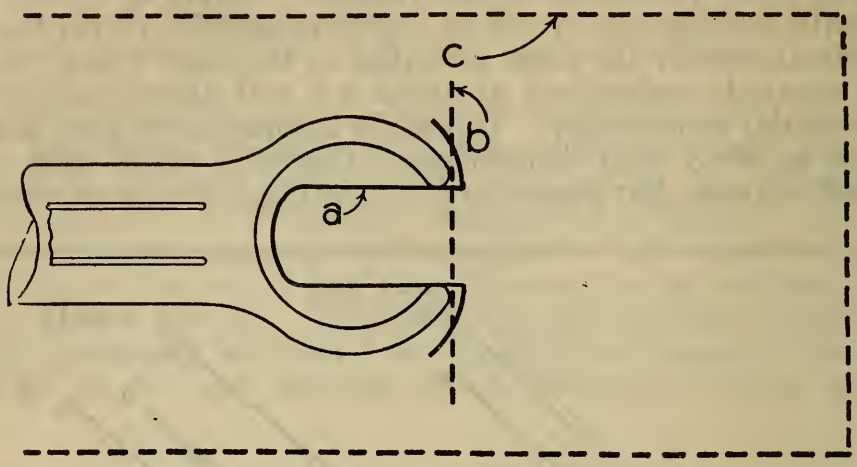

FIGURE 5.—*Arrangement of collectors a, b, c, for measuring total Lenard current when the air volume in front of Slack tube is varied*

these three sets of conditions (fig. 6)—giving the same results for all three cases—proves that the current measured by G_T was the total Lenard current. That the current measured by the Faraday chamber

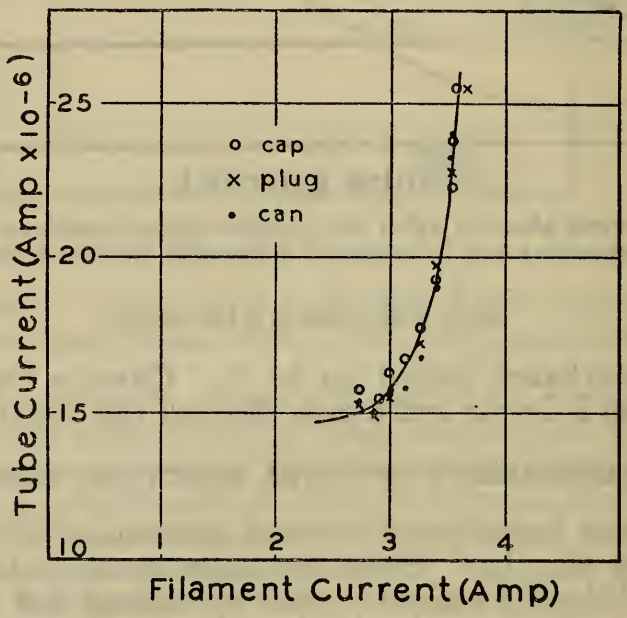

FIGURE 6.—*Total Lenard current as a function of filament current*

is a definite fraction of the total, is supported by mutually consistent results discussed below.

4. COMPARISON OF OPEN PLATE AND FARADAY CHAMBER METHODS

The next point investigated was the effect of moving the collector *F* back from the position where it was flush with the outer case. Two curves *A* and *B* (fig. 7) show the change in current to the Faraday chamber as a function of the distance *d* between *F* and the front face of the outer case *C* (fig. 3). It will be noticed that the current for

values of d greater than about 1.5 cm, is about 33 per cent greater than for conditions where F and C are flush.

To avoid confusion in speaking of the currents measured by G_L for different positions of the collector F, the currents will be identified as follows: (a) When the collector is flush with the outer case, as the plate or collector-plate current; (b) when the current no longer changes with d, as the complete or complete Faraday current; and (c) when the current is intermediate between the two cases above, as the intermediate current.

Two cases where the distance x between C and the Lenard tube window is 1.0 and 1.5 cm are shown by curves A and B, respectively.

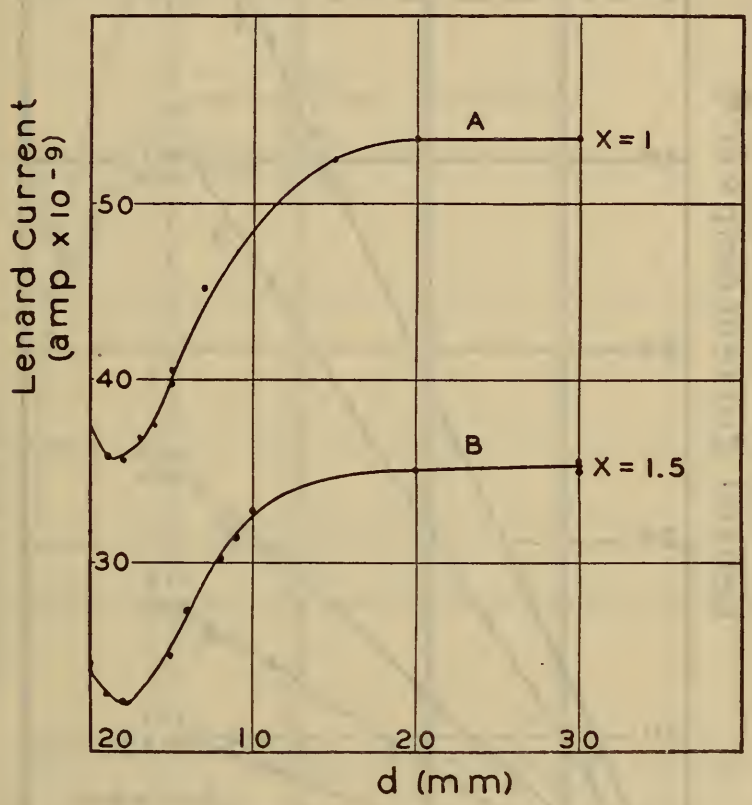

FIGURE 7.—*Lenard current as a function of the distance d which the plunger is withdrawn, for two distances x between collector face and tube window*

Other conditions remaining the same, the ratio between the plate and complete currents was approximately the same for all values of x and all tube potentials used. Since the velocity distribution of the electrons in the beam subtended by the opening O_2 will vary with both tube potential and the distance x—hence, the ionization-intensity distribution will vary with both—it may then be safely assumed that the form of the curves in Figure 7 is not due to positive or negative ions.

The minimum always appears at d about 2 to 3 mm and the saturation current is reached when d reaches 20 mm, for the particular arrangement of the inner cylinder. Both of these points may be shifted slightly by changing the size of O_1 or the distance between O_1 and O_2. The minimum may be explained as due to the fact that as the collector F recedes, the opening O_2 prevents electrons from striking it at the more grazing angles. The subsequent gradual approach to a complete Faraday current at $d = 20$ mm is due to the

gradual reduction in scattering of electrons from the face of F to the edges of the opening O_2, or even entirely out through O_2.

Figure 8 gives representative curves showing the current as a function of the total tube current for four different distances x (10, 20, 30, 40 mm) from the tube window and two different distances d (0, 30 mm) of the collector plate F for each value of x. Since from these it is seen that the ratio of the two currents at any one value of x is the same for all tube currents; and further, since it is found that

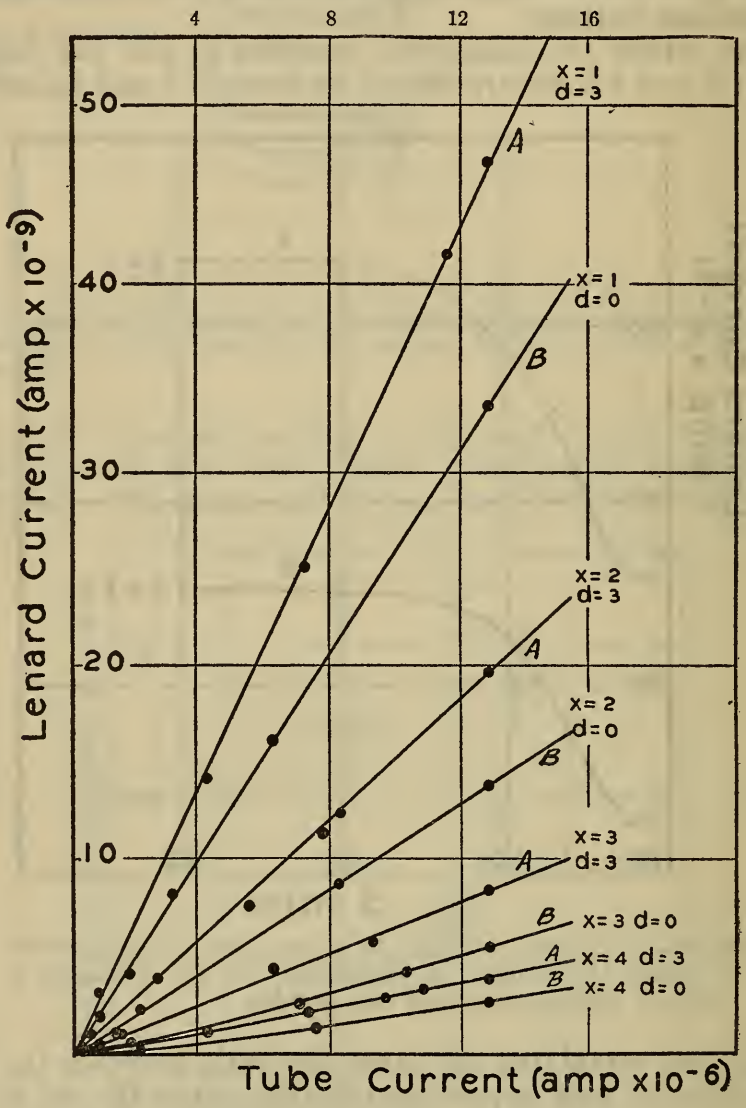

FIGURE 8.—*Lenard current as a function of tube current for different values of x and d*

The ratio of the A curves to the corresponding B curves is the same for all values of x. Values of x and d indicated in centimeters

the ratio of the two currents at any one value of d and any two values of x is the same for all tube currents, it is to be concluded that the ionization density in front of the collector, which must change greatly over this range of conditions, does not affect the measured magnitudes. Curve A, taken for $d=30$ mm is seen to be about 33 per cent greater than curve B taken with $d=0$, which is in good agreement with the curves shown in Figure 7.

We may conclude from these results, that the open plate measurement of any Lenard current bears a constant ratio to the Faraday chamber measurement.

5. COMPARISON OF CONDENSER AND FARADAY CHAMBER METHODS

To test the condenser method of Lenard current measurement (Thaller), the opening O_2 was covered with a 0.01 mm aluminum foil clamped in place by means of the ring R. (Fig. 3.) The collector F was then moved back just sufficiently to prevent contact with the foil (about 0.02 mm) forming a condenser with an air dielectric and having as plates the aluminum foil and the collector F. As seen by Curve I

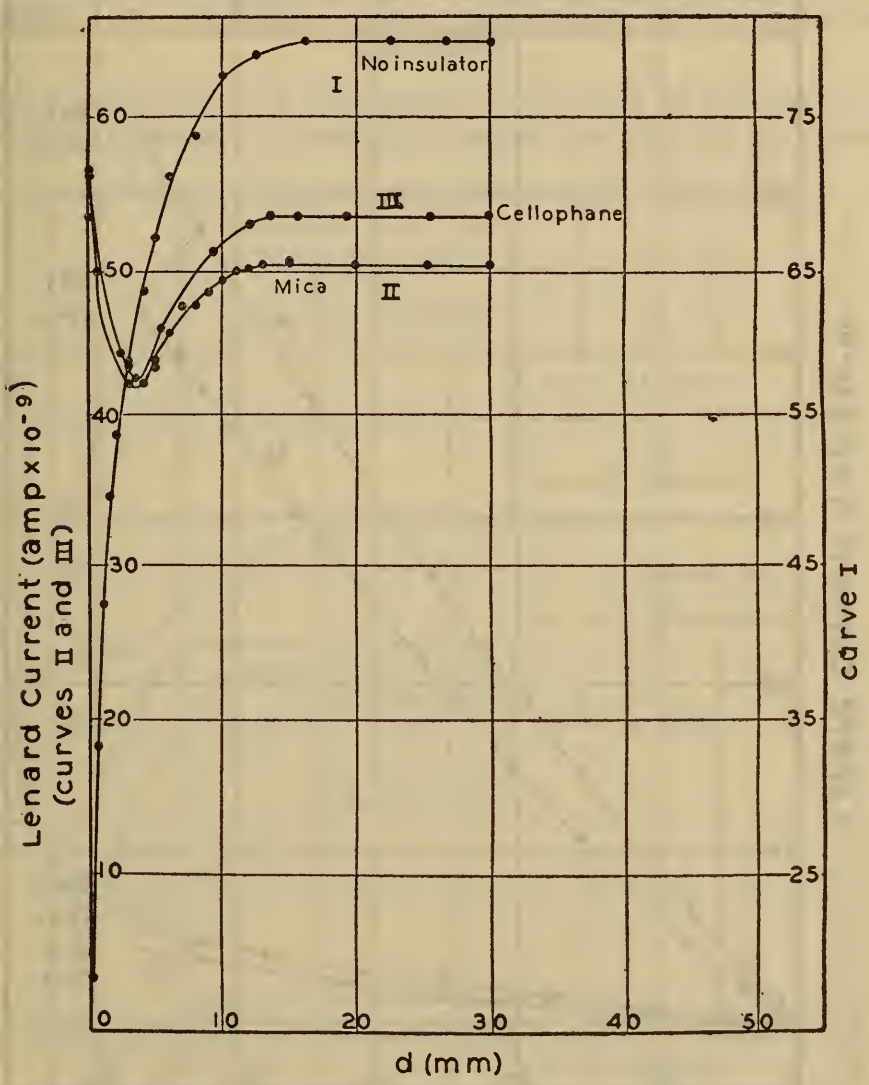

FIGURE 9.—*Lenard current as a function of the distance d for different dielectrics between the aluminum collector window and plunger*

in Figure 9 the Lenard current I_L for $d=0.02$ mm. is very small, but increases rapidly to a complete value several fold larger at $d=20$ mm.

To reproduce Thaller's method more closely, the alumium foil was backed with a mica sheet 0.015 mm thick to serve as a solid dielectric in place of the air, and the collector F then placed in close contact with the mica. Curve II in Figure 9 shows the Lenard current I_L as a function of d, whence it is seen that the complete value of I_L for this particular case is some 12 per cent lower than the plate ($d=0$). It is also noticed that the intermediate current I_L passes through a minimum, as in the case of the open Faraday chamber. Curve III taken with a 0.027 mm layer of cellophane in place of the mica shows

a similar curve—reaching a minimum and complete value for exactly the same values of d. It should be pointed out that the equal values of I at the minimum is accidental and, in general, will differ for different thicknesses of the dielectric. Also the ratio of plate to complete value of I_L will vary with the dielectric thickness used.[14]

Contrary to the case of the open plate, the plate and complete currents are not linear functions of the tube current. Plotting, as in

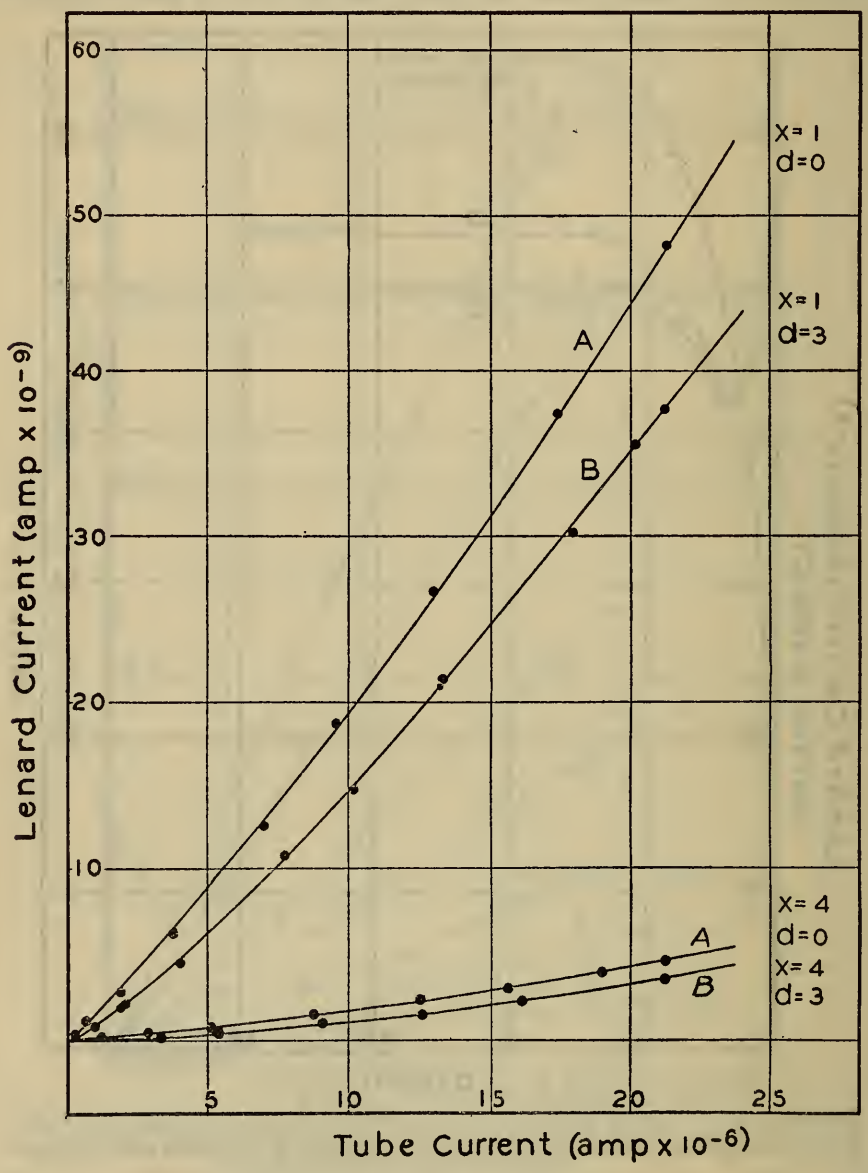

FIGURE 10.—*Lenard current as a function of the tube current for the condenser collector*

The ratio between curves A and B are the same only for the same values of the tube current; x and d are indicated in centimeters.

Figure 8, I_L, against the total tube current (as the filament current is varied) the curves shown in Figure 10 are obtained; curve A with $d=0$ and curve B with $d=30$ mm. The ratio is found to vary, however, but slightly as I_L increases. Compared, however, with the Faraday chamber or open plate method, the varying ratio eliminates

[14] It might be mentioned that whereas a single sheet of mica has lasted throughout these experiments, cellophane turns yellow and becomes very fragile with a few hours' use at the current densities here employed. As a result a new sample was used for each set of observations with the result that slight discrepancies exist between the curves.

the possibility of reliably determining Lenard currents by Thaller's method. This behavior is to be expected since in the condenser method, electrons will pass through the dielectric at various angles, the absorption in the material will depend upon the degree to which the electrons have a velocity normal to the collector. This will vary with the ionization density in front of the tube, which in turn will vary with the tube emission.

6. EFFECT OF CHANGING THE DIMENSIONS OF THE FARADAY CHAMBER

Before proceeding to a discussion of the form of the curves found above, it is of interest to investigate further the effect of the dimensions

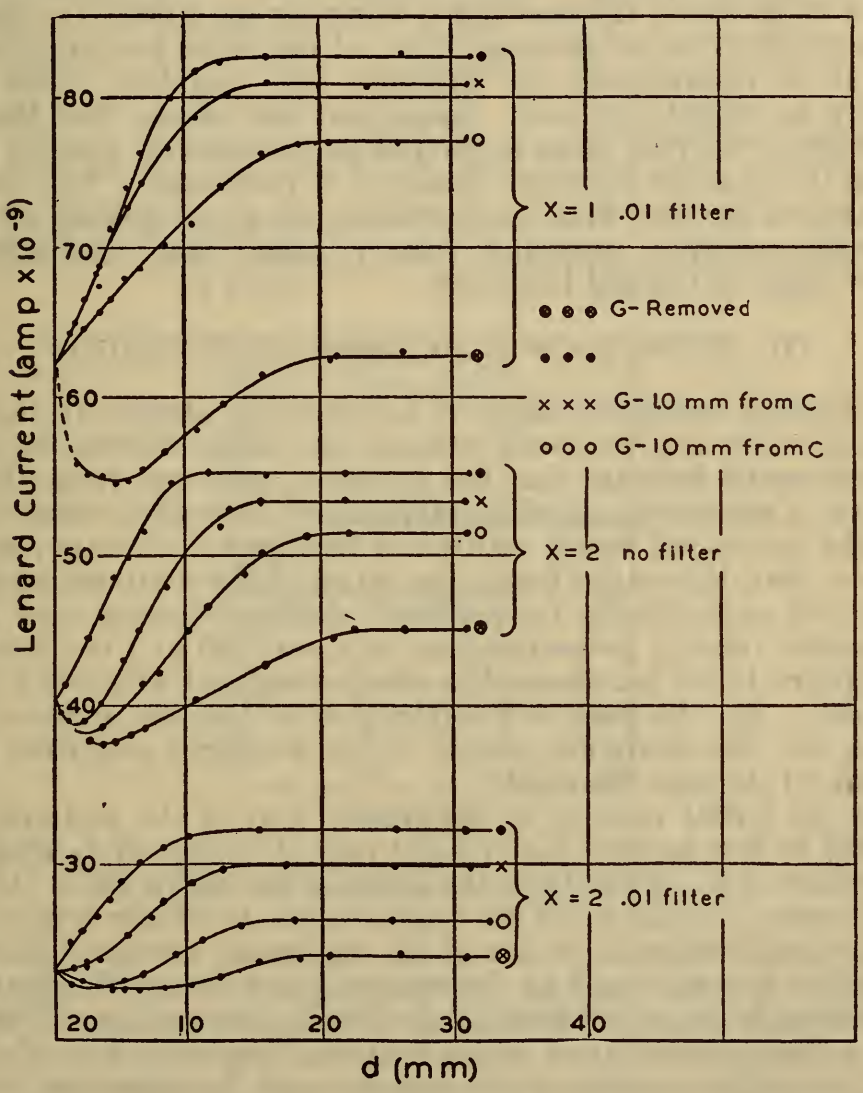

FIGURE 11.—*Lenard current as a function of d for various filters and for various positions of the diaphragm G. (fig. 3). Small solid dots represent G–0027 mm from C*

of the Faraday chamber upon the current measurements. Having found the effect of varying d, that of changing the position of the inner diaphragm G (fig. 3) with respect to the front cover C, using two different qualities of Lenard radiation and two distances x between Lenard tube and Faraday chamber, was sought. The radiation quality was changed by placing a 0.01 mm aluminum filter in the

beam at distances of 3 and 13 mm from O_2 the corresponding positions of the chamber being $x=10$ mm and $x=20$ mm, respectively. In both cases the current I_L to the Faraday cylinder was measured as a function of the displacement d of the collector. The spacing between the plates G and C (fig. 3) was made 10, 1, and 0.027 mm (held apart by a cellophane spacer near the periphery), and G removed entirely.

The resulting curves are given in Figure 11 and need little explanation. In all cases, the curves for G removed have a very much lower complete value than where it is in place. This is to be expected, since a large number of the electrons scattered from the chamber will strike the outer grounded cover C and not become a part of the collector current except for the few rescattered to the wall D of the chamber. As the plate G is moved closer to C the complete currents increase in all cases, the maximum being for the 0.027 mm. spacing. With a chamber so constructed that all electrons incident over the plane of O_2 could enter the collector, the complete value would probably be slightly greater. Inspection also shows that the complete Faraday current point is reached at successively smaller values of d as the spacing between C and G is decreased. This may be attributed to the fact that by decreasing the plate spacing, electrons are prevented from reaching the grounded case (including the beveled edges of O_2) and being lost.

III. EFFECT OF ELECTRON SCATTERING

The definite complete value of I_L occurring always at the same value of d (for a given peak voltage and fixed dimensions of the chamber) would indicate that the electrons scattered from the face of F have a maximum velocity determinable from their range in air. Since the curves all reach saturation at about $d=15$ mm., we may conclude that this is the maximum range of the scattered electrons. (There will undoubtedly be scattered electrons having very nearly their initial velocity corresponding to about 150 kv., but the quantity appears to be immeasurably small compared with the currents here used.) On the basis of Coolidge's data [15] on the range of electrons in air, the maximum energy of the scattered electrons would be about 60 electron kilovolts.

Since the initial velocity of the greater part of the scattered electrons will be low we find the greatest rate of change of I_L with d for small values of d. Thus from the shape of the curve below the complete Faraday current point we might expect to obtain some idea of the velocity distribution in air of the backward scattered electrons, from which in turn could be determined the velocity distribution of the electrons in the initial beam, thus defining the quality of the beam.

The velocity distribution of the scattered electrons will, of course, depend upon the material of the collector and the quantities actually measured will, in addition, depend upon the surrounding walls where rescattering occurs. Thus the quantity measured is the net result of a differential scattering. This is indicated by some of the curves in Figure 12, where I_L is plotted as a function of d. Group A was obtained using gold (atomic number $Z=79$), tin ($Z=50$), and aluminum ($Z=13$) as thin covers over the opening O_2. These covers had

[15] W. D. Coolidge, J. Frank. Inst., 202, p. 693; 1926.

different thickness and were themselves covered on the outer side by 0.027 mm. cellophane so that the absolute values of I_L are not comparable. The collector F was brass (Z about 30) as used heretofore. Electrons scattered from F are in part rescattered from and in part absorbed by the window.

Curve 1 for a gold window gives a very high plate current. Curve 2 for tin is similar in this respect, though relatively smaller than for

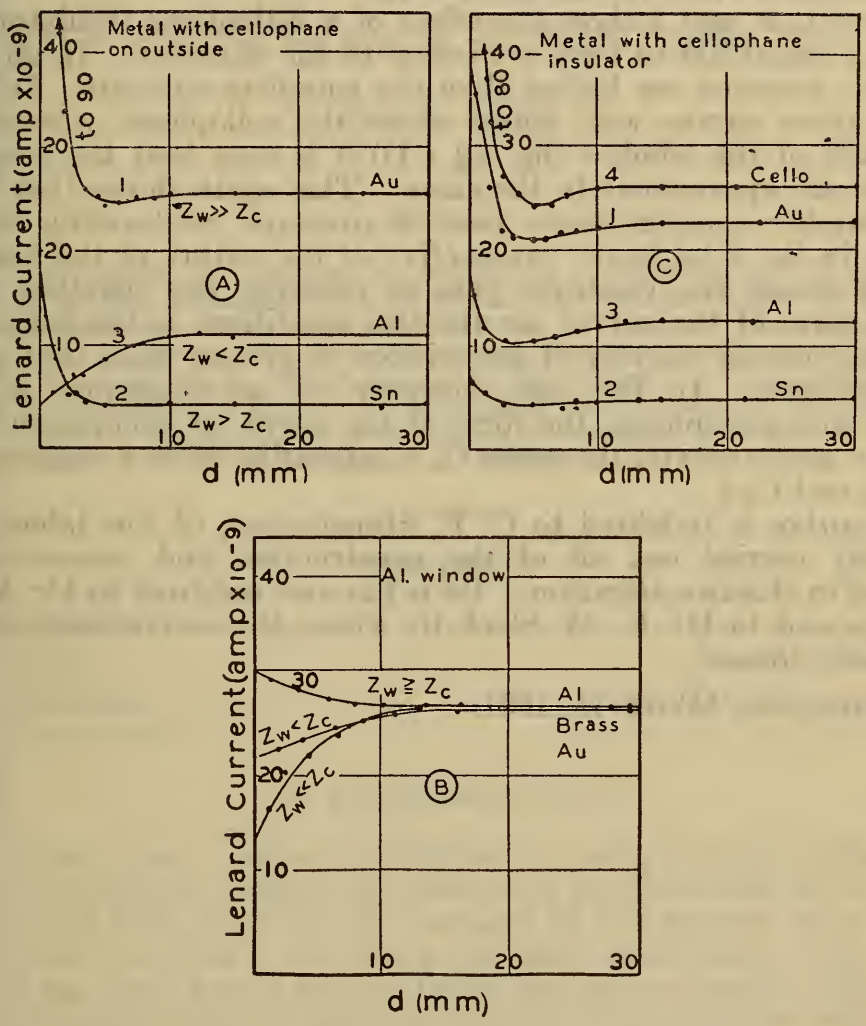

FIGURE 12.—*Curves showing effect on the measured Lenard current of different collector window and plunger materials*

gold. Curve 3 for aluminum shows, on the other hand, a plate current lower than the complete current; and, we find that, in general, when the atomic number, Z_W, of the window is greater than that, Z_C, of the collector the plate current is larger than the complete and vice versa. This indicates that the net scattering reverses with the relative position of the scatterers in the atomic number scale.

To check this as it affects the type of measurements here involved the curves in group B were obtained which seem to support this view. Here the window was of aluminum in all cases while the face of the collector F was covered successively with aluminum, brass, and gold. The relative plate and complete values of I_L occur in an order which is the reverse of that shown by curves A. The slight increase in the case of two aluminum scatterers may be attributed

to a small amount of brass exposed by the beveled edges under the aluminum window.

With a cover of cellophane or mica over O_2, the complete value of the current is less than the plate, and hence does not obey the relationship to atomic numbers found for the metal foils. Curve 4 in group C, showing the variation of I_L with d, for a cellophane window over the Faraday chamber, is seen to give a higher plate than complete value for the current I_L.

Curves 1, 2, and 3 show the effect of a cellophane insulator used behind a metal foil to form a window to the chamber. In all cases the plate currents are higher than the complete currents. In comparing these curves with those where the cellophane was on the outer side of the window (fig. 12 (A)) it is seen that the complete currents are approximately the same. This again shows that Faraday chamber measurements bear a constant relationship to the current in the total beam irrespective of the nature of the material through which the electrons pass in entering the chamber. The general form of the curves for the two conditions is the same only when the atomic number of the window is greater than that of the brass collector. In the case, however, of an aluminum window backed with cellophane, the form of the curve for cellophane alone seems to predominate; the curve C, 3, appearing to be a combination of A, 3, and C, 4.

The author is indebted to C. F. Stoneburner, of this laboratory, who ably carried out all of the construction and measurements involved in this investigation. He is likewise indebted to Dr. W. D. Coolidge and to Dr. C. M. Slack by whom the several cathode-ray tubes were loaned.

WASHINGTON, March 15, 1931.