JOURNAL OF RESEARCH of the National Bureau of Standards—C. Engineering and Instrumentation
Vol. 67C, No. 1, January–March 1963

An Oxygen Partial Pressure Warning Instrument*

Lewis Greenspan

(October 1, 1962)

An instrument has been developed to monitor partial pressure of oxygen in the respiratory air supply to an aviator. The requirements for the application are small size, light weight, capability for measuring oxygen partial pressure with an accuracy of ±5 millimeters Hg and response times less than 15 seconds. The instrument utilizes an oxygen absorber in one arm. Theory of the instrument is discussed and expressions for response and response time are derived. A prototype measuring 9⅝ × 7⅝ × 7⅛ inches and weighing about 13 pounds is described and performance data given. The prototype measures oxygen partial pressure within ±4.5 millimeters Hg from sea level to 45,000 feet with response time from 5 to 124 seconds. It may be used either as a warning device or as an indication. Means for improving response time are discussed.

1. Introduction

In order to maintain the well-being and efficiency of personnel in high-altitude aircraft, it is necessary that they be supplied with air for breathing, having a near-sea-level equivalent oxygen content. Where cabin pressure is not maintained at or near sea level equivalent, mixtures of air and oxygen or pure oxygen are metered by oxygen regulators to the personnel. Though air containing insufficient oxygen may have a very deleterious effect on a person, he is often completely unaware of the deficiency. It is, therefore, necessary to have an instrument to warn flying personnel of the lack of sufficient oxygen in the breathing air supply, which may be detected by a measure of the oxygen partial pressure in either the inhaled or exhaled breath.

Such an instrument must be capable of measuring the partial pressure of oxygen in the range of 65 to 112 mm Hg (depending on whether the oxygen content of the exhaled or inhaled breath is to be measured) to within about 5 mm Hg. It must perform the measurement and indication operation within about 15 sec due to the short time of useful consciousness when breathing ambient air at high altitude.[1] In addition, such an instrument must be small and lightweight for use in aircraft.[2]

An oxygen-partial-pressure indicating and warning instrument, meeting most of these requirements, has been developed and constructed. It is based on the critical-flow pneumatic bridge described by W. A. Wildhack.[3] It is roughly analogous to a Wheatstone bridge where orifice or nozzle elements are the analogs of the resistance elements and a differential pressure gage is the analog of the galvanometer. When the bridge is balanced, that is, when the nozzle or orifice area ratios of the two arms are equal, the pressure difference across the bridge is zero. When a specific absorber is incorporated into one branch of a balanced bridge, between the upstream and downstream elements, pressure unbalance, approximately proportional to the partial pressure of the absorbed gas constituent, occurs and is measured by the differential pressure gage.

---

*This project was supported by the Bureau of Naval Weapons, Department of the Navy.

[1] Journal of Applied Physiology **1,** 490 (1949) Interval of useful consciousness at various altitudes, F. H. Hall.

[2] Whereas no currently available instrument was adequate for this purpose in June 1958, when this development was begun, electrochemical and polarigraphic type oxygen detectors which may meet requirements have since become available.

[3] Review of Scientific Instruments, Vol. **21,** No. 1, 25–30, January 1950; A versatile pneumatic instrument based on critical flow, W. A. Wildhack.

2. Theory

2.1. General Steady State Theory

Whenever critical flow exists in a nozzle or orifice, the upstream volumetric flow is independent of the pressure downstream of the nozzle or orifice. For a nozzle, the flow is given by

$$F_1 = CA\left(\frac{2n}{n+1}\right)^{1/2} r_c^{1/n}\left(\frac{P_1}{\rho_1}\right)^{1/2} \tag{1}$$

where

F_1=entrance volumetric flow
C=discharge coefficient
A=nozzle throat area
n=ratio of specific heats
r_c=ratio of throat to upstream pressure at critical flow=

$$\left(\frac{2}{n+1}\right)^{\frac{n}{n-1}}$$

P_1=entrance pressure
ρ_1=entrance gas density.

Equation (1) holds whenever the ratio of downstream pressure to upstream pressure is equal to or less than r_c. For dry air, under standard conditions, r_c=0.528. It varies only to a minor degree with temperatures and pressures here of interest.

Consider now a pneumatic bridge containing four critical flow elements (i.e., nozzles) and a specific gas absorber, shown schematically in figure 1. Let the critical flow elements have areas of A_{1x}, A_{2x}, A_{1y}, and A_{2y}. F_{1x}, F_{2x}, F_{1y}, and F_{2y} are the corresponding entrance volume flows to each of the elements. P_1 is the entrance pressure to the bridge. P_{2x} is the pressure in the x-branch (the absorber branch) between the upstream and downstream elements and P_{2y} is the pressure in the y-branch between the upstream and downstream elements.

With reference to the upstream nozzle of the y-branch of the bridge, eq (1) becomes

$$F_{1y} = CA_{1y}\left(\frac{2n}{n+1}\right)^{1/2} r_c^{1/n}\left(\frac{P_1}{\rho_{1y}}\right)^{1/2}. \tag{2}$$

Values of $\left(\frac{2n}{n+1}\right)^{1/2} r_c^{1/n}$ are tabulated in table 1 for several gases. In addition, values for each gas relative to nitrogen are also given. It can be seen from table 1 that for oxygen,

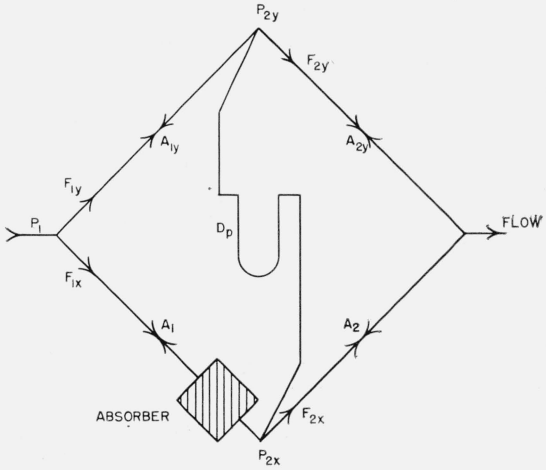

FIGURE 1. *Schematic bridge arrangement.*

nitrogen, and air (as well as other gases), these values are essentially the same. Therefore let Z be a constant defined as follows:

$$Z=C\left(\frac{2n}{n+1}\right)^{1/2} r_c^{1/n}. \tag{3}$$

TABLE 1. *Gas constants at 300 °K for discharge coefficients of unity*

Gas	n C_p/C_v	r_c $\left(\frac{2}{n+1}\right)^{\frac{n}{n-1}}$	Z $\left(\frac{2n}{n+1}\right)^{1/2} r_c^{1/n}$	Z/Z_{N_2}
Nitrogen	1.401	0.5281	0.6849	1.0000
Dry air	1.4017	.5280	.6850	1.0001
Oxygen	1.396	.5289	.6840	0.9987
Carbon dioxide	1.2878	.5480	.6651	.9711
Hydrogen	1.405	.5274	.6856	1.0010
Water vapor	1.333	.5399	.6732	0.9829

The mass flow through the upstream nozzle of the y-branch is given by

$$\rho_{1y}F_{1y}=A_{1y}ZKP_1\sqrt{\frac{M_1}{T_{1y}}} \tag{4}$$

where ρ_{1y} is the density of the entrance gas in the y-branch.

K is a constant defined by the equation $\rho_{1y}=\frac{K^2M_1P_1}{T_1}$

M_1 is the molecular weight of the entrance gas

T_{1y} is the absolute entrance temperature in the y-branch.

The mass flows through the other nozzles similarly are given by

$$\rho_{2y}F_{2y}=A_{2y}ZKP_{2y}\sqrt{\frac{M_{2y}}{T_{2y}}} \tag{5}$$

$$\rho_{1x}F_{1x}=A_{1x}ZKP_1\sqrt{\frac{M_{1x}}{T_{1x}}} \tag{6}$$

$$\rho_{2x}F_{2x}=A_{2x}ZKP_{2x}\sqrt{\frac{M_{2x}}{T_{2x}}}. \tag{7}$$

The mass flow of gas absorbed in the x-branch is given by

$$\rho_A F_{1x}=A_{1x}ZKP_A\frac{M_A}{\sqrt{M_{1x}T_{1x}}} \tag{8}$$

where ρA is the density of oxygen in the entrance gas, P_A is the partial pressure of the absorbed constituent and M_A its molecular weight.

Since there are no sources or sinks in the y-branch

$$\rho_{1y}F_{1y}=\rho_{2y}F_{2y} \tag{9}$$

and

$$M_{2y}=M_1=M_{1x}. \tag{10}$$

Solving for P_{2y} in (4) and (5) yields

$$P_{2y}=\frac{A_{1y}}{A_{2y}}P_1\sqrt{\frac{T_{2y}}{T_{1y}}}. \tag{11}$$

Since there is a sink in the x-branch

$$\rho_{2x}F_{2x}=\rho_{1x}F_{1x}-\rho_A F_{1x}. \tag{12}$$

Solving for P_{2x} in (6), (7), and (8) gives

$$P_{2x}=\frac{A_{1x}}{A_{2x}}P_1\sqrt{\frac{M_1T_{2x}}{M_{2x}T_{1x}}}-\frac{A_{1x}}{A_{2x}}P_A\frac{M_A}{\sqrt{M_1M_{2x}}}\sqrt{\frac{T_{2x}}{T_{1x}}}. \tag{13}$$

The differential pressure across the bridge, D_p, is P_{2y} less P_{2x} or

$$D_p=P_1\left(\frac{A_{1y}}{A_{2y}}\sqrt{\frac{T_{2y}}{T_{1y}}}-\frac{A_{1x}}{A_{2x}}\sqrt{\frac{M_1T_{2x}}{M_{2x}T_{1x}}}\right)+P_A\frac{A_{1x}}{A_{2x}}\frac{M_A}{\sqrt{M_1M_{2x}}}\sqrt{\frac{T_{2x}}{T_{1x}}}. \tag{14}$$

Assume that the bridge is balanced, that is, $\frac{A_{1y}}{A_{2y}}=\frac{A_{1x}}{A_{2x}}=\frac{A_1}{A_2}$, and that the temperatures are all equal, that is, $T_{1x}=T_{1y}=T_{2x}=T_{2y}=T$. Equation (14) then becomes

$$D_p=P_1\frac{A_1}{A_2}\left(1-\sqrt{\frac{M_1}{M_{2x}}}\right)+P_A\frac{A_1}{A_2}\frac{M_A}{\sqrt{M_1M_{2x}}}. \tag{15}$$

If the molecular weight of the gas is not significantly changed by the removal of the absorbed constituent, that is, where $M_1=M_{2x}$, eq (15) becomes

$$D_p=\frac{A_1}{A_2}P_A\frac{M_A}{M_1}. \tag{16}$$

Thus it follows that the pressure difference across the bridge is a direct linear function of the partial pressure of the absorbed constituent. For air at atmospheric conditions, this linear approximation, would lead to a 5 percent error.

2.2. Speed of Response

Adequate speed of response is an essential requirement in the application being considered. To estimate the response of the instrument to a step change in the input conditions, where the inlet pressure goes from P_0 to P_1 and the inlet partial pressure of the absorbed constituent goes from P_{A_0} to P_A, assume that the entire bridge is maintained at constant temperature so that $T_{1y}=T_{2y}=T_{1x}=T_{2x}=T$. The mass of gas between the two nozzles in the nonabsorber branch of the bridge (the y branch) is $\rho_{2y}V_y$, where V_y is the total gaseous volume of the y branch between the inlet and outlet nozzles. The rate of change of mass is given by

$$V_y\frac{d\rho_{2y}}{dt}=\rho_{1y}F_{1y}-\rho_{2y}F_{2y}. \tag{17}$$

Substituting (4) and (5) into (17), and, integrating and evaluating constants, we obtain

$$P_{2y}=\frac{A_{1y}}{A_{2y}}\left[P_0e^{-\frac{A_{2y}Z\sqrt{Tt}}{V_yK\sqrt{M_{2y}}}}+\sqrt{\frac{M_1}{M_{2y}}}P_1\left(1-e^{-\frac{A_{2y}Z\sqrt{Tt}}{V_yK\sqrt{M_{2y}}}}\right)\right]. \tag{18}$$

Now in the y-branch, the major volume, the ballast volume, is in a side branch not directly in the flow path from the upstream to downstream nozzle. This actual flow path is very

small (of the order of $2cm^3$ in volume). Therefore, except for slight diffusion from the ballast volume, the gas composition flowing from the outlet nozzle is the same as the gas composition flowing into the inlet nozzle and it is assumed that $M_{2y}=M_1$. Equation (18) therefore becomes

$$P_{2y}=\frac{A_{1y}}{A_{2y}}\left[P_0 e^{-\frac{t}{C_1}}+P_1\left(1-e^{-\frac{t}{C_1}}\right)\right] \tag{19}$$

where

$$\frac{1}{C_1}=\frac{A_{2y}Z\sqrt{T}}{V_y K\sqrt{M_1}}.$$

In the x-branch (absorber branch) the flow is through a packed absorber which has the effect of providing essentially a nonturbulent and nonmixing flow. When the composition of the inlet gas changes, a boundary is formed in the absorber container between downstream gas of the old composition and upstream gas of the new composition. This boundary travels down the absorber tube until it reaches active absorber, at which point the oxygen begins to be removed. The time ω required for the boundary to travel from the absorber container inlet to the active absorber is defined by the following expression.

$$\int_0^{\omega}\frac{P_{2x}}{P_1}\,dt=\frac{\omega F_{1x}}{V_A U} \tag{20}$$

where V_A is the volume of the voids in the absorber container and U is the ratio of consumed absorber to total absorber. Equation (20) may be also expressed as

$$\omega=\frac{V_A U}{F_{1x}}\overline{\frac{P_{2x}}{P_1}} \tag{21}$$

where $\overline{\frac{P_{2x}}{P_1}}$ is the average value of $\frac{P_{2x}}{P_1}$ per unit time during ω. Assuming no pressure drop through the absorber, the rate of change of mass in the x-branch is given by

$$V_x\frac{d\rho_{2x}}{dt}=\rho_1 F_{1x}-\rho_{A_2}F_{1x}\frac{P_1}{P_{2x}}-\rho_{2x}F_{2x} \tag{22}$$

where ρA_2 is the density of oxygen in the x-branch just upstream of the active absorber. For $0\leqq t\leqq\omega$, we have

$$\rho_{A_2}=\frac{P_{A_0}}{P_0}P_{2x}\frac{M_A}{T}K^2 \tag{23}$$

and for $\omega\leqq t\leqq\infty$, we have

$$\rho_{A_2}=\frac{P_A}{P_1}P_{2x}\frac{M_A}{T}K^2. \tag{24}$$

For $t\leqq\omega$, eq (22) becomes,

$$V_x=\frac{d\rho_{2x}}{dt}=A_{1x}ZK\sqrt{\frac{M_1}{T}}P_1-A_{1x}ZK\frac{M_A}{\sqrt{M_1T}}\frac{P_{A_0}}{P_0}P_1-A_{2x}ZK\sqrt{\frac{M_{2z}}{T}}P_{2x}. \tag{25}$$

$$\frac{dP_{2x}}{dt}=\frac{A_{1x}Z\sqrt{T}\sqrt{M_1}P_1-A_{1x}Z\sqrt{T}\frac{M_A}{\sqrt{M_1}}\frac{P_{A_0}}{P_0}P_1-A_{2x}Z\sqrt{T}\sqrt{M_{2x}}P_{2x}}{V_x K M_{2x}} \tag{26}$$

Integrating and evaluating constants, we obtain,

$$P_{2x}=\frac{A_{1x}}{A_{2x}}\left[\left(P_0\sqrt{\frac{M_0}{M_{2x}}}-P_{A_0}\frac{M_A}{\sqrt{M_0M_{2x}}}\right)e^{-\frac{t}{C_2}}+\left(P_1\sqrt{\frac{M_1}{M_{2x}}}-\frac{P_{A_0}}{P_0}P_1\frac{M_A}{\sqrt{M_1M_{2x}}}\right)\left(1-e^{-\frac{t}{C_2}}\right)\right] \tag{27}$$

where

$$\frac{1}{C_2}=\frac{A_{2x}Z\sqrt{T}}{V_xK\sqrt{M_{2x}}}.$$

Equation (27) depicts the pressure in the absorber branch of the bridge subsequent to discrete changes in inlet gas conditions up to the time ω. For $t>\omega$, eq (22) becomes

$$V_x\frac{d\rho_{2x}}{dt}=A_{1x}ZK\sqrt{\frac{M_1}{T}}P_1-A_{1x}ZK\frac{M_A}{\sqrt{M_1T}}P_1-A_{2x}ZK\sqrt{\frac{M_{2x}}{T}}P_{2x}. \tag{28}$$

$$\frac{dP_{2x}}{dt}=\frac{A_{1x}Z\sqrt{T}\sqrt{M_1}P_1-A_{1x}Z\sqrt{T}\frac{M_A}{\sqrt{M_1}}P_A-A_{2x}Z\sqrt{T}\sqrt{M_{2x}}P_{2x}}{V_xKM_{2x}} \tag{29}$$

Integrating and evaluating constants, we obtain,

$$\begin{aligned}P_{2x}=&\frac{A_{1x}}{A_{2x}}\left(P_0\sqrt{\frac{M_0}{M_{2x}}}-P_{A_0}\frac{M_A}{\sqrt{M_0M_{2x}}}\right)e^{-\frac{t}{C_2}}\\&+\frac{A_{1x}}{A_{2x}}\left(P_1\sqrt{\frac{M_1}{M_{2x}}}-\frac{P_{A_0}}{P_0}P_1\frac{M_A}{\sqrt{M_1M_{2x}}}\right)\left(1-e^{-\frac{t}{C_2}}\right)\\&+\frac{A_{1x}}{A_{2x}}\left(\frac{P_{A_0}}{P_0}P_1-P_A\right)\frac{M_A}{\sqrt{M_1M_{2x}}}\left(1-e^{-\frac{(t-\omega)}{C_2}}\right).\end{aligned} \tag{30}$$

Equation (30) depicts the pressure in the absorber branch of the bridge for periods greater than ω following a discrete change in inlet gas conditions. For a balanced bridge $\left(\frac{A_{1x}}{A_{2x}}=\frac{A_{1y}}{A_{2y}}=\frac{A_1}{A_2}\right)$, the differential pressure across the bridge, D_p, is given by

$$\begin{aligned}D_p=\frac{A_1}{A_2}\Bigg[&P_0e^{-\frac{t}{C_1}}-\left(P_0\sqrt{\frac{M_0}{M_{2x}}}-P_{A_0}\frac{M_A}{\sqrt{M_0M_{2x}}}\right)e^{-\frac{t}{C_2}}\\&+P_1\left(1-e^{-\frac{t}{C_1}}\right)-P_1\left(\sqrt{\frac{M_1}{M_{2x}}}-\frac{P_{A_0}}{P_0}\frac{M_A}{\sqrt{M_1M_{2x}}}\right)\left(1-e^{-\frac{t}{C_2}}\right)\Bigg],\end{aligned} \tag{31}$$

for $t<\omega$, and by

$$\begin{aligned}D_p=\frac{A_1}{A_2}\Bigg[&P_0e^{-\frac{t}{C_1}}-\left(P_0\sqrt{\frac{M_0}{M_{2x}}}-P_{A_0}\frac{M_A}{\sqrt{M_0M_{2x}}}\right)e^{-\frac{t}{C_2}}+P_1\left(1-e^{-\frac{t}{C_1}}\right)\\&-P_1\left(\sqrt{\frac{M_1}{M_{2x}}}-\frac{P_{A_0}}{P_0}\frac{M_A}{\sqrt{M_1M_{2x}}}\right)\left(1-e^{-\frac{t}{C_2}}\right)-\left(\frac{P_{A_0}}{P_0}P_1-P_A\right)\frac{M_A}{\sqrt{M_1M_{2x}}}\left(1-e^{-\frac{(t-\omega)}{C_2}}\right)\Bigg]\end{aligned} \tag{32}$$

for $t>\omega$.

It is apparent from (31) and (32) that if $\frac{A_{2y}}{V_yM_1}=\frac{A_{2x}}{V_xM_{2x}}=\frac{A_2}{VM}$, the response of the instrument is exponential. Though the volume V_y cannot be made exactly equal to $V_x\frac{M_{2x}}{M_1}\frac{A_{2y}}{A_{2x}}$, because M_1 is not a constant, it is made approximately so and the expression for the bridge response to a discrete change in inlet gas conditions for $t<\omega$ is approximately given by

$$\begin{aligned}D_p=\frac{A_1}{A_2}\Bigg[&P_0\left(1-\sqrt{\frac{M_0}{M_{2x}}}\right)+P_{A_0}\frac{M_A}{\sqrt{M_0M_{2x}}}\Bigg]e^{-\frac{t}{C}}+\frac{A_1}{A_2}\Bigg[P_1\left(1-\sqrt{\frac{M_1}{M_{2x}}}\right)\\&+P_A\frac{M_A}{\sqrt{M_1M_{2x}}}\Bigg]\left(1-e^{-\frac{t}{C}}\right)+\frac{A_1}{A_2}\frac{M_A}{\sqrt{M_1M_{2x}}}\left(\frac{P_{A_0}}{P_0}P_1-P_A\right)\left(1-e^{-\frac{t}{C}}\right);\end{aligned} \tag{33}$$

where $\frac{1}{C}=\frac{A_2 Z\sqrt{T}}{VK\sqrt{M}}$ and for $t \geqq \omega$,

$$D_p=\frac{A_1}{A_2}e^{-\frac{\omega}{C}}\left[P_0\left(1-\sqrt{\frac{M_0}{M_{2x}}}\right)+P_{A_0}\frac{M_A}{\sqrt{M_0M_{2x}}}\right]e^{-\frac{(t-\omega)}{C}}$$
$$-\frac{A_1}{A_2}e^{-\frac{\omega}{C}}\left[P_1\left(1-\sqrt{\frac{M_1}{M_{2x}}}\right)+P_A\frac{M_A}{\sqrt{M_1M_{2x}}}\right]e^{-\frac{(t-\omega)}{C}}+\frac{A_1}{A_2}\left[P_1\left(1-\sqrt{\frac{M_1}{M_{2x}}}\right)\right.$$
$$\left.+P_A\frac{M_A}{\sqrt{M_1M_{2x}}}\right]-\frac{A_1}{A_2}\left(1-e^{-\frac{\omega}{C}}\right)\left(P_A-\frac{P_{A_0}}{P_0}P_1\right)\frac{M_A}{\sqrt{M_1M_{2x}}}e^{-\frac{(t-\omega)}{C}}. \quad (34)$$

Substituting

$$\frac{A_1}{A_2}\left[P_0\left(1-\sqrt{\frac{M_0}{M_{2x}}}\right)+P_{A_0}\frac{M_A}{\sqrt{M_1M_{2x}}}\right]=D_{p_0} \quad (35)$$

and

$$\frac{A_1}{A_2}\left[P_1\left(1-\sqrt{\frac{M_1}{M_{2x}}}\right)+P_A\frac{M_A}{\sqrt{M_1M_{2x}}}\right]=D_{p_1} \quad (36)$$

into eqs (33) and (34), where D_{p_0} and D_{p_1} are the steady-state bridge indications corresponding to the initial and final inlet conditions, respectively, we have

$$D_p=D_{p_1}+\frac{A_1}{A_2}\frac{M_A}{\sqrt{M_1M_{2x}}}\left(\frac{P_{A_0}}{P_0}P_1-P_A\right)+\left[D_{p_0}-D_{p_1}-\frac{A_1}{A_2}\frac{M_A}{\sqrt{M_1M_{2x}}}\left(\frac{P_{A_0}}{P_0}P_1-P_A\right)\right]e^{-\frac{t}{C}} \quad (37)$$

where $t \leqq \omega$. For $t \geqq \omega$, we have

$$D_p=D_{p_1}+\left[D_{p_0}-D_{p_1}+\left(e^{-\frac{\omega}{C}}-1\right)\frac{A_1}{A_2}\frac{M_A}{\sqrt{M_1M_{2x}}}\left(\frac{P_{A_0}}{P_0}P_1-P_A\right)\right]e^{-\frac{t}{C}}. \quad (38)$$

Substituting the indication at which a warning is achieved, D_{pw} for D_p, in (37) and (38), we may solve for the time necessary to achieve a warning, t_w.

$0 \leqq t_w \leqq \omega$

$$t_w=-C\ln\frac{D_{p_w}-D_{p1}-\frac{A_1}{A_2}\frac{M_A}{\sqrt{M_1M_{2x}}}\left(\frac{P_{A_0}}{P_0}P_1-P_A\right)}{D_{p_0}-D_{p_1}-\frac{A_1}{A_2}\frac{M_A}{\sqrt{M_1M_{2x}}}\left(\frac{P_{A_0}}{P_0}P_1-P_A\right)} \quad (39)$$

$\omega \leqq t_w \leqq \infty$

$$t_w=-C\ln\frac{D_{p_w}-D_{p_1}}{D_{p_0}-D_{p_1}+\left(e^{-\frac{\omega}{C}}-1\right)\frac{A_1}{A_2}\frac{M_A}{\sqrt{M_1M_{2x}}}\left(\frac{P_{A_0}}{P_0}P_1-P_A\right)}. \quad (40)$$

A special case of (39) and (40) is obtained when either $\frac{P_{A_0}}{P_0}=\frac{P_A}{P_1}$ (the percentage of oxygen remains constant) or when $\omega=0$. In these cases we have

$0 \leqq t_w \leqq \infty$

$$t_w=-C\ln\frac{D_{p_w}-D_{p_1}}{D_{p_0}-D_{p_1}}. \quad (41)$$

The time constant C of the instrument constructed was approximately 119 sec. Based on an assumption that one half of the volume of the absorber container remained void after filling with absorber, it is estimated that ω could vary from 0 to 47 sec under steady inlet

pressure conditions. Under these circumstances the time to warn was excessively large. A number of improvements could be made to reduce the time necessary to achieve a warning.

One method of reducing t_w is to reduce the time constant C. Better packing of the absorber in the absorber container would reduce V, but not to any appreciable extent since the volume of the pressure switch is also involved in V. Increasing A_2 or reducing the volume of absorber container would reduce the allowable operating time between refills of fresh absorber. Some improvement in C may be achieved by better packing of absorber or by obtaining a pressure switch with a smaller internal volume, but to a great extent it is determined by the operating time desired between absorber refills.

Another method of reducing t_w is to reduce ω. This is likewise influenced by the desired operating time between absorber refills but more complete filling of the absorber container has a greater influence on ω than on the time constant C, because the internal volume of the pressure switch is not involved in the determination of ω.

Another method of improving ω is to reverse the flow through the absorber container after one half of the normal operating time between absorber refills had expired. This would have the effect of halving the maximum value of ω. Another method would be to have the inlet tube in the absorber container advance through the absorber during operation at a rate greater than the rate of absorber consumption. This would have the effect of essentially restricting ω to the value of 0.

Another method of reducing t_w would be to restrict the maximum value of D_{p_0} to a value only slightly greater than D_{p_w}. Various methods of restricting D_{p_0} may be used. One method was used in this instrument and demonstrated its feasibility though it did not reduce t_w to acceptable limits in all cases.

The method of controlling D_{p_0} in this instrument was to close off the inlet to the bridge by means of a solenoid valve whenever D_p exceeded some value D_{p_A} and to reopen the solenoid valve whenever D_p was less than some preset value D_{p_B}. Both D_{p_A} and D_{p_B} were greater than D_{p_w}. A second microswitch located within the pressure switch and set just above the warning indication microswitch, was used to actuate the solenoid valve. Closing or opening the solenoid valve, while inlet conditions are steady, does not change the molecular weight of the inlet gas or the percent of oxygen in the inlet gas. Therefore, D_{p_A} is given by

$$D_{p_A}=\frac{D_{p_A}}{D_{p_0}}\frac{A_1}{A_2}P_0\left(1-\sqrt{\frac{M_0}{M_{2x}}}+\frac{P_{A_0}}{P_0}\frac{M_A}{\sqrt{M_0M_{2x}}}\right). \tag{42}$$

Since the only initial conditions appearing in (39), (40), or (41) are D_{p_0} and $\frac{P_{A_0}}{P_0}$, D_{p_A} or D_{p_B} may be substituted directly for D_{p_0} since $\frac{P_{A0}}{P_0}$ is not changed.

An estimate of the effect on the time to warn created by this method may be made for specific conditions. Assume that $D_{p_A}=D_{p_B}$, and that $D_{p_w}=43.8$ mm Hg which corresponds to an oxygen partial pressure of 110 mm Hg at 35,000 ft. If we switch from O_2 to air at 35,000 ft we have the following time to warn

	Time to warn in sec with $\omega=0$	Time to warn in sec with $\omega=59.5$
No solenoid modification	78. 2	102
$D_{p_A}=53.8$	35. 9	68. 6
$D_{p_A}=45.0$	4. 7	13. 9

Since D_{p_A} is not equal to D_{p_B}, there is a period of time during which the solenoid valve is closed, during which time, the instrument is incapable of sensing changes in inlet conditions.

Therefore to the above estimated times would have to be added some fraction of the time that the solenoid valve remained closed. For this system to operate optimally, it is necessary for D_{p_A} and D_{p_B} to be very near each other and only slightly larger than D_{p_w}. The limits to which this system may be pushed depend primarily on the sensitivity of the pressure switch available.

3. Description of Instrument

Figure 2 shows a schematic diagram of the pneumatic system of the instrument constructed to give a warning whenever the inlet partial pressure of oxygen decreases below a predetermined value.

Test gas, the oxygen partial pressure of which is to be determined, enters the inlet (1). About half of the flow goes through the bypass orifice (2) directly to the main valve (3) and on to the vacuum pump (4). The rest of the test gas goes through the solenoid valve, (5), through a filter (6) and into the inlet of the orifice block (7). In the orifice block, the gas again splits into two roughly equal streams, one of which traverses the y-branch while the other traverses the x-branch of the bridge.

The y-branch flow passes through the y-branch inlet orifice (8) and out of the orifice block. From there it goes to a ballast volume (9), and then to one side of a differential pressure switch (10), to a self-sealing pressure tap (11) and back into the orifice block. It then passes through the y-branch outlet orifice (12) and, joining the flow from the x-branch, flows from the outlet of the orifice block, is met and augmented by the bypass flow and discharges through the main valve (3) into the vacuum pump. The x-branch flow goes through the x-branch inlet orifice (13), out of the orifice block, through the absorber container (14) to the other side of the differential pressure switch (10) and to a self-sealing pressure tap (15) and back into the orifice block where it traverses the x-branch outlet orifice (16) and then merges with the y-branch flow and proceeds as previously described.

The vacuum pump induces a flow through the orifice block containing the four orifices which make up the pneumatic bridge. The filter is used upstream of the orifice block to maintain orifice cleanliness. The differential pressure switch across the bridge senses the bridge indication and initiates the warning. The ballast volume compensates for the absorber bolume so that $\frac{V_y}{A_{2y}}=\frac{V_x}{A_{2x}}$. The self-sealing pressure taps allow introduction of a differential pressure gage for reading directly the differential bridge pressure.

In order to minimize the warning time, the maximum instrument indication is kept near the indication necessary to cause a warning. This is accomplished by stopping the flow to the inlet of the bridge by means of the solenoid valve whenever the differential pressure across the bridge exceeds the warning pressure by some fixed amount. The continuing flow from the bridge causes a reduction in the inlet pressure as well as the inlet oxygen partial pressure, thereby decreasing the differential pressure across the bridge until the solenoid valve reopens. The action of the solenoid valve is controlled by the differential pressure switch through a microswitch that is set to operate at a pressure just slightly above the warning pressure. The bypass orifice maintains a continuous flow of test gas, regardless of on-off position of the solenoid valve, directly to the vacuum pump.

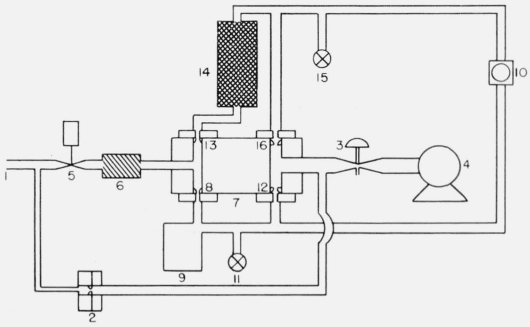

FIGURE 2. *Schematic diagram of model 2.*

1=inlet; 2=by-pass orifice; 3=main valve; 4=vacuum pump; 5=solenoid valve; 6=filter; 7=orifice block; 8=y-branch inlet orifice; 9=ballast volume; 10=pressure switch; 11=self-sealing pressure tap; 12=y-branch outlet orifice; 13=x-branch inlet orifice; 14=absorber container; 15=self-sealing pressure tap; 16=x-branch outlet orifice.

Figure 3 is a front view of the actual instrument, without the absorber container connected and figure 4 is a view of an assembled and disassembled absorber container.

The instrument as constructed weighs 11⅜ lb, exclusive of the absorber or ballast volumes. The filled absorber container weighs between 1½ and 1⅝ lb of which 1.15 lb is the weight of the empty container. Over 5 lb of the weight of the instrument is contributed by the vacuum pump and motor. The major dimensions of the instrument are 9⅝ in. long, 7⅛ in. deep and 7⅝ in. high.

Orifices are used in lieu of the nozzles since orifice flow measurements indicated that these orifices had nozzlelike critical flow characteristics. The outlet orifices were made by drilling a hole in 0.008 in. thick phosphor bronze blanks with a 0.006 in. drill. The inlet orifices were fabricated in like manner with a 0.004 in. drill and the diameter of the y-branch inlet orifice was enlarged by etching in nitric acid until the desired $\frac{A_{1y}}{A_{2y}}$ ratio was obtained. With these orifices, the y-branch flow was approximately 74 cm^3/min and the x-branch was approximately 62 cm^3/min. The orifice area ratios for both branches $\frac{A_1}{A_2}$ are approximately 0.377.

The orifice block is made of aluminum and measures roughly 2½ in. by ⅞ in. by ¾ in. The block is of one piece construction with two orifice recesses on each of the two largest faces. At the ends (inlet and outlet) are machined fittings to take rigid tubing. There is an aluminum fitting for each of the recesses which is attached to the face with three allen-head screws. O-rings provide a leak-tight seal between fitting and orifice disk and between the latter and the block. The heat capacity and high conductivity of the block tends to maintain the orifices at a uniform temperature.

The absorber container is made of three interchangeable elements, an aluminum tube and two aluminum end caps. At each end, the inner wall is slightly tapered. Each cap is constructed to slip into an end of the tube and is held in place by three set screws which extend

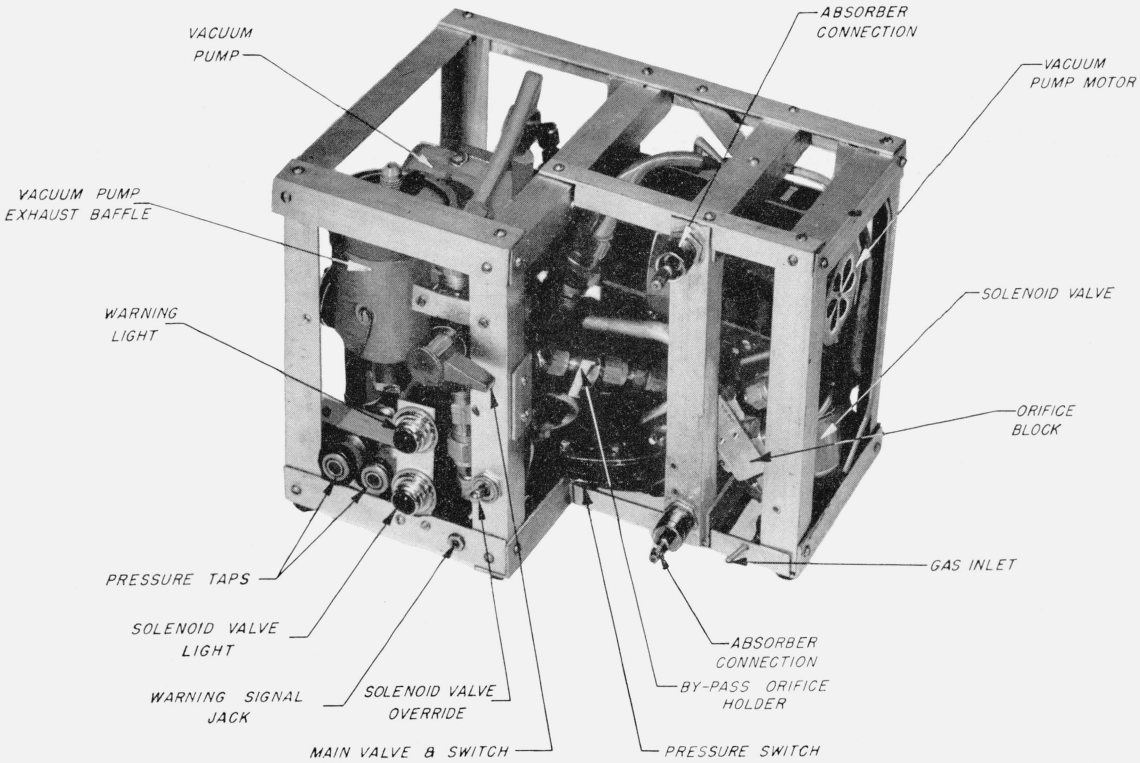

FIGURE 3. *Front view.*

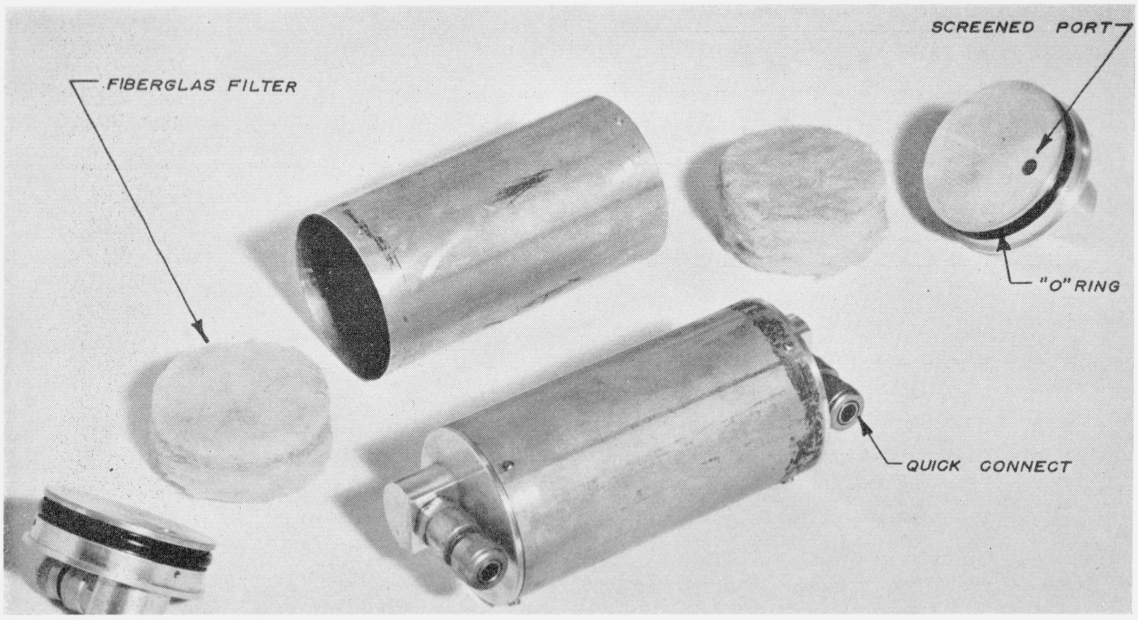

FIGURE 4. *Absorber container assembled and unassembled.*

through threaded holes in the wall of the container. Each cap has three set screw holes, an O-ring groove and a quick-connect self-sealing female fitting at the top which communicates with the necessary holes in the underside of the cap. The hole in the underside of the cap has a fine screen filter.

When the absorber container is filled with absorber, fiberglass plugs, the same diameter as the i.d. of the tube are placed under each cap to retain the absorber. O-rings seal the cap to the tube and set screws help in the alining of the caps so that the absorber container quick-connects mate with the male quick-connects on the instrument proper.

An oil-wetted vane-type vacuum pump is used as the final downstream element of the instrument. By means of this pump, the critical flow conditions necessary to the operation of the instrument are maintained. The pump exhaust is fitted with a special baffle which permits operation in any position without loss of oil. Included with the pump, in one integral unit, is a 27 v d-c motor, rated at 7 amp.

The differential pressure switch, used to actuate both the warning signal and the solenoid valve, is a slack diaphragm type with two separately adjustable microswitches.

The valve used to decrease the response time is a 24 v d-c direct-acting solenoid valve with a $\frac{1}{16}$ in. orifice.

Downstream of the solenoid valve is a sintered bronze filter in the shape of a flower pot which is sealed to the inside of a lucite tube by means of O-rings.

The bypass orifice used to insure a continuous flow from the gas source irrespective of whether the solenoid valve is open or closed, has an area approximately equal to the sum of the inlet orifice areas. It was made and is retained in a metal block in the same manner as the bridge orifices. It is connected between the inlet to the solenoid valve and the inlet to the main valve.

In its present form, the instrument contains no permanent ballast volume to compensate for the volume of the absorber container. A connection is provided for attachment of an external volume. A glass bottle containing glass beads was used to adjust the volume to its proper value. If containers of absorber become standardized, a permanent fixed ballast volume can be added to the instrument. Otherwise, a permanent adjustable volume can be added.

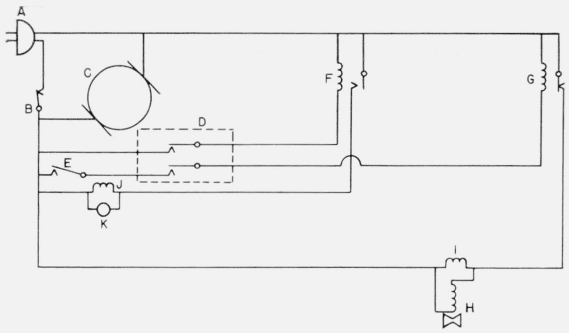

FIGURE 5. *Electrical schematic diagram.*
A=power input; B=main switch; C=vacuum pump motor; D=pressure switch; E=solenoid override switch; F=normally open relay; G=normally closed relay; H=solenoid valve; I=solenoid signal light; J=warning light; K=warning signal jack.

Figure 5 is a schematic diagram of the electrical circuitry of the instrument. Electric energy in the form of 28 v d-c enters the instrument through a nonpolar recessed male receptacle, A. Main power then goes to the main microswitch, B, and then to the vacuum-pump motor, C, and the other controls.

One of the two microswitches in the differential pressure switch, D, actuates a relay, F, which energizes a warning light, J, and miniature phone jack, K, both on the face of the instrument. The other microswitch actuates another relay, G, which energizes a second signal light, I, on the face of the instrument and the solenoid valve, H. This relay, G, is operated in a normally closed position. A signal from the pressure switch, through the relay, closes the solenoid valve. In the absence of a signal from the pressure switch the solenoid valve remains open as long as the power is on. A solenoid valve override switch, E, is provided on the instrument face, which interrupts the signal from the pressure switch to the solenoid relay thereby holding the solenoid valve open.

The chemical selected as the oxygen absorber is cobaltous oxide (CoO), which combines with oxygen to form cobaltic oxide (Co_2O_3). It is not readily available commercially but can be produced by heating cobaltous carbonate at 640 °F in vacuum for several hours. The chemical reactions involved are

$$CoCO_3 \rightarrow CoO + CO_2$$
$$4CoO + O_2 \rightarrow 2Co_2O_3$$

Theoretically, 1.6 pounds of cobaltous carbonate should produce 1 lb of cobaltous oxide, which in turn should combine with 0.1 lb of oxygen, or about 32 liters of oxygen at standard conditions. Based on the flow rate in the x-branch of this instrument, one pound of chemical absorber would be adequate for 8½ hr of operation with 100 percent oxygen at standard conditions. Perfect and complete conversion of cobaltous carbonate into cobaltous oxide is not achieved. Neither can a container of absorber be used until all of the cobaltous oxide is converted into cobaltic oxide. But on the other hand, neither is operation with 100 percent oxygen at standard conditions likely. Based on observed consumption, it was estimated that 1 lb of absorber chemical should be adequate for 8 to 10 hr of operation.

There was a tendency for the cobaltous oxide powder to pack, thereby presenting too great a resistance to the flow of gas. This was overcome as follows: Cobaltous carbonate, 0.15 lb, was thoroughly mixed with 10 cm^3 of water and then pressed into disks 2⅜ in. in diameter and ⅝ in. thick in a piston cylinder arrangement with a force of 50 tons. The disks were then converted to cobaltous oxide under vacuum in a glass chamber at 640 °F. The vacuum and temperature conditions were maintained until the liberation of carbon dioxide and water vapor became negligible (indicated by a reduction in pressure to ½ mm Hg or less). After cooling, the disks were transferred from the conversion chamber to the instrument absorber container in a nitrogen-filled glove box.

The conversion is accompanied by a color change from orange to green, the disks shrink slightly in size, and escaping carbon dioxide makes them porous. This porosity makes it possible for the subsequent gas flow to come into contact with virtually all of the chemical. The disk allows more chemical absorber to be packed into less volume than is possible with powder. Even when the disks break up, they fracture into large pieces which do not pack.

Reactivation of cobaltic oxide into cobaltous oxide is accomplished by continuously flushing the expended disks with hydrogen in a sealed chamber maintained at a temperature 550 °F or higher. The effluent is passed through a cold trap which condenses out the water vapor. The process is continued until the rate of water condensation has become negligible.

Absorber charges of approximately ½ lb were generally used. It is estimated that the absorber container will hold about three quarters of a pound of absorber when packed to the optimum.

4. Performance

4.1. Method of Determining Performance Characteristics

In order to determine performance characteristics, the instrument was operated with input gases which were controlled in composition and pressure. Input pressures were measured by means of an absolute pressure gage, connected at the input to the instrument, and control was obtained by manipulation of valves. Composition was also controlled by valve manipulation on flow lines coming from different cylinders of known gases. The mixed gases were sampled by a Model E–2 Beckman Oxygen Analyzer before entering the instrument. The oxygen analyzer was maintained at the same pressure as the input to the instrument and therefore gave a measure of the partial pressure of oxygen entering the instrument. Tanks of oxygen air, nitrogen, and carbon dioxide were used, as well as a water saturator.

In order to measure response time, solenoid valves were placed in the gas supply lines with appropriate switches so that discrete changes of composition could be made. The 28 v d-c warning signal was used to operate a relay which stopped an electric clock. The reading of the electric clock gave the time to warn directly. Instrument response was read with a mercurial manometer with a zero to 800 mm Hg range and a resolution of 0.1 mm Hg.

Figure 6 is a composite graph of data taken on three different days. Table 2 is a comparison of this data with theoretically expected performance given by (15).

This data indicates that the instrument response is less than theoretically expected. This is probably due to the incomplete absorption of the oxygen by the absorber and to the pressure drop upstream of the inlet orifices such that the inlet partial pressure of oxygen to

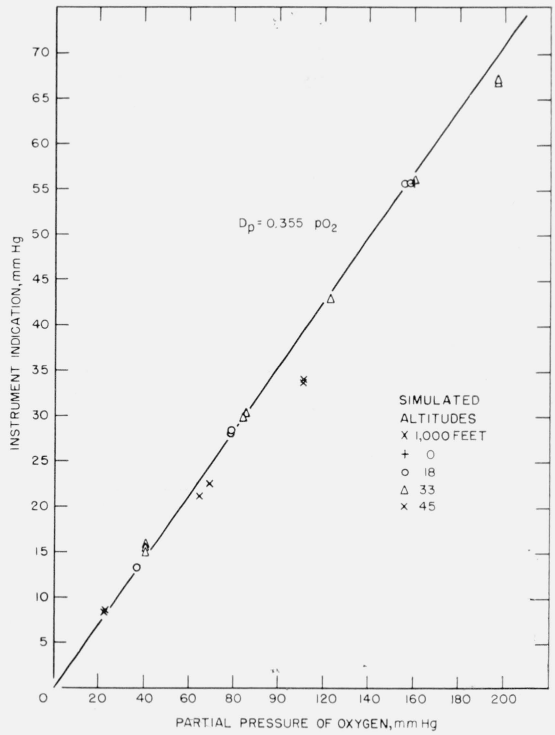

FIGURE 6. *Test data.*
Instrument response versus partial pressure of oxygen.

these orifices is actually less than that in the sample. The instrument response is nominally linear except in cases where the mass ratio of oxygen to test gas approaches unity; here the vacuum pump fails to maintain critical flow across the outlet orifice in the x-branch which produces a further reduction in instrument response.

TABLE 2. *Comparison of measured values with theoretically expected values*

Altitude	Partial pressure of oxygen	Percentage of oxygen by volume	Measured bridge output			Theoretical expected bridge output	Ratio of output indication to partial pressure of oxygen
			6/13/60	7/1/60	8/8/60		
1000 ft	*mm* Hg	*Percent*	*mm* Hg	*mm* Hg	*mm* Hg		
0	159.5	20.9	55.8			62.7	0.350
18	37.0	9.8	13.3			14.9	.359
18	78.8	20.9	28.1			31.0	.357
18	78.8	20.9		28.5		31.0	.362
18	155.9	41.4	55.7			61.1	.357
18	159.0	42.2		55.8		62.3	.351
33	41.2	20.9	15.2			16.2	.369
33	41.2	20.9			15.3	16.2	.371
33	41.3	20.9		15.0		16.2	.363
33	84.1	42.8	29.8			32.9	.354
33	85.5	43.4		30.3		33.5	.354
33	122.7	62.3			42.9	47.4	.350
33	160.0	81.4	56.2			61.0	.351
33	196.8	100.0			67.0	74.1	.340
33	197.2	100.0		67.0		74.3	.340
33	197.2	100.0	67.1			74.3	.340
45	23.2	20.9			8.8	9.1	.379
45	23.2	20.9		8.6		9.1	.371
45	64.3	58.1			21.3	24.9	.331
45	69.0	62.3		22.5		26.7	.326
45	110.7	100.0		33.8		41.7	.305
45	110.9	100.0			34.1	41.8	.307

4.2. Linearity and Altitude Dependence

The indicated differential pressure is dependent primarily on the oxygen partial pressure and secondarily on the ratio of oxygen partial pressure to total gas pressure. If this latter ratio is constant, the indication is linear and independent of altitude. In actual use, this ratio is not constant; therefore, where the altitude (inlet pressure) is constant, this effect shows up as a nonlinearity in response and where the partial pressure of oxygen is constant, this effect shows up as an altitude (inlet pressure) dependent response. As a warning device, where only one value of oxygen partial pressure is of interest, only the altitude effect is of any concern.

If the inlet gas mixture contains only oxygen and nitrogen, then a computation using (15) yields the theoretical extent of this effect, which is a maximum of 7 percent of the indication. For mixtures of oxygen enriched air where $0.209 \leq \frac{P_A}{P_1} \leq 1.00$, the maximum theoretical variation in linearity at any fixed inlet pressure is 5.4 percent of the indication. For systems which vary in altitude from sea level to 45,000 ft, the maximum theoretical variation in indication at any fixed oxygen partial pressure is 4.6 percent of the indication. Table 3 gives the measured and theoretical variation in linearity for the data in table 2 for altitudes of 18,000, 33,000, and 45,000 feet.

TABLE 3. *Linearity*

Altitude	Variation in linearity of indication in percent of indication	
	Measured	Theoretical
1000 ft		
18	2.3	2.8
33	8.7	3.9
45	21.6	3.9

We may determine the altitude effect at any particular partial pressure of oxygen by drawing individual altitude curves. As an example, the maximum altitude effect at 74 mm Hg oxygen partial pressure for altitudes from 18,000 to 45,000 ft is 10 percent. The theoretical value for these conditions is 3 percent.

Determinations of linearity and altitude effects were based on measurements of inlet pressure, partial pressure of oxygen, and the indicated differential pressure of the instrument, each of which had experimental errors. It is likely that the actual variations in linearity and altitude dependence are less than the computed maxima.

4.3. Sensitivity

Figure 6, which is a composite of data on the instrument performance, also includes a straight line going through the origin, $D_p = 0.355\ pO_2$. This is the straight line representation of the data below 45,000 ft. The experimental sensitivity of the instrument is approximately 2.82 mm Hg oxygen partial pressure per/mm Hg instrument indication.

4.4. Repeatability

a. As Partial Pressure Indicator

We may determine the repeatability of the instrument by comparison of the output indication divided by the partial pressure of oxygen values for similar points (same altitude with near oxygen partial pressures) in different runs. The 8th column of table 2 gives these values. It shows an average repeatability to within 1.1 percent with a maximum deviation of 2.2 percent.

b. As a Warning Device

As a warning device the range of oxygen partial pressure causing a warning is a function of the altitude dependence, repeatability of indication at warning point, and repeatability of pressure switch operation. It was determined that the differential pressure, when decreasing, at which the pressure switch operates to give a warning, is 25.1 to 25.4 mm Hg. Combining this information with data taken from figure 6 yields the results in table 4. For an increasing differential pressure, this pressure switch always removes the warning before the differential exceeds 27.4 mm Hg. This fact, in connection with figure 6, gives the oxygen partial pressure necessary to remove a warning as shown in table 4. At pressure altitudes from sea level to 45,000 ft, a warning is given when the partial pressure of oxygen decreases to 74.1 ± 4.5 mm Hg. The warning is always removed before the oxygen partial pressure increases to 85.6 mm Hg.

The solenoid valve, operated by the second pressure switch, is set to operate at a differential pressure somewhat above 85 mm Hg.

TABLE 4. *Oxygen partial pressures for warning*

based on figure 6

Altitude	Partial pressure of oxygen causing warning	Maximum partial pressure of oxygen necessary to remove warning
1000 ft		
0	73.5 to 74.2	79.5
18	69.6 to 70.6	76.0
33	70.1 to 72.2	77.6
45	77.6 to 78.7	85.6

4.5. Speed of Response

a. As a Partial Pressure Indicator

Since the volume of the differential pressure gage influences the time constant of the instrument, either the gage volume must be specified or the time constant given for the instrument

without a gage. The time constant was determined without a differential pressure gage by using the warning feature to determine when a particular indication had been reached. With a typical absorber charge, the time constant of the instrument without a gage is approximately 119 sec. With a time constant of 119 sec, it would take 94 sec to achieve a warning when the inlet gas is changed from air to nitrogen at sea level.

The volumes introduced by the filled absorber containers were not identical because the containers were not uniformly nor completely filled. Techniques could be evolved for more complete packing and this would of course, reduce the time constant.

b. As a Warning Device

A number of runs were made using the instrument as a warning device. The times required to achieve a warning following a discrete change in inlet gas composition are given in table 5. It is believed that a reduction of the volume between the solenoid valve and the orifice block will decrease these warning times since reducing this volume decreases dead time.

TABLE 5. *Measured times necessary to achieve a warning*

Altitude	Inlet gas		Time to warn in seconds
	Initial	Final	
1,000 ft			
0	Air	N_2	15.5
0	Air	N_2	5
0	Air	N_2	12
0	Air	N_2	11
0	Air	N_2	16
0	Air	N_2	124
0	Air	N_2	72
0	Air	N_2	27
35	O_2	N_2	27.5
35	O_2	Air	35
35	O_2	Air	48
39	O_2	Air	57
45	O_2	Air	23.5
45	O_2	Air	19.5

4.6. Absorber Life

The instrument was operated with absorber charges of approximately ½ pound. This, theoretically should have provided 3,200 mm Hg oxygen partial pressure-hours of operation. In actual practice, these absorber charges provide only about 1,200 mm Hg-hr of operation. As presently adjusted the solenoid valve operation limits the average oxygen partial pressure to about 90 mm Hg. This should provide 13 hr of operation with a ½-lb absorber charge.

4.7. Contaminating Vapors and Gases

Runs were made with entrance gases passing through a water saturator. This introduced water vapor into the gas mixture. It was found that water vapor was absorbed by the chemical thereby increasing the bridge output over that obtained with dry gas. When the saturator was removed, the instrument indication decreased below the normal dry gas value, presumably because some of the absorbed water vapor was being liberated by the chemical. Use of carbon dioxide as one of the inlet constituents produced results similar to the water vapor, indicating that it, too, was absorbed by the chemical.

If varying amounts of water vapor and carbon dioxide were to be present in the inlet gas, compensation mechanisms would have to be employed or a more specific absorber used.

5. Conclusion

An oxygen partial pressure warning device has been built that will indicate whenever the oxygen partial pressure in air oxygen mixtures is less than 74.1 ± 4.5 mm Hg at altitudes from sea level to 45,000 ft. The instrument is fundamentally rugged and is moderate in size and weight. The times required to obtain the necessary indication in response to a decrease in oxygen partial pressure are very variable and usually exceed the 15 sec desired of such an instrument.

Further reduction in the size, weight and warning time of this type instrument, as well as increased reliability are possible. The likelihood also exists that the range of oxygen partial pressure causing an indication can be reduced. This instrument demonstrates the practicality of using a critical flow pneumatic bridge as an airborne oxygen warning device. It also demonstrates the practicality of using this particular bridge for dynamic gas analysis.

The instrument is capable of measuring the partial pressure of any gas for which an absorber exists. The purpose of the y-branch is merely to serve as a nonabsorber reference. As a gas analysis instrument a separate x-branch could be provided for each constituent to be measured. By reading the differential pressure between the y-branch and each of the x-branches, multiplicity of gas constituents in a gas stream could be measured simultaneously. The bridge would always possess one more branch than the number of constituents to be measured.

This instrument can also be used to study the absorption characteristics of materials in environments of known gas composition and pressure. The differential pressure is a measure of the rate of absorption occurring, under the existing conditions.

(Paper 67C1–119)