JOURNAL OF RESEARCH of the National Bureau of Standards—D. Radio Propagation
Vol. 65D, No. 3, May–June 1961

Resolution Characteristics of Correlation Arrays [1, 2, 3]

Isham W. Linder

(September 29, 1960)

Antenna arrays which are designed to utilize correlation techniques can result in directivity patterns with very narrow beamwidth. However, analysis of resolution capabilities of these arrays indicates a marked change in expected performance in the presence of two or more signal sources. These effects are analyzed for single frequency signal sources and for randomly varying signal sources. It is shown that optimum results occur when the nonlinear processing of the antenna voltages is limited to a single multiplication. Under these conditions the correlation array has a directivity equivalent to that of a linear array of twice the length.

1. Introduction

Increasing attention has been given in recent years to the merits of correlation techniques as a means of improving the resolution capabilities of passive antenna systems. The possibility of making a decided saving in the overall size of directional antennas, even though this saving must be purchased at the cost of increased complexity of the antenna circuitry, has a distinct appeal in certain antenna applications. It is the purpose of this paper to outline the mathematical analysis of the resolution characteristics of such an antenna array and to compare these results with those which could be expected from a familiar linear additive array.

A correlation array will be defined as one in which voltages induced on the elements are multiplied together and the resulting voltage is averaged over some prescribed time interval to give a desired output voltage. There are, of course, two fundamental variables in this definition. In the first place, when there are a number of elements in the array there are a great many possible combinations of the element voltages. And, secondly, when there are undesired fluctuations in the output voltage, the time interval which is available for averaging this voltage can have a primary influence on the resolution capability of the array.

For this discussion of the mathematical analysis of resolution characteristics the first variable will be avoided by limiting the calculations to specific examples of correlation arrays. The second variable will enter the analysis and will appear in the final results.

It will be assumed that the problem at hand is the resolution of two signal sources separated by some angular displacement θ. Both single-frequency and band-limited signal sources will be considered. The signal sources are assumed to have identical power spectral density over the frequency band of interest. They cannot be resolved by frequency selectivity in the receiving system, but must be resolved by appropriate operations on the voltages induced in the elements of the array.

2. Single-Frequency Sources

In order to analyze the correlation array without becoming too deeply involved in the required calculations, a relatively simple array of four isotropic elements will be first considered. The pattern of the response of this array as a function of θ can be shown to be equivalent to that of a much larger linear additive array. This particular aspect of the capabilities of correlation arrays has been reported in the literature [Berman and Clay, 1957; Jacobson, 1958; Drane, 1959]. These articles have demonstrated that, in response to a single signal source, a correlation array with properly selected element spacing has a pattern which is exactly equivalent to that of a much larger linear array. When two signal sources are present, however, an interaction of voltages produced by the sources occurs in the multiplication processes of the correlator, and this equivalence between linear and correlation arrays has to be reanalyzed.

[1] Contribution from Department of Electrical Engineering, University of California, Berkeley 4, Calif.
[2] This research was supported in part by the Office of Naval Research under Contract Nonr-222(74).
[3] Paper presented at the Conference on Transmission Problems Related to High-Frequency Direction Finding, at UCLA, June 21–24, 1960.

The signal source (see fig. 1) located in the plane of the array and at an angular displacement θ from the main lobe axis, induces a voltage V_i on the i-th antenna element, where

$$V_i = A \cos(\omega t + \tau_i)$$

$$\tau_i = \frac{d_i}{c} \sin \theta$$

(d_i is the distance from a reference point in the line of the array to the ith element.)

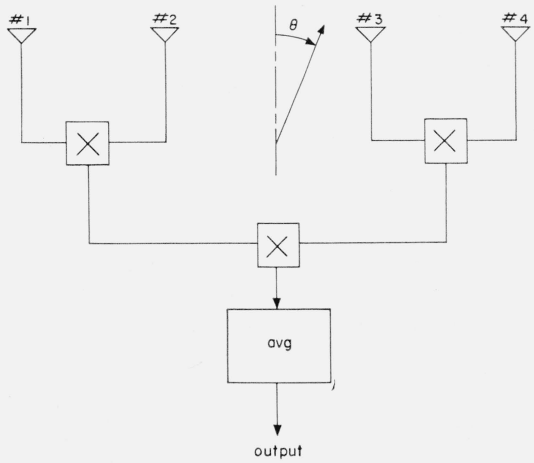

FIGURE 1. *A four-element correlation array.*

If the bandwidth of the integrating circuit is established to reject the second- and fourth-order frequencies resulting from the multiplications, the output voltage is

$$V_{\text{out}} = \frac{1}{8} A^4 [\cos \omega(\tau_1 - \tau_2 - \tau_3 + \tau_4) + \cos \omega(\tau_1 - \tau_2 + \tau_3 - \tau_4) + \cos \omega(\tau_1 + \tau_2 - \tau_3 - \tau_4)].$$

And if the relative spacing between elements is established with $d_{12} = D$, $d_{23} = D$, and $d_{34} = 2D$ (and letting $X = \frac{\omega D}{c} \sin \theta$):

$$V_{\text{out}} = \frac{1}{8} A^4 [\cos X + \cos 3X + \cos 5X].$$

But this, except for the constant term, is the voltage pattern for a six-element linear additive array with a uniform element spacing of $2D$.

So in this sense the pattern of the four-element correlation array of overall length $4D$ and the voltage pattern of the six-element linear array of overall length $10D$ are equivalent.

Berman and Clay have discussed this equivalence between correlation and linear arrays. In general, directivity patterns for a single monochromatic source have the following mathematical equivalence:

Correlation array	*Linear array*
4 elements, length $4D$	6 elements, length $10D$
6 elements, length $8D$	15 elements, length $28D$
8 elements, length $16D$	32 elements, length $62D$

However, in resolving two similar sources these patterns cannot be used directly, but must be treated with some care. For example, assume source $A(V_A = E \cos \omega_A t)$ is located on the main lobe axis and source B with the same amplitude ($V_B = E \cos \omega_B t$), is displaced through θ^0. The output voltage of the six-element linear array would be:

$$V_{\text{out}} = 6E \cos \omega_A t + 2E(\cos X + \cos 3X + \cos 5X) \cos \omega_B t.$$

Whether or not the sources are coherent, the voltage output for arbitrary movement of the sources is simply the sum of the voltage patterns of each source considered individually.

The correlation array, on the other hand, will contain cross product terms resulting from the multiplication processes whose form will depend on the coherence of the two sources and, in general, on the number of multiplication processes.

For the example of the four-element correlation array considered here, the output voltages for two conditions of coherence are·

1. For two coherent sources:

$$V_{\text{out}}=\frac{3}{8}E^4+\frac{1}{8}E^4(\cos X+\cos 3X+\cos 5X)+\frac{1}{8}E^4(3+11\cos X$$
$$+10\cos 2X+7\cos 3X+6\cos 4X+3\cos 5X+2\cos 6X).$$

2. For two sources of slightly different frequencies:

$$V_{\text{out}}=\frac{3}{8}E^4+\frac{1}{8}E^4(\cos X+\cos 3X+\cos 5X)$$
$$+\frac{1}{8}E^4(4\cos X+4\cos 2X+2\cos 3X+2\cos 4X)+\frac{1}{8}E^4(f(\cos nX\cdot\cos \delta t)$$

where δt is the frequency difference between source A and source B, and $f(\cos nX\cdot\cos \delta t)$ represents a number of terms all containing this beat frequency component.

In both of these equations the first two terms correspond to the linear array pattern, while the remaining terms arise from the nonlinearity of the correlation array. In the case of two sources with identical frequencies, the cross-product terms are constant with time and time averaging of the output voltage will not alter the result. When the sources have different frequencies, however, time averaging can be employed to reduce the beat frequency ($\cos \delta t$) part of the cross-product terms; but even in this case the resulting pattern will not be precisely equivalent to that of the six-element linear array since some of the cross-product terms will remain constant with time.

Calculation of the resolution characteristics of the correlation array is then more involved than the similar calculation for the linear additive array.

Assuming a basic spacing $D=\frac{\lambda}{2}$ the four-element correlation array of length $4D$ will resolve two sources of slightly different frequencies at approximately 19.5°. This is equivalent to the resolution of a uniform linear array with an aperture of $9D$, about twice as long.

A slightly more complex example of a correlation array is one discussed by Drane: The element on the left in figure 2 represents a uniform linear array with aperture a_1, while that on the right is a simple interferometer with aperture a_2.

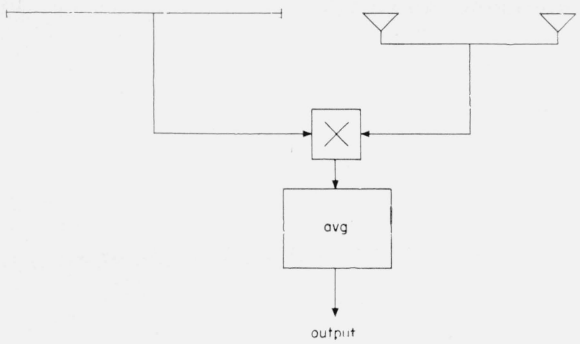

FIGURE 2. *A correlation array employing a linear array and an interferometer.*

The directivity pattern of the uniform linear array is proportional to $\frac{\sin X}{X}$ where $X=\frac{\omega}{c}\left(\frac{a_1}{2}\right)\sin\theta$. If $a_1=a_2$ and there is no spacing between the right end of the linear array and the left element of the interferometer, the directivity pattern of the correlation array is

$$V_{\text{out}} \propto \frac{\sin 4X}{4X}$$

which is the same as that of a uniform linear array of twice the length of the actual array.

However, if two coherent sources are present the output is

$$V_{\text{out}} \propto \frac{\sin 4X_A}{4X_A}+\frac{\sin 4X_B}{4X_B}+\cos(X_A+X_B)\left[\frac{\sin X_A \cos X_B}{4X_A}+\frac{\cos X_A \sin X_B}{4X_B}\right].$$

The third term again occurs because of the nonlinearity of the correlator.

Calculation of the resolution capability of this array shows that it is equivalent to a uniform linear array one and a half times as long.

These have been only two examples of the effect of cross-product terms in a correlation array. In each case considered, the effect of these terms would vary, depending on the types of signal voltages emitted by the sources and by the number of successive multiplicative processes in the correlator. If the sources were emitting complex signals which could be decomposed into a number of fixed frequency components (a pulse system with a fixed repetition rate, for example) then the cross-product terms resulting from the multiplication would become quite involved.

It should be noted that if the correlator contains only one stage of multiplication, then the cross-product terms occurring from two sources of different frequencies appear only as beat frequency components. These terms occur as a low-frequency a-c signal appearing with the desired d-c measuring voltage. In this case the cross-product terms can be minimized by time averaging the output voltage. However, if more than one stage of multiplication occurs between the antenna element and the output of the array (as was the case in the example of the four element correlation array) the cross-product terms will occur as low-frequency a-c terms and also as d-c terms. In this case the equivalence between the correlation arrays and the linear arrays is not immediately apparent but must be determined by calculation of resolution characteristics for the particular type of signal encountered.

3. Randomly Varying Sources

In those situations in which there is at best only incomplete information about the manner in which the voltage produced by a signal source will vary with time, it is necessary to consider a suitable statistical model which will impose bounds on the expected results and will provide an average description of the voltage variation. The most general such model suitable to this antenna problem is that of a band-limited voltage with a normal distribution. The source can then be described as one which produces a randomly varying voltage whose Fourier series representation becomes:

$$V(t)=\sum_{n=1}^{N} c_n \cos(\omega_n t+\Phi_n).$$

$V(t)$ is distributed normally with mean zero.

c_n has a Rayleigh distribution with $\overline{c_n^2}=2W(f_n)\delta f$, where $W(f_n)$ is the power density over a frequency interval δf centered at f_n.

Φ_n has a uniform distribution over $(0, 2\pi)$.

ω_O is the lower edge of the band of width $2\Delta f$ c/s and $\omega_i = \omega_O + \frac{2\pi i}{T}$.

The directivity pattern of the correlation array can be stated in terms of the correlation coefficient of the voltage produced by the signal source. For a four-element correlation array the expected value of the output voltage is:

$$\overline{V_1(t)V_2(t)V_3(t)V_4(t)}$$

and, since these are normally distributed voltages, this becomes:

$$[\overline{V_1(t)V_2(t)}][\overline{V_3(t)V_4(t)}]+[\overline{V_1(t)V_3(t)}][\overline{V_2(t)V_4(t)}]+[\overline{V_1(t)V_4(t)}][\overline{V_2(t)V_3(t)}]$$
$$=R(\tau_{12})R(\tau_{34})+R(\tau_{13})R(\tau_{24})+R(\tau_{14})R(\tau_{23})$$

where $R(\tau_{ij})$ is the correlation coefficient of the voltages induced on elements i and j.

If the signal source is band limited, $f_c \pm \Delta f$, and the signal has a uniform power spectral density over this pass band, then

$$R(\tau)=R(0)\,\frac{\sin 2\pi\Delta f\tau}{2\pi\Delta f\tau}\cos 2\pi f_c\tau. \qquad \text{(autocovariance)}$$

With proper spacing of the correlation array elements this again can be put in a form resembling the directivity pattern of a uniform linear array.

$$\overline{V_1(t)V_2(t)V_3(t)V_4(t)}=3R(O)^2[A\cos X+B\cos 3X+C\cos 5X]$$

where $X=2\pi f_c\frac{D}{c}\sin\theta$ and the coefficients A, B, and C are combinations of $\frac{\sin 2\pi\Delta f\tau}{2\pi\Delta f\tau}$ terms which approach the value 1 as the receiver pass band is decreased.

If there are two such sources separated by an angular displacement θ, the output voltage of a linear array could be suitably employed to resolve the sources. An instantaneous voltage observation at various positions as the array is rotated past the sources would generally not be an adequate procedure due to the assumed randomness of the sources. Some sort of time averaging procedure (as in an average power measurement) or a procedure requiring a definite observation interval (the peak voltage occurring in the interval, for example) would be necessary.

As an example of this use of a linear array, assume that the output of the array will be squared and resolution obtained by power measurement. As before, assume there are two sources, source A on the main lobe axis and source B displaced through $\theta°$. Then before squaring:

$$V_{\text{out}}=6V_A+2V_B(\cos X+\cos 3X+\cos 5X)$$

$$V_{\text{out}}=6\sum_{n=1}^{N}c_n\cos(\omega_n t+\phi_n)+2\sum_{n=1}^{N}d_n\cos(\omega_n t+\phi_n)(\cos X+\cos 3X+\cos 5X)$$

After squaring:

$$V_{\text{out}}^2=36V_A^2+24V_AV_B(\cos X+\cos 3X+\cos 5X)+4V_B^2(\cos X+\cos 3X+\cos 5X)^2$$

$$V_{\text{out}}^2=36\left[\sum_{n=1}^{N}\sum_{m=1}^{N}c_nc_m\cos(\omega_n t+\phi_n)\cos(\omega_m t+\phi_m)\right]$$
$$+24\left[\sum_n\sum_m c_nd_m\cos(\omega_n t+\phi_n)\cos(\omega_m t+\phi_m)(\cos X+\cos 3X+\cos 5X)\right]$$
$$+4\left[\sum_n\sum_m d_nd_m\cos(\omega_n t+\phi_n)\cos(\omega_m t+\phi_m)(\cos X+\cos 3X+\cos 5X)^2\right]$$

The first and last terms of this expression have χ^2 distributions with mean values equal to the power from the signals; the middle term has a bivariate normal distribution with mean zero. So the average value of the squared voltage term will be equal to the power received from the two sources. The instantaneous value will fluctuate about the average, and time averaging can be used to minimize the effect of the fluctuation.

An expression for the effect of an averaging device can be obtained from general filter considerations [Middleton, 1960]. If $h(t)$ is the effective weighing function of a linear measuring device and $x(t)$ is the function to be measured, a measurement $M_x(T)$ made at time $t=T$ after $x(t)$ has been introduced at $t=0$ can be expressed by the convolution

$$M_x(T)=\int_0^T h(u)x(T-u)du \qquad h(u)=0,\ u<0$$

where $(0,T)$ is the observation interval. $M_x(T)$ will vary from observation to observation, fluctuating about the expected value $\overline{M_x(T)}$ with a variance $\sigma^2=\overline{M_x(T)^2}-[\overline{M_x(T)}]^2$.

In the general situation, $x(t)$ is at least wide sense stationary, and

$$\overline{M_x(T)}=\int_0^T h(u)\overline{x(T-u)}du$$

$$\overline{M_x(T)^2}=\int_0^T\int_0^T h(u)\overline{x(T-u)x(T-v)}h(v)du\,dv$$

$$=\int_0^T\int_0^T h(u)\psi_x(u-v)h(v)du\,dv$$

where ψ_x is the autocovariance coefficient of the function to be measured. For an ideal integrator $h(u)=\frac{1}{T}$, $0<u<T$. And

$$\overline{M_x(T)}=\overline{x(t)}$$

$$\overline{M_x(T)^2}=\frac{2}{T}\int_0^T\left(1-\frac{s}{T}\right)\psi_x(s)ds$$

The correlation coefficient of the power function can be obtained in terms of the correlation coefficient of the voltage. The voltage has a normal distribution; the correlation coefficient of the power.

This is, of course, a direct indication of the fluctuation of the output power about the mean value. For this case of two statistically similar sources, the variance determines, in terms of confidence intervals, the difference in mean power which the array receives when it is directed at one of the sources and when it is directed between the sources in order for the sources to be consistently resolved.

Now, with this description of the resolution process by a linear array it is possible to investigate the resolution process in a correlation array and to compare the resultant effects. As in the previous case, it is necessary to determine the mean value of the output voltage and to determine the correlation coefficient of this voltage in order to establish bounds on the expected fluctuation of the measurement.

The expected value of the voltage produced at the output of a four-element correlation array by two independent sources (source A and source B) can be calculated either directly or by the characteristic function method and can be expressed in terms of the correlation coefficients of the individual voltages.

With two sources present, the voltage on the ith element becomes:

$$Vi(t)=V_A(t+\tau_i)+V_B(t+\tau_i).$$

and

$$\overline{M_x(T)}=\overline{V_1(t)V_2(t)V_3(t)V_4(t)}=\{[R_A(\tau_{12})R_A(\tau_{34})+R_A(\tau_{13})R_A(\tau_{24})+R_A(\tau_{14})R_A(\tau_{23})]$$
$$+[R_B(\tau_{12})R_B(\tau_{34})+R_B(\tau_{13})R_B(\tau_{24})+R_B(\tau_{14})R_B(\tau_{23})]+[R_A(\tau_{34})R_B(\tau_{12})+R_A(\tau_{12})R_B(\tau_{34})$$
$$+R_A(\tau_{24})R_B(\tau_{13})+R_A(\tau_{23})R_B(\tau_{14})+R_A(\tau_{14})R_B(\tau_{23})+R_A(\tau_{13})R_B(\tau_{24})]\}.$$

$\overline{V(t)^2V(t+s)^2}$, will be the coefficient of $\frac{(iu)^2}{2}\frac{(iv)^2}{2}$ in the expansion of the characteristic function of $V(t),V(t+s)$.

$$C(u,v,s)=\overline{\exp\,[iuV(t)+ivV(t+s)]}=\exp\,[-\tfrac{1}{2}R(0)(u^2+v^2)-R(s)uv]$$

where $R(s)$ is the correlation coefficient of the voltage. Then

$$\psi(s)=R(0)^2+2R(s)^2.$$

If it is assumed that the receiver circuits have a rectangular pass band, $f_c\pm\Delta f$, and that the power spectral density of the signal sources is uniform over this pass band, then

$$R(0)=\text{average power from the signals}$$

$$R(s)=R(0)\,\frac{\sin 2\pi\Delta fs}{2\pi\Delta fs}\cos 2\pi f_o s.$$

Substituting these values into the equations describing the ideal integrator:

$$\overline{M_x(T)}=R(0)$$

$$\overline{M_x(T)^2}=\frac{2}{T}\int_0^T\left(1-\frac{s}{T}\right)(R(0)^2+2R(s)^2)ds$$

$$=[\overline{M_x(T)}]^2\left[1+\frac{4}{T}\int_0^T\left(1-\frac{s}{T}\right)\left(\frac{\sin 2\pi\Delta fs}{2\pi\Delta fs}\right)^2(\cos 2\pi f_c s)^2ds\right]$$

which, for large values of $2\pi\Delta fT$, becomes

$$\overline{M_x(T)^2}=[\overline{M_x(T)}]^2\left(1+\frac{\pi}{2\pi\Delta fT}\right)$$

The variance of this averaged power then is

$$\sigma^2=\frac{\pi}{2\pi\Delta fT}\,[\overline{M_x(T)}]^2=\frac{\pi}{2\pi\Delta fT}R(0)^2.$$

The first and second terms of this expression give the expected voltage due to each source individually. The third term contains the cross product components which occur as a result of the two stages of multiplication that the element voltages undergo.

The variance of this output voltage could be calculated directly; however, the large number of terms in the final expression would make this quite laborious. A good approximation to this variance can be made by calculating the variance of the voltage produced by a single source located on the main lobe axis. The correlation function of this voltage can be determined readily by the characteristic function method:

$$\psi(s)=9\;R(\mathrm{O})^4+72\;R(\mathrm{O})^2R(s)^2+24\;R(s)^4.$$

If we again assume an ideal integrator and a band limited process, the variance becomes:

$$\sigma^2 = \frac{14\pi}{3(2\pi\Delta fT)} [\overline{M_x(T)}]^2. \qquad (2\pi\Delta fT) >> 1.$$

This variance is seen to be somewhat more than four times that found for the single multiplication required in the power calculation. And, in general, if more elements are added to the correlation array, this variance will increase approximately by a factor of four for each pair of elements added to the array.

This increase in variance indicates an increase in the fluctuation component of the output voltage as the number of multiplicative processes are increased. This results in an increase in the integration time required to reduce this fluctuation to some prescribed level, and, therefore, makes this time averaging interval an important part of any discussion of the resolution capabilities of these arrays.

Band-limited random signals

Resolution at the 95% confidence level

Four-element correlation array length 4D		Aperture of equivalent uniform linear array
Resolution	Integration time	
19°	$2\pi\Delta fT = 56$	9.6D
18°	$2\pi\Delta fT = 303$	9.4D
17.5°	$2\pi\Delta fT = 2790$	9.2D

$D = \frac{\lambda}{2}$

4. Summary

An analysis of the expected performance of antenna arrays which utilize correlation techniques indicates the possibility of a marked saving in antenna size. In the general situation, the multiplicative processes in the correlator will introduce cross-product terms which will appear as low-frequency fluctuations in the antenna output voltage. Additionally, these cross-product terms may contribute to the d-c output voltage. The appearance of the cross-product terms complicates the calculation of resolution capabilities, and generally necessitates the definition of a time-averaging interval in any discussion of this resolution. In the examples considered here, it was evident that the directivity pattern alone did not describe the performance of a correlation array in resolving two signals. In these examples the relatively simple correlation arrays had resolution capabilities equivalent to those of uniform linear arrays of about twice the length.

5. References

Berman, A., and C. S. Clay, Theory of time averaged product arrays, J. Acoust. Soc. Am. **29,** No. 7, p. 805 (July 1957).

Drane, Charles, Phase modulated antennas, Air Force Cambridge Research Center, Tech. Rep. 59–138 (April 1959).

Jacobson, M. J., Analysis of a multiple receiver correlation system, J. Acoust. Soc. Am. **29,** No. 12, p. 1342 (December 1957); **30,** No. 11, p. 1030 (November 1958).

Middleton, David, An introduction to statistical communication theory, Chapter 16 (McGraw–Hill, New York, N.Y., 1960).

(Paper 65D3–126)