U. S. Department of Commerce
National Bureau of Standards

Research Paper RP1767
Volume 38, February 1947

Part of the Journal of Research of the National Bureau of Standards

Concentration of Isotopes of Chlorine by the Countercurrent Electromigration Method [1]

By Samuel L. Madorsky and Sidney Straus

The isotope ^{35}Cl was concentrated in the anode compartment of an electromigration cell, with NaCl as the electrolyte. The operation was regulated by means of a stationary boundary between solutions of NaOH and NaCl as the lower and upper liquids, respectively. A concentration of ^{35}Cl from the normal value of 75.76 percent to a maximum value of 80.7 percent was obtained in 474 hours. The maximum initial separation coefficient, ϵ—1, was 0.207×10^{-2}.

I. Introduction

Kendall and Crittenden [1] [2] attempted to separate the isotopes of chlorine by the ionic-migration method. They transported chlorine ions in a tube filled with agar-agar through a distance of 100 feet by means of a moving boundary. An atomic-weight determination of chlorine in the forward section of the gel failed to detect any change in the isotope ratio. More recently, a new method [2] based on the principle of countercurrent electromigration, has been developed at the National Bureau of Standards for the separation of isotopes. The successful application of this method to the concentration of ^{39}K and ^{41}K [3] from solutions of K_2SO_4 and KCl suggested the possibility of concentrating the isotopes of chlorine by this method. The present paper describes some experiments designed to concentrate ^{35}Cl from a solution of NaCl.

II. Outline of Problem

Chlorine appears in nature as a mixture of 75.4 percent ^{35}Cl and 24.6 percent ^{37}Cl [4]. In an electromigration cell $^{35}Cl-$ can be concentrated in the anode compartment, provided the original isotopic ratio is maintained in the cathode compartment. However, if the chloride ion is allowed to react at the anode to form chlorine gas, it will escape. This reaction was prevented by interposing a solution of sodium hydroxide around the anode to form a boundary between the chloride and hydroxide solutions.

Sodium chloride in the ratio $NaCl:H_2O=1:30$ was used as the electrolyte. As the transport numbers of Na^+ and Cl^- are approximately 0.40 and 0.60, respectively, the anode restituent was 1:18 NaOH, whereas the cathode restituent was 1:12 HCl. Characteristic properties of the solutions employed are shown in table 1. As seen from this table, 1:18 NaOH has a greater density than 1:30 NaCl, and, therefore, the alkali solution should be the lower layer, and the salt solution should be the upper layer at the anode boundary. Such an arrangment is shown in the gooseneck-shaped anode compartment in figure 1.

TABLE 1.—*Solutions employed in the chlorine electromigration experiments*

Solute	Ratio solute:H_2O	Concentration	Density at 25° C	Normality
		Percent		
NaCl	1:30	9.76	1.067	1.782
NaOH	1:18	10.98	1.118	3.067
HCl	1:12	14.43	1.068	4.225

[1] This paper will appear in volume 6, division III, of the Manhattan Project Technical Series.
[2] Figures in bracket indicate the literature references at the end of this paper.

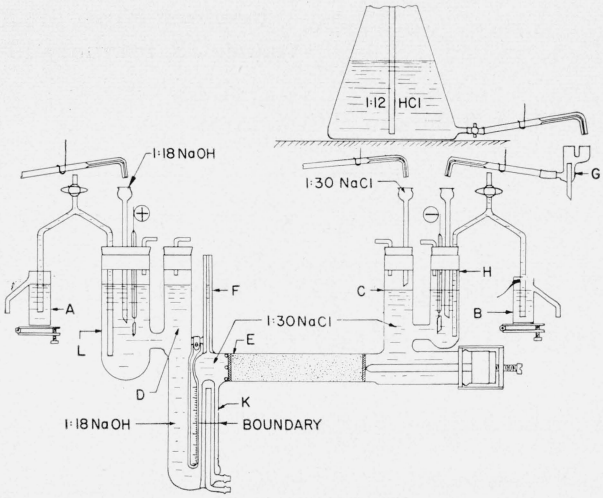

FIGURE 1.—*Diagram of electromigration cell used in the chlorine experiments.*

III. Apparatus and Experimental Procedure

The apparatus is shown diagrammatically in figure 1 and photographically in figure 2. The packing was 2 cm in diameter and 10 cm long. It consisted of No. 107 ballotini glass beads in experiment 1 and of 60- to 100-mesh Ottawa sand in the other experiments. The packing supports were No. 40 bead frits. At the anode end the frit was held in place by means of a sealed-in glass cross, and at the cathode end it was supported by means of a screw and a glass rod passing through a rubber stopper. In experiments 2 and 3, frits similar to those at the ends of the packed column were also placed in the packing at intervals of about 3 cm in order to impart greater rigidity to the compressed sand. The wall thickness of the packed tube was 1 mm. The electrode sections were supplied with manually controlled droppers, siphons, and manually controlled overflow cups (*A* and *B*, fig. 1). The cathode was of the flushed type receiving 1:30 NaCl solution in addition to a stoichiometric amount of 1:12 HCl. The electrodes were made of platinum gauze, about 4 cm^2 in area.

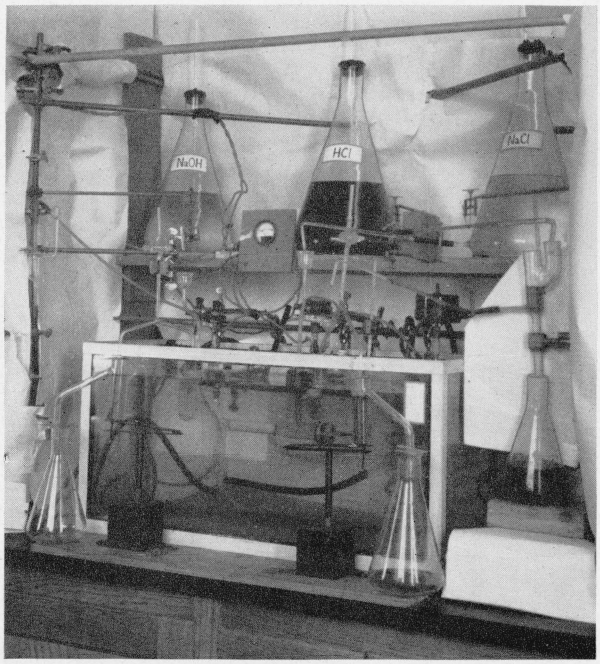

FIGURE 2.—*Electromigration cell assembly showing dropper and constant level devices.*

The boundary was maintained between 1:30 NaCl and 1:18 NaOH as the upper and lower liquids, respectively, in an annular space, *K*, between the outer tube and the inside cooler, as shown in figure 1. The boundary ring had an inside diameter of 13 mm, was 1.5 mm wide, and had a total area of 0.6 cm^2. The anode volume, i. e., the volume of liquid between the boundary and the packing, was about 10 ml. The boundary is shown in figure 3. Pertinent data of all the experiments are shown in table 2.

TABLE 2.—*Experimental details and results*

Experiment No.	Packing	Potential	Anode volume	Initial $(\epsilon-1)\times10^2$
		amp	*ml*	
1	100-mesh ballotini glass beads, with no intermediate frits.	0.430	10.4	0.115
2	60- to 100-mesh sand, 3 intermediate frits.	.430	10.4	.128
3	do	.430	11.0	.180
4	60- to 100-mesh sand, no intermediate frits.	.500	11.0	.207
5	do	.500	11.0	.183

In filling the cell, 1:18 NaOH solution was first poured into the anode compartment to the level where the boundary was expected. Sodium chloride solution (1:30) was then poured into the cathode compartment and allowed to seep through the packing into the anode volume space *E* (fig. 1). Further additions of NaOH solution kept the junction between the two liquids in the neighborhood where the boundary was desired. After the cell was filled to the proper levels, the current was turned on and the addition of restituents

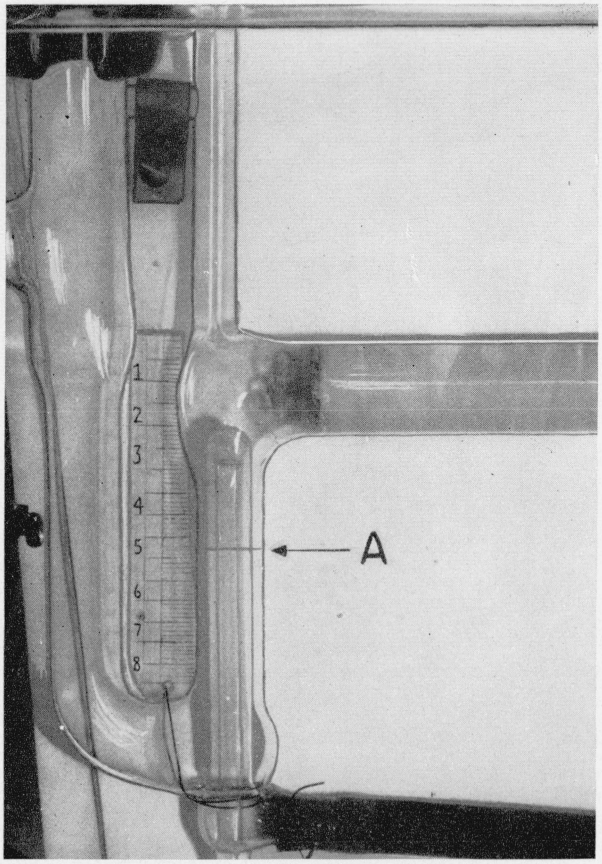

FIGURE 3.—*Details of cathode compartment.*
A, Boundary.

started. A sharp boundary appeared within a few minutes.

The current in all the experiments was about 0.5 amp and the voltage between the electrodes about 80.

The operation was continuous, requiring little attention. In the daytime, drop rates were adjusted two to three times, while during nights the cells were left without attention. Fluctuations of the boundary level during off-duty periods were generally within 1 cm, but occasionally it would reach a maximum of 2 cm. As the cross section of the annular space, K (fig. 1), was 0.6 cm^2, a 1- to 2-cm variation of the boundary level corresponded to about 5 to 10 percent in anode volume, V_a. Variations of drop rates were chiefly caused by changes in room temperature.

The chlorine electromigration cells seemed to be more sensitive to the pH condition of the cathode, i. e., to the rate of addition of HCl than to the rate of addition of NaOH or NaCl. In order to control the acid rate more closely, it was first fed into a constant overflow cup, G (fig. 1), and from there into the cathode compartment H through manually controlled droppers. The cells operated best when the cathode overflow from B was slightly acid, as was indicated by methyl red introduced with the HCl restituent. The stoichiometric amounts of HCl and NaOH solutions required per ampere hour are 9.4276 and 13.5902 g, respectively. The actual amount of HCl added was slightly in excess of that required theoretically. For NaOH an excess of about 20 g per ampere hour was used. This excess was bypassed through a siphon, as shown in figure 1. The amount of cathode flushing restituent, NaCl, added was 24 g per ampere hour. The cells under normal operation ran slightly alkaline above the boundary and through the packing column, as was indicated by methyl red fed into the anode with the NaOH restituent.

As a check on the operation of the cells, analyses of the anode and cathode overflow liquids, as well as of samples drawn from various parts of the cell, were made at intervals. Overflow liquid from A (fig. 1) and samples drawn from D were analyzed for NaOH. Overflow liquid from B was analyzed for NaCl and HCl, and samples drawn from C were analyzed for NaCl and NaOH. No chlorine was found either in cup D or in the anode overflow

TABLE 3.—*Analysis of cell and overflow liquids in experiments 2 and 3*

Hours after start	Overflow from A, NaOH	Liquid from cup D, NaOH	Overflow from B		Liquid in cup C	
			NaCl	HCl	NaCl	NaOH
EXPERIMENT 2						
	%	%	%	%	%	%
0	10.95	10.95	9.76	0	9.76	0
65	10.15	--------	9.93	.21	10.87	.24
137	9.34	10.58	--------	--------	--------	--------
209	10.24	--------	10.02	.40	10.91	.23
305	10.30	--------	10.05	.30	10.86	.22
411	10.09	--------	9.94	.43	10.88	.22
EXPERIMENT 3						
0	10.95	10.95	9.76	0	9.76	0
69	10.88	--------	9.77	.93	9.76	.52
93	10.55	10.64	--------	--------	--------	--------
237	10.57	--------	9.87	.25	10.43	.22
309	10.39	--------	9.75	.48	10.31	.20
405	10.31	--------	9.79	.32	10.25	.23
501	10.53	--------	9.99	.17	--------	--------

liquid. As an illustration, analyses for experiments 2 and 3 are shown in table 3.

As seen from this table, there was little change in the composition of the liquids in the cells during operation.

IV. Mass-Spectrometer Analysis And Interpretation of Resulrs

A sample of liquid weighing about 0.2 g was drawn from the anode volume, E, by inserting a capillary through a small tube, F (fig. 1). In preparing the sample for analysis in the mass spectrometer, it was placed through A in leg B of the specially designed sampler shown in figure 4 and evaporated to dryness. About 0.3 to .05 ml of concentrated H_2SO_4 was then placed in leg C of this sampler, the latter connected to a vacuum system through ground-glass joint E, and highly evacuated. Stopcock D was then closed and the sampler removed from the vacuum system. Before attaching the sampler to the mass spectrometer by means of E, it was tilted so as to allow the H_2SO_4 to flow from leg C into leg B. The HCl formed in the reaction between NaCl and H_2SO_4 was then analyzed for the isotopes of chlorine. The analyses were carried out in a Consolidated mass spectrometer.

Concentration of ^{35}Cl in ordinary chlorine was measured in five samples of chemically pure NaCl as follows:

Analysis No.	^{35}Cl
	Percent
1	75.74
2	75.73
3	75.79
4	75.74
5	75.79
Average	75.76

From the above ratio, $R_0=N_1/N_2=^{35}Cl/=3.12$

The results are shown in table 4 in terms of percentage of ^{35}Cl, ratio $R_t=N_1/N_2$ at time t and separation factor R_t/R_0. Figure 5 shows concentration of ^{35}Cl plotted against time in hours.

The separation coefficient, ϵ, was calculated by means of eq 10 of RP1765 [3].

$$\frac{I^- t(\epsilon-1)N_1N_2}{F}=\frac{V_aC}{1{,}000}\times\frac{R_t-R_o}{(R_t+1)(R_o+1)},$$

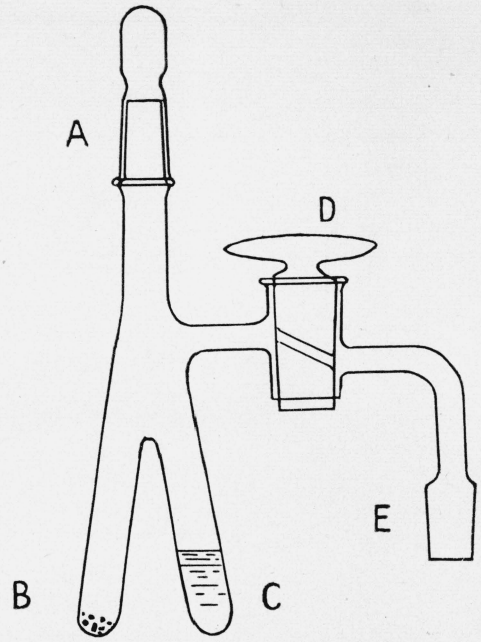

FIGURE 4.—*Sample tube used in mass-spectrometer analysis of ratio of chlorine isotopes.*

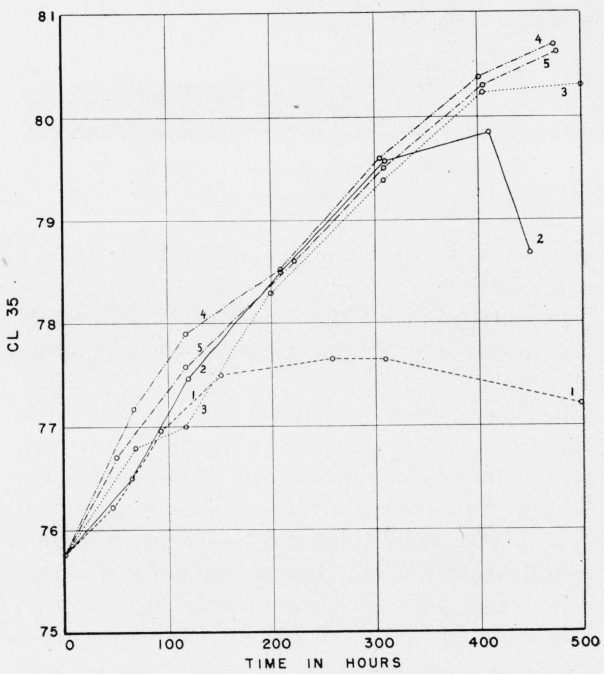

FIGURE 5.—*Curves showing increase in percentage of ^{35}Cl with time in five similar experiments.*

where

I^-=negative current=total current I times chlorine transport number T_{Cl}, which in this case is 0.6

t =time in seconds

V_a = anode volume
C = normality of NaCl solution = 1.782
F = Faraday constant.

The above equation can be written in the following simplified form:

$$\epsilon - 1 = 0.03543 \frac{V_a C}{I^- t_1} \times \frac{R_{1_t} - 3.12}{R_{t_1} + 1},$$

where t_1 is time in hours. The values for $\epsilon - 1$ are shown in the last column of table 4.

TABLE 4.—*Concentration of* ^{35}Cl *and separation coefficient*

Experiment No.	Hours after start	^{35}Cl	$R_t = {}^{35}\mathrm{Cl}/{}^{37}\mathrm{Cl}$	Separation factor, R_t/R_0	$(\epsilon-1)\times 10^2$
		Percent			
1	0	75.76	3.12	1.000	----------
	46	76.22	3.21	1.029	0.115
	92.5	76.96	3.34	1.071	.136
	152	77.50	3.44	1.103	.117
	259	77.65	3.47	1.112	.075
	312	77.64	3.48	1.115	.064
	499	77.21	3.39	1.087	.031
2	65	76.50	3.26	1.045	0.128
	120	77.47	3.44	1.103	.152
	209	78.50	3.65	1.170	.138
	310.5	79.57	3.89	1.247	.128
	411	79.85	3.96	1.269	.104
	450	78.68	3.69	1.183	.068
3	69	76.80	3.31	1.061	0.180
	117	77.00	3.35	1.074	.127
	200	78.30	3.61	1.157	.150
	309	79.39	3.85	1.234	.137
	405	80.23	4.06	1.301	.129
	501	80.31	4.08	1.308	.106
4	66.5	77.17	3.38	1.083	0.207
	118	77.90	3.52	1.128	.174
	209	78.52	3.66	1.173	.128
	305	79.60	3.90	1.250	.121
	402	80.38	4.10	1.314	.111
	474	80.70	4.18	1.340	.100
5	50	76.71	3.29	1.055	0.183
	118	77.58	3.46	1.109	.150
	222	78.61	3.68	1.180	.125
	309	79.51	3.88	1.244	.117
	405	80.30	4.08	1.308	.108
	477	80.63	4.16	1.333	.98

V. Conclusions

Glass-bead packing did not stand up well because of the alkaline nature of the anode, as seen from results of experiment 1. Sand, on the other hand, stood up well, as shown by the result of experiments 2 to 5, inclusive. Inserting fritted disks in the packing in experiments 3 and 4 did not seem to make any difference, as is evident by comparing the results of these experiments with those of experiments 4 and 5. Results of all the experiments (in case of experiment 1, up to 150 hr) are in good agreement. At about 400 hours, the curves (fig. 5) begin to drop. This is due to the accumulation at the anode end of the packing of silica gel resulting from the action of NaOH on the glass. A close examination of figure 3 shows a jelly-like mass in front of the anode end of the packing. The highest separation was obtained in experiment 4, where the concentration of ^{35}Cl changed from 75.76 to 80.70 percent, after 474 hours of operation, representing an increase of 4.94 percent.

The initial ϵ^{-1} for the first 50 to 70 hours varies from 0.0115 to 0.0207. There is in every case a tapering off of these values with time, due undoubtedly to the accumulation of ^{35}Cl in the packing caused by diffusion and fluctuation of the boundary.

The authors thank V. H. Dibeler and Dorothy Thompson for making the mass-spectrometer analyses reported in this paper.

VI. References

[1] James Kendall, Science **67,** 163 (1928).
[2] A. Keith Brewer, Samuel L. Madorsky, and James W. Westhaver, Science **104,** 156 (1946).
[3] A. Keith Brewer, S. L. Madorsky, et al., The concentration of isotopes of potassium by the countercurrent electromigration method, J. Research NBS **38,** 137 (1947) RP1765.
[4] Sixth Report of the Committee on Atoms of the International Union of Chemistry (1941–42).

WASHINGTON, August 5, 1946.