CONTINUOUS SPECTRUM X RAYS FROM THIN TARGETS[1]

By Warren W. Nicholas[2]

Technique is described for the use of thin metal foils as anticathodes in X-ray tubes. The continuous radiation from these foils is analyzed by a crystal, the intensities being measured by a photographic comparison method. It is indicated that the high-frequency limit of the continuous spectrum from an infinitely thin target consists of a finite discontinuity. (The corresponding thick target spectrum has only a discontinuity of slope.) The energy distributions on a frequency scale are approximately horizontal, for gold and for aluminum, and for $\psi=40°$, $90°$, and $140°$, where ψ is the angle between measured X rays and cathode stream; this agrees with Kramer's, but not with Wentzel's, theory. The intensities for these values of ψ are roughly 3:2:1, respectively; theories have not yet been constructed for the variation with ψ of resolved energy, but it is pointed out that the observations do not support a supposed quantum process in which a single cathode ray, losing energy $h\nu$ by interaction with a nucleus, radiates a single frequency ν in the continuous spectrum. The observations do not support the "absorption" process assumed by Lenard, in which cathode rays, in penetrating a metal, suffered large losses of speed not accompanied by radiation. The manner in which thick target spectra are synthesized from thin is discussed, and empirical laws are formulated describing the dependence on ψ of thick target continuous spectrum energy. A structure for the moving electron is proposed which explains classically X ray continuous spectrum phenomena, and seems to have application in other fields as well.

CONTENTS

	Page
I. Introduction	838
II. Method	839
1. Source of X rays	839
2. Spectral analysis of X rays	841
III. Apparatus	842
1. X-ray tube	842
2. Spectrographs	844
IV. Results	845
1. Shape of the high-frequency limit	845
2. Continuous spectrum energy distribution	849
V. Discussion	851
1. Passage of cathode rays through matter	851
2. Synthesis of thick target spectra	851
3. Mechanism of radiation	853
4. Structure of the moving electron	859
VI. Bibliography	870

[1] A preliminary report of these results was presented at a meeting of the American Physical Society, April, 1928.

[2] This work was done while the author was a National Research Fellow at Cornell University.

I. INTRODUCTION

Past experiments performed for the purpose of discovering the laws of X-ray emission have generally utilized the conventional X-ray tubes, with massive anticathodes, for which, unfortunately, experimental conditions are not so simple as could be desired. For example, the cathode rays in such a tube have a definite uniform speed v_0 only at the instant they strike the anticathode; in their impacts with the atoms of the target, they are gradually slowed down to zero, so that, in reality, the X rays are produced by cathode rays of all speeds between zero and v_0. This loss of speed has been corrected for, and the laws of continuous spectrum emission derived (1) [3] for uniform cathode ray speeds on the basis of the Thomson-Whiddington-Bohr law and the total energy law, but this latter is not known for directions other than perpendicular to the cathode stream, and there is some question as to whether the former law is applicable to the present case (2, 3, 4). Perhaps the most serious doubt in this respect is due to the experiments of Lenard (3), who claimed that a large percentage of the cathode rays were not slowed up gradually but suffered large losses of speed ("absorptions") in encountering the atoms of the target.[4]

Another difficulty with experimental conditions inside the conventional X-ray tube is the uncertainty as to the direction of motion of the cathode rays which have penetrated the anticathode. The laws for calculating these changes of direction, which are due to a slow diffusion as well as to sharper deflections (5), have not yet been investigated in such a way as to allow their application to the present problem in the same way as the Thomson-Whiddington-Bohr law was applied to the loss of speed.

A third difficulty with thick targets is due to deflections of the cathode rays inside the target such as to cause a considerable fraction of them to leave the focal spot, reenter the space between cathode and anode, but, due to the field, come back to strike other parts of the anode (2, 6, 7). The X rays produced by these stray cathode rays are not ordinarily included in the measurements, and since their spectrum distribution is different (2) from that of the X rays coming from the focal spot it is evident that even the mathematical form of the laws of emission will be influenced by their neglect. The effect is not at all inappreciable, as this "stray" X-ray energy is of the order of one-fifth of the whole (7).

Other difficulties, such as the correction for absorption in the target, and the determination of the initial direction of the cathode stream

[3] The figures given in parentheses here and throughout the text relate to the reference numbers in the bibliography given at the end of this paper.

[4] For an excellent discussion of these ideas, together with an account of experimental and theoretical work on the continuous spectrum, see Kulenkampff, Handbuch der Physik, **23**, pp. 433–476.

for a target face inclined to the cathode stream are of comparatively small importance, and since these have been adequately discussed in previous papers (1, 2) they will receive only passing mention here.

II. METHOD

1. SOURCE OF X RAYS

The obvious way to simplify these experimental conditions is to use as target a foil so thin that only a very small proportion of the cathode rays in passing through the foil suffer appreciable deflection and loss of speed. This means, for ordinary voltages (of the order of 50 kv), films of a thickness of the order of 10^{-5} cm, depending on the density and atomic number of the metal used.[5]

The outstanding difficulty here is the measurement of X-ray energy from such a foil, since comparatively low current input must be used in order to prevent melting the foil. With a thick target, heat is conducted away from the focal spot to the mass of metal, but with these thin targets the heat must be dissipated chiefly by radiation. Now, the amount of energy (H) generated per unit time per unit area of these foils should be equal to $i\Delta V$ where i is current density; an application of the Thomson-Whiddington-Bohr law shows that H is approximately proportional to $\frac{i\Delta x}{V}$ for a given material. This energy appears mostly as heat energy—the X-ray energy being correspondingly small—thus the thinner the foil the less the heat it must dissipate. But the foil radiates heat proportional to its two surfaces, so the thinner the foil the greater the current density possible without melting the foil; in fact, it appears that for a given material and voltage $i_{max}\Delta x$ is practically constant. (For gold this constant is of the order of 10^{-5} milliamperes cm^{-1} at 40 kv.) Also the X-ray energy per unit area is proportional to $i\Delta x$, other things being equal; thus, no matter how thin the target, there is a definite limit to the X-ray energy obtainable at a given voltage per unit area of thin target of given material.

The relation $H \propto \frac{i\Delta x}{V}$ had a curious consequence in the experiments.

---

[5] For the calculation of the loss of speed the Thomson-Whiddington-Bohr law (8) is used, provisionally, since the experiments performed on metal foils to test this law have so far been applied not to all the cathode rays but only to those which penetrate with the least energy loss. Adopting the form

$$\frac{d(V^2)}{dx} = -b$$

where V is the equivalent voltage of the cathode rays, dx is the thickness of the foil (strictly, for infinitesimal thickness), and b is a constant roughly equal to 40×10^4 times the density of the metal if V is in kilovolts and x is in centimeters. The loss of speed of the cathode rays in the present experiments corresponded usually to a loss of voltage $\left(\Delta V = \frac{b\Delta x}{2V}\right)$ in the neighborhood of 1 kilovolt. The deflections of the cathode rays are also calculable by formula (5) for the case when the foils are so thin as to approximate conditions for single scattering. In the present experiments, however, it was impractical to use such thin foils, and the deflections were estimated by direct experiment (see below).

Where relatively high current densities were used it was found necessary in shutting off the power to reduce the filament current before cutting off the voltage. Otherwise, due to the gradual discharge of the condensers of the filter system (see below), there was an instant at which normal current flowed through the tube (the potential being far above the saturation value) at low voltage, with consequent melting of the foil. Strictly speaking, this effect will be enhanced by the increased deflections in the target at lower voltages (5) which will, in general, contribute to the path lengths in the foil and consequently to $i\Delta x$; that is, H really increases faster than $1/V$.

The dependence of H on Δx is readily shown. In one experiment, for example, an aluminum foil of 0.05 mm thickness melted for current densities and voltages which did not affect a 0.7 μ foil of the same metal. This dependence, however, holds also only within narrow limits. If the aluminum was still further increased in thickness (to 1 mm), it did not melt, due undoubtedly to the increased conduction (negligible for very thin foils) away from the focal spot to parts of the foil not struck by cathode rays.

Several methods of support for the foils were used. It was essential, of course, that the electrical contact to the foils should be good in order that the foil remain accurately at the positive potential. In some of the experiments the gold foils were suspended from a brass support to which they were soldered with Wood's metal. Usually, however, the foils were suspended from an aluminum frame to which they were clamped.

In order that the source of X rays remain fixed, it was necessary that no fields exist near the foils to deflect them away from their vertical position. Thus, the X-ray tubes were designed so that the foils were practically entirely inclosed in a metal container at the same potential as the foil. The importance of this condition was evident in some experiments in which a part of the metal inclosure had been only insecurely connected electrically. When the cathode ray current was turned on, the foil began to swing, more and more violently, until it tore itself to pieces.[6]

In these experiments there is a source of error which apparently can not be entirely eliminated. It is due to the fact that there are superposed on the X rays of which a measurement is desired other X rays, generated chiefly by stray cathode rays. Most of these stray cathode rays are those which have penetrated the foil, struck the end wall of the tube, and been "reflected" to strike again the foil and the side walls of the tube. X rays produced on the side walls in the regions which are lined up with the slits necessarily affect the measurements. Apparently no arrangement of fields can entirely

[6] The synchronization of disturbing field with foil position, which is necessary for such an effect, could be caused by a variation with foil position of cathode-ray deflections, which, in turn, affected the charging of the partially insulated metal piece.

eliminate the reflection from the end walls of the tube, but by increasing the distance from the foil to the end wall the effect may be made as small as desired. The errors are further reduced by coating the inner walls of the tube with a substance of low atomic number, which reduces both the reflections from the end wall and the production of X rays in the side walls. However, all the undesired X rays mentioned above are generated practically uniformly over areas which are large compared with the focal spot. Thus, these X rays, if appreciable, can be measured independently and suitable correction applied to the measurements of X rays from the focal spot.

Duane (9, 10) has recently used a most ingenious method, in which a stream of mercury vapor forms the target. This method has the advantage over the one used in the present experiments, in that by varying the vapor density the deflections and loss of speed should be capable of being made negligibly small for any given voltage. The chief inherent difficulty would seem to be the somewhat large dimensions of the focal spot, which is sometimes a disadvantage, especially in measuring or comparing absolute spectral intensities (2).

Another method for investigating thin target spectra has been proposed by Bergen Davis (11). Since X-ray efficiency is proportional to the atomic number of the anticathode material, a target of beryllium would produce comparatively few X rays. If this target were now plated with a thin coating of heavy metal, the increment of X-ray energy would be practically due to the X rays produced in the heavy metal. Davis suggested[7] the use of tungsten as the heavy metal, since it is known that the "plating" of the beryllium could be carried out at will simply by evaporating part of the tungsten cathode filament. An objection to the method seems to be that, due to deflections inside the target, many of the cathode rays will return to the anode surface, to strike heavy atoms with reduced speed and indefinite direction. For example, the "stray cathode rays" discussed above will, in general, have penetrated the heavy metal twice before striking the anode the second time. Since most of these secondary effects will be superposed directly on the focal spot, it would seem that a satisfactory correction for them would be difficult.

2. SPECTRAL ANALYSIS OF X RAYS

The X rays produced in the thin targets were analyzed spectrally by a crystal grating, and the intensities were recorded photographically; the photographic method was used on account of its sensitiveness and flexibility. In order to interpret the photographic record in terms of energy distribution in the spectrum, it was necessary to standardize the films and spectrographs. This was done by substituting for the thin target a thick one and repeating the experiment

[7] Not published.

under identical conditions. Since the energy distribution in the thick target spectrum is known, a comparison of the two photographic records, which were treated simultaneously in the development, should permit an estimation of the energy distribution in the thin target spectrum. It is obvious that in this comparison most of the corrections (for example, absorption in windows, etc., variation of crystal reflecting efficiency, variation of sensitivity of photographic film) ordinarily so troublesome in such measurements are automatically taken care of. Absorption in the target is not thus taken care of, but in the present experiments it was negligible.

III. APPARATUS

1. X-RAY TUBE

Figure 1 shows a horizontal section and Figure 2 a vertical section of the tube used. The brass parts S, T, B, A, W, F are all at the

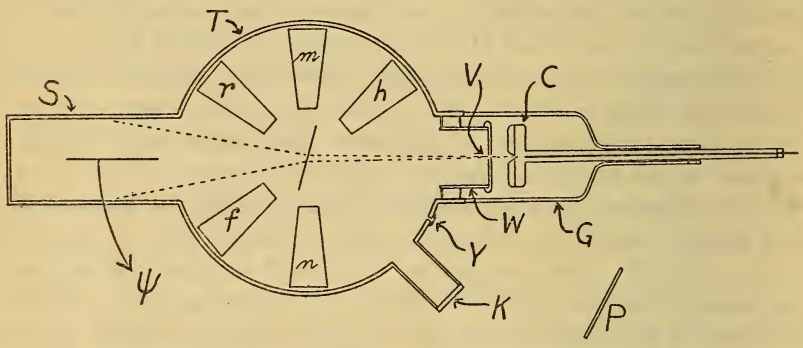

FIGURE 1.—*Horizontal section of thin target tube*

E, Thin target; *C*, cathode; *S*, chamber to reduce number of "reflected" cathode rays; *n*, *f*, *r*, *m*, *h*, spectrographs; *K*, glass window

positive potential, together with the thin foil E and the spectrographs n, f, r, m, h. G is of glass and is fastened to the brass with De Khotinsky; it supports and insulates the cathode C. The main part of the beam of cathode rays is included between the dotted lines. After being accelerated through the space between C and W they pass through the slit V, strike the thin foil E, and are finally stopped in the chamber S, designed to reduce the number of "reflected" cathode rays striking the foil. The spectrographs were arranged so as to analyze the X rays produced in E. The thin foil is inclined at the angle shown in Figure 1 to reduce absorption in the target of the X rays to be measured by spectrographs m, n.

The cover B was sealed to A with soft De Khotinsky and was easily removed by heating with a blowtorch. This permitted the renewal of thin foils, the insertion of spectrographs, the removal of the cathode for adjustment or renewal of filament (since W was

removable). A was a brass cylinder fastened to T with hard De Khotinsky. The poor conduction of heat from A to T permitted the ready removal and replacement of the cover without the necessity of supplying enough heat to warm the mass of metal T. To replace B, it was inverted over a blowtorch and heated to a temperature at which the bottom of the groove was easily wet with soft De Khotinsky, whereupon it was immediately placed on A. A very thin layer of the composition sufficed.

The glass tube H led to the evacuating system, consisting of an air-cooled mercury vapor pump and a Hyvac forepump. The

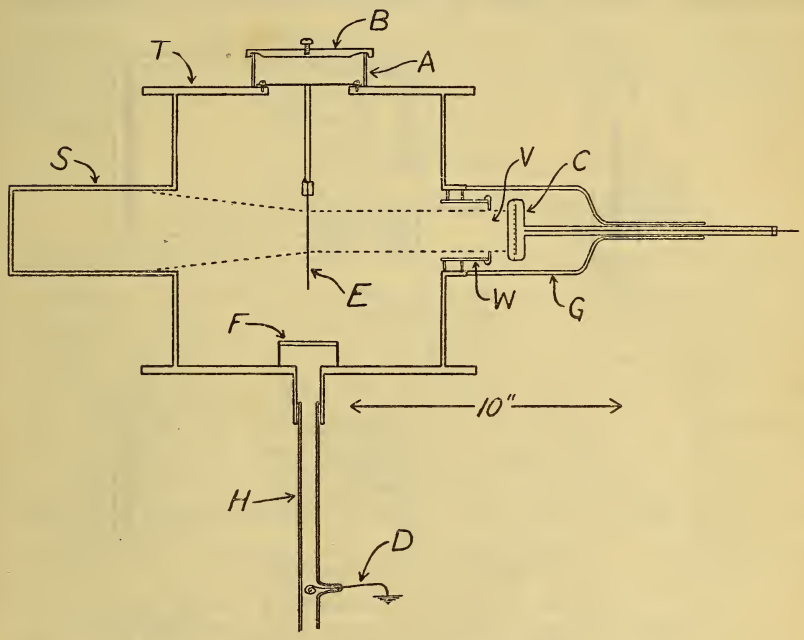

FIGURE 2.—*Vertical section of tube*

B, Removable cover, sealed with De Khotinsky; *D*, grounded wire to prevent discharges to forepump; *F*, small table to prevent discharges between *E* and *D*

grounded wire D was found necessary in case the potential was applied before a sufficiently high vacuum had been attained, to prevent a discharge through the mercury vapor pump to the forepump with possible damage to the motor commutator. Other discharges were found to occur between D and E, with damage to the foil, until the metal disk F was inserted. F also served to divert the air stream through H, which otherwise might have torn the foil when air was let into the apparatus.

The cathode C was designed and adjusted (filament behind a narrow slit) so that a focal spot on E was obtained which was about 4 mm wide and 3 cm long and of very approximately uniform intensity

distribution over this area. A pinhole photograph on plate P (pinhole at Y) served to indicate the dimensions and uniformity of the focal spot.

Protection from X rays is simple with this type of tube; the metal chamber was simply wrapped with sheet lead. The source of high potential used in the present work was patterned after the one at Stanford University (1), and the capacitances and inductances of the filter system were of the same order. The voltage was held steady by means of an electrostatic voltmeter which had been calibrated by spark gap, and the current (usually of the order of 0.1 milliampere) was measured by means of a shunted galvanometer.

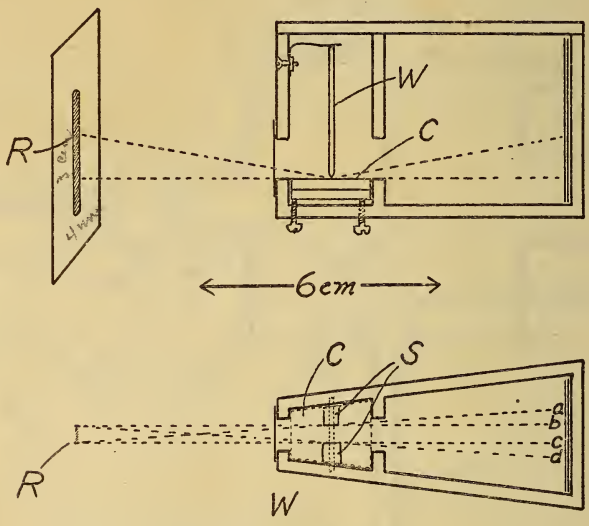

FIGURE 3.—*Spectrographs*

C, Crystal; *W*, lead wedge for Seeman slit; *R*, focal spot

Note that the design permitted an estimate, in the region outside *ad*, of the X rays due to stray cathode rays

2. SPECTROGRAPHS

The spectrographs (fig. 3) were of the Seeman type, a lead wedge W being pressed against two 0.06 mm pieces of lead S which rested on the face of the calcite crystal C. The ordinary features of design and necessary adjustments are obvious from the figure. It is evident that, if the focal spot R is of uniform intensity throughout its length and the thin target is of uniform thickness, the arrangement of Figure 3 is equivalent to one in which the crystal is rotated. But for the quantitative comparison of thin and thick target spectra mentioned above it is not necessary that the focal spot be of uniform intensity, if the intensity distribution does not change from experiment to experiment, which actually proved to be the case.

The length of the Seeman slit, governed by the distance between the lead pieces S, was 4 mm. Thus, from the geometry of the arrangement, it is seen that with the 4 mm focal spot used the part of the film bc would be blackened uniformly, since it is affected equally by radiation from all parts of the focal spot R. It is this part of the film that was photometered. Sections of film ab and cd will not receive uniform blackening, but the part of the film outside ad will be blackened uniformly by any X rays generated uniformly over the outer parts of the thin foil, as well as by X rays produced on the walls of the tube. Consequently, the spectral intensity outside the region ad is a measure of the energy in the various sources of undesired X rays mentioned in Section II above. The spectrograms showed that, under the conditions of the present experiments, these X rays were negligible compared with the X rays affecting the region bc.

IV. RESULTS

1. SHAPE OF THE HIGH-FREQUENCY LIMIT

Special experiments were performed for the purpose of ascertaining the form of the continuous spectrum near the high-frequency limit, a direct knowledge of which, for thin targets, is of prime importance. The chief difficulty here is the correction for various slit widths. It would be difficult to calculate directly the "effective" slit width due to the slits of the microphotometer, the slit of the spectrograph (which is effectively broadened by the penetration of the rays into the crystal), and the idiosyncrasies of the photographic film, but a satisfactory estimate of the net effect of all these factors can be made from either line shapes or absorption limit shapes. For this purpose it was convenient to use the K absorption limit of the silver of the film (λ_{AgK}, fig. 4).

The data shown in Figures 4, 5, and 6 were taken for $V=32$ kv and $\psi=90°$. The thin target was of 0.086 μ gold foil, and a thick target of gold was used for the comparison spectrum. In Figure 4 the ordinates of the upper curves are proportional to transmission, since they are direct microphotometer readings. The lower curves represent photographic density (logarithm of reciprocal of transmission); this quantity is directly proportional to X-ray intensity (12) for a given wave length and for the low densities used here, but the constant of proportionality varies with wave length. The high-frequency limit (λ_0) of the thin target continuous spectrum is seen to have a shape and width much like that of the absorption limit. This suggests that the former may consist of a finite discontinuity, just like the absorption limit does, and as was suggested by Webster (13) from his analysis of thick target data.

For purposes of comparison curve A is duplicated in Figure 5, and dotted curve C is a reproduction of the absorption limit shape, reversed and magnified vertically. Now, practically, the "effective slit width" due to the factors mentioned above will be the same here for the absorption limit as for the continuous spectrum limit; for since the wave lengths have been (purposely) chosen fairly near together the slit width of the spectrometer will not change much, and the densitometer slit width will not change at all. Thus, if the continuous spectrum limit were perfectly sharp, curves A and C

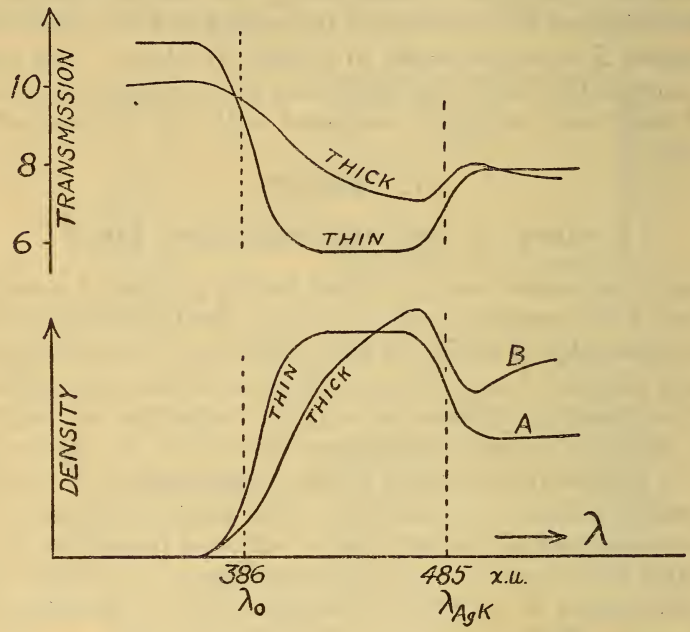

FIGURE 4.—*Comparison of thin and thick target spectra for gold at 32 kv and an angle (ψ) between cathode rays and measured X rays of 90°*

The two density curves are on different scales of ordinates
λ_0 high-frequency limit of continuous spectrum
λ_{AgK} absorption limit due to silver of photographic film

should coincide. However, this perfectly sharp discontinuity can only be anticipated for an infinitely thin target and for perfectly steady voltages; these conditions are impossible experimentally. The result of the finite thickness of foil is to cause finite losses of velocity of the cathode rays, so that in reality the atoms of the foil are bombarded by cathode rays with a range of speeds instead of a uniform speed. An analogous result is caused by an unsteadiness of voltage. Consequently, there is produced in the thin target not a spectrum with a definite high-frequency limit (λ_0), but rather a continuous succession of such spectra with different λ_0's. The result

is an apparent broadening of the limit, much as would have been caused by an increase of slit width.

It is desirable to calculate whether this broadening is of such an amount as to be accountable for by the known thickness of foil and the estimated variations of voltage, or whether the continuous spectrum limit is in reality not a sharp discontinuity. For this purpose the limit for the infinitely thin target will first be assumed perfectly sharp, as in *D*. (Fig. 5.) Further, assuming all but a negligible fraction of the cathode rays to be uniformly distributed through a definite range of voltages between V and $V-\Delta V$, it is obvious that the final shape of the limit will be closely approximated by substituting for the ordinate of C at λ an ordinate proportional to the area under the curve C between $\lambda-\Delta\lambda/2$ and $\lambda+\Delta\lambda/2$, where $\Delta\lambda$ corresponds to ΔV. The crosses of Figure 5 represent the result of this calculation for $\Delta V=1.9$ kv, superposed on curve A; for this value the calculated curve is in satisfactory agreement with the

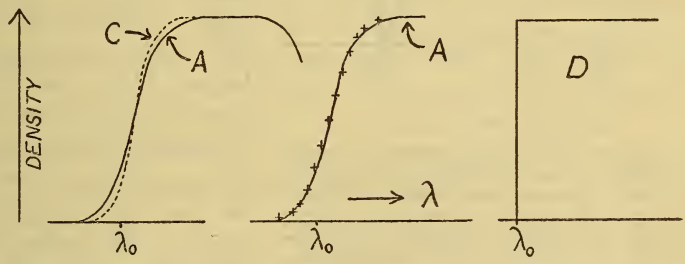

FIGURE 5.—*Corrections for slit width, in determining the structure of the high-frequency limit*

The ordinates here are photographic density, not X-ray energy

measured curve. 1.3 kv out of this 1.9 kv is due to the loss of speed of the cathode rays in penetrating the gold foil. The remaining 0.6 kv is very close to what would have been estimated as due to the variation of voltage (32.0 ± 0.3 kv) on account of the unsteadiness of the source of power. The position of λ_0 of the figures was selected on the supposition that the continuous spectrum limit of A was symmetrical about the wave length corresponding to $(32-1.3/2)$ kv.

It should, perhaps, be pointed out that the above method for calculating the shape of the limit involves the assumptions that the thin foil is of uniform thickness, that the cathode rays are not deflected appreciably in penetrating the foil, and that the variations in voltage are of a particular variety. However, serious departures from any of these conditions would have made themselves evident in the shape of the curve A; the only consistent irregularities in the curve seem to be accounted for rather by a halation effect. The gold foils used appeared quite uniform when viewed by transmitted light,

much more so than did beaten foils of silver or aluminum. Tests on the deflections of cathode rays in the foil indicated that most of the rays were deflected through angles less than 20°. These deflections contribute somewhat to the length of path in the foil, and consequently to the loss of speed of the cathode rays, but this error is in such a direction as to increase the probability that the end of the spectrum from an infinitely thin target would be in reality discontinuous.

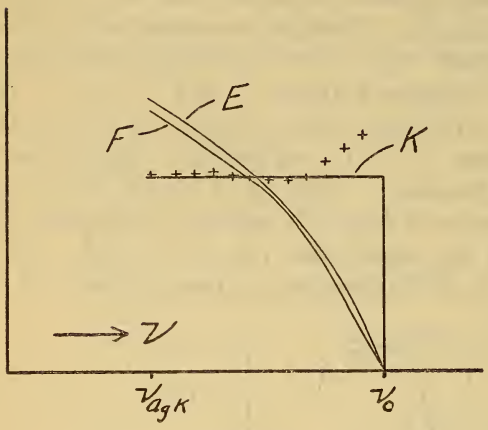

FIGURE 6

K, Thin target continuous spectrum according to Kramers's theory, confirmed by crosses, which are experimental observations. Note the discontinuity at the high-frequency limit
E, Thick target continuous spectrum, from an empirical formula. The thin target spectrum according to Wentzel's theory is somewhat similar to *E*, except for an infinite slope at ν_0

For a comparison of thin with thick target spectra the thick target spectrum of Figure 4 was corrected for slit width by an extension of the above method. The fully corrected density curve, transferred to a frequency scale, is shown in Figure 6(*F*). In this transfer the factor λ^2/c was omitted, since it is only a comparison of ordinates that is needed. For example, a similar transfer of curve *D* of Figure 5 results in the horizontal line *K* of Figure 6. The true thick target spectral distribution (*E*, fig. 6) was calculated from the formula (2, 14).

$$(I_{\psi\nu})_{\psi=90^\circ} = CZ\left[(\nu_0-\nu)+0.0027\,Z\nu_0\left(1-e^{-16\frac{\nu_0-\nu}{\nu}}\right)\right]$$

where *C* is a constant, *Z* is the atomic number of the material of the anticathode, and $(I_{\psi\nu})_{\psi=90^\circ}$ is the intensity on a frequency scale at frequency ν which is radiated in the direction $\psi=90^\circ$. Now, if *F* and *K* are both multiplied by such a factor (varying with frequency) that *F* is reduced to *E*, then *K* should be reduced to the true thin target energy distribution; the crosses indicate the result obtained in this manner. Absorption in the anticathode was negligible here.

Although the sharp increase of energy as ν approaches ν_0 may be anticipated on some grounds, the present work is not taken to confirm it, since the experimental uncertainties are especially large near ν_0, where the intensity of the thick target spectrum is low, and the empirical formula above is least certain.

The preceding experiments are regarded, however, as establishing the fact that the thin target spectrum has a finite discontinuity at

the high-frequency limit. Although the corrections have been carried out in detail only for X rays emitted perpendicular to the cathode stream ($\psi=90°$), some experimental evidence at hand for angles up to 50° on either side of the perpendicular ($40° \leq \psi \leq 140°$) gives no indication that there is a decrease of sharpness of the discontinuity for other angles.

2. CONTINUOUS SPECTRUM ENERGY DISTRIBUTION

In the experiments just described the tube voltage was chosen, for reasons mentioned above, so that the difference between ν_0 and ν_{AgK} was small. Now, since it is frequencies greater than ν_{AgK} that best affect the photographic film, the region of the spectrum that is most readily measured, and consequently measurements of which are most certain, is the region from ν_{AgK} to ν_0. Thus the calculations of intensity for the preceding experiments were carried out only over this narrow range. When it is desired to measure a greater range of spectrum, adequate intensities with relatively short exposures can be best obtained by raising the voltage on the tube, which increases this frequency range. Now, especially with a wide spectrum, this might be expected to also increase the uncertainty of estimating the amount of density at ν_{AgK} that is due to general fogging. However, the silver absorption discontinuity is here again useful. It had been noticed in the previous experiments, where ν_0 was very close to ν_{AgK} (and consequently when the general fogging at ν_{AgK} was comparatively certain), that the density above the fog on the low-frequency side of the limit was approximately half the density above the fog on the high-frequency side. This relation should hold generally, provided either that the photographic films were uniform or that their absorption for the rays near ν_{AgK} was low; the latter, at least, proved to be the case. In this connection it was desirable to choose ν_0 somewhat less than $2\nu_{AgK}$, so that the second order reflection would not complicate the estimation of the fog density. This density was, in general, within experimental error; that is, within about 10 per cent of the density on the high frequency side of ν_{AgK}.

In order to make satisfactory comparison of the energy distributions for different values of ψ, several of the small Seeman spectrographs were constructed as nearly identical as possible, the crystals being cut from the same large calcite crystal, and special care being taken about the slit widths. These spectrographs were then placed at various positions inside the tube, m, n, f, h, r (fig. 1), a thin foil inserted, and an exposure made. The spectrographs were then reloaded, and the experiment repeated with m and h, and f and n interchanged. The experiment was performed a third time with a thick target of copper. The purpose of the interchange of spectrographs is to make the comparisons of the different directions for thin targets inde-

pendent of differences in the spectrographs, by averaging. It is to be noted that these comparisons, but not comparisons of thin with thick target spectra, are independent of nonuniformities in the thickness of the foils, since the spectrographs were all adjusted to the same height within the tube. Confidence in the latter comparison was gained, however, by repetition of the experiment with different foils.

Unfortunately, the experimental uncertainties were greatly magnified by the fact that the photographic films presented a mottled appearance, the cause for which has not yet been ascertained. The effect varied with the type of film used; for example, a certain kind of X-ray film in which a white material is coated with the emulsion was entirely useless. The irregularities were not appreciable in the

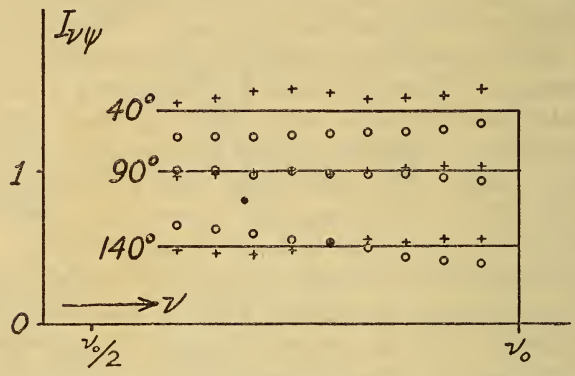

FIGURE 7.—*Thin target spectra in different directions*

The crosses are for gold targets, the circles for aluminum; the data for gold and for aluminum are on two different scales of intensities. The data for gold are more reliable. The experimental uncertainties are such as to make it questionable whether there is a variation with atomic number, as indicated

work described in the preceding section; this may have been due to the lower voltage used there or to greater intensities.

Continuous spectra from thin targets of gold and of aluminum, for $V=45$ kv, and various values of ψ, are shown in Figure 7. The thicknesses of the foils were 0.09 μ and 0.7 μ, respectively. The intensity scale for aluminum, data for which is represented by circles, is different from that for gold (crosses). The data for aluminum are less reliable on account of lower intensities; and data for $\psi=140°$ are less reliable for the same reason. The difference, for $\psi=40°$, between gold and aluminum is exaggerated by the fact that the two scales of intensity were chosen such as to make the ordinates for gold equal to those for aluminum for $\psi=90°$ rather than for some value of ψ between 40° and 90°. Accordingly, it is questionable, with the large experimental error, whether there is a variation with atomic number as indicated.

V. DISCUSSION

1. PASSAGE OF CATHODE RAYS THROUGH MATTER

Mention has been made of the uncertainties of applying the Thomson-Whiddington-Bohr law for cathode-ray penetration to the analysis of thick target spectra in terms of thin target spectra, on account of the Lenard "absorptions." There is no question, from the experiments of Whiddington (15), Terrill (16), Schonland (17), etc., that many of the cathode rays (those that are not deflected) obey this law in penetrating metal foils, but there is at hand no direct evidence about the cathode rays that have suffered deflections. Lenard (3) thought that these latter lost energy in large amounts by their contacts with atoms. It is certain, however, from experiments (18) with the cloud expansion chamber that in light gases, at least, practically all the cathode rays that have been deflected continue to approximately the same path length they would have attained had they not been deflected. (With the relatively few cathode rays that are observed to have suffered a large energy loss, this loss may be accounted for by the emission of an X ray.) The present experiments show that this is also the case with metals, and that radiationless stoppage of cathode rays, if existent at all, must be comparatively rare. The proof is that in the thin target spectra obtained here the energy in a given frequency range $d\nu$ is approximately independent of ν except at the high frequency limit, where there is a finite discontinuity, as Webster predicted (13) on the assumption that the Lenard process was nonexistent.

2. SYNTHESIS OF THICK TARGET SPECTRA

There is an important factor which has so far been neglected in the analysis of X rays from thick targets in terms of thin target spectra, namely, the deflections of the cathode rays in the target. A consideration of the effect of these deflections suggests a division of the X ray continuous spectrum into two parts—(A) a part due to cathode rays which have not been appreciably deflected and (B) a part due to the cathode rays which have become so much deflected as to approximate random directions. Strictly speaking, there is a third part due to cathode rays in the transition stage, but for present purposes this may be considered to consist, roughly, of two components, one of which is in class A and the other in class B. Considered as a class, the only cathode rays which have not been deflected are those which have also not yet lost much of their original speed;[8] thus part A of the

[8] In order that this statement may not appear to contradict the conclusion reached in the preceding section, it should be understood that the two processes considered here—that is, the small losses of speed, and the gradual deflections (diffusion)—may be considered as independent processes (5). But the net loss of speed and the net deflection of a cathode ray both increase with the number of atoms traversed, and this is what makes valid the statement made here.

spectrum has some of the characteristics of a thin target spectrum and should vary with direction (ψ) in the same way. On the other hand, part B of the spectrum should, by definition, not depend on ψ; it is due to cathode rays of relatively low speed.

In a previous paper (2) the author predicted that the X-ray continuous spectrum from a thin target should not show a horizontal distribution for values of ψ much different from 90°; this is not verified in the present experiments nor in some experiments by Duane (10) with his targets of mercury vapor. The predictions were based on an analysis of some data on X-ray isochromats, using the assumptions that the Thomson-Whiddington-Bohr law applied, and that the formula for unresolved intensity ($I_{\psi=90°}=\kappa ZV^2$, where κ is a constant) varied with ψ in a manner suggested by a theoretical relation given by Sommerfeld (19). Since the first assumption is now known to be valid, the disagreement indicates that the second assumption, dealing with unresolved intensity, was not correct. Specifically, the fact that the observed thin target spectra are all approximately of the same form suggests that the unresolved intensity from a thick target does not vary markedly with ψ, or, in other words, that part B of the spectrum predominates.

A revision of the previous analysis on this basis leads to thick target spectrum distributions represented by the formula

$$J_{\psi\nu}d\psi d\nu = CZ[(\nu_0-\nu)+x]\sin\psi d\psi d\nu$$

where $J_{\psi\nu}d\psi d\nu$ is the energy between ν and $\nu+d\nu$ that is radiated in direction ψ within angular range $d\psi$, C is a constant, and x is a relatively unimportant term which probably varies with ψ, ν, V, and Z. The variation of x with ψ is similar to the corresponding variation of the thin target spectrum. This formula leads, by integration, to an expression for unresolved energy, of the form

$$J_\psi d\psi = KZ(V^2+p)\sin\psi d\psi$$

where $J_\psi=\int_0^{\nu_0}J_{\psi\nu}d\nu$, K is a constant, and p is a relatively unimportant term similar to the x term above. It should be pointed out that, due to effects previously described (2), the absolute values of these terms x and p are not known, but their variation with ψ is established (2). They represent energy from part A of the spectrum.

For many purposes it is convenient to use the above formulæ in the form

$$I_{\psi\nu}d\nu = CZ[(\nu_0-\nu)+x]d\nu$$

and

$$I_\psi = KZ(V^2+p)$$

where I is here a symbol for X-ray intensity (energy per unit solid angle); the subscripts mean the same as before. A graphical repre-

sentation of the spectral distributions for different values of ψ, obtained by the revision of the author's previous work, with a copper target, is shown qualitatively in Figure 8.

A simple way to view the spectral distributions is outlined in Figure 9, where the thick target spectrum is built up of successive thin target spectra (neglecting absorption in the anticathode). The thin targets are here chosen not of equal thickness, but of such thicknesses as to cause the cathode beam to lose energy in equal steps. It has been mentioned above that A is essentially a thin target spectrum, and it is readily seen that a variation of A with ψ after the

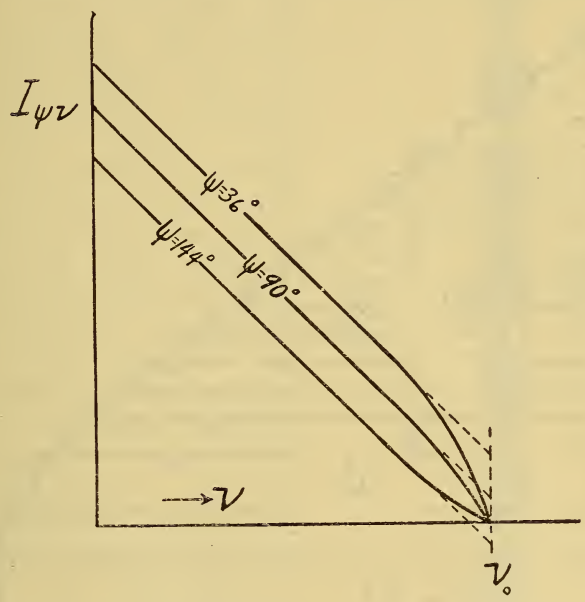

FIGURE 8.—*General character of the variation with direction of continuous spectra from thick targets, as shown by the present experiments with thin targets*

manner of Figure 7 will cause a variation with ψ of the thick target spectrum in the manner shown in Figure 8. It is interesting to notice that, even with thin target X rays the "hardness" of which does not vary with direction, thick target rays are obtained which are harder in the forward direction.

3. MECHANISM OF RADIATION

The theories of Kramers (20) and Wentzel (21) for continuous spectrum energy distribution from thin targets consider not $I_{\psi\nu}$ but only I_ν (that is $I_{\psi\nu}$ averaged over all values of ψ). The indication is that, since the present graphs of $I_{\psi\nu}$ are all approximately horizontal for a fairly wide range of ψ, and especially over the range that counts

most in the summation over ψ, it is reasonable to suppose that I_ν is also approximately horizontal. This is in agreement with Kramers's theory but not with Wentzel's. Graphs of the predictions made by these theories are indicated in Figure 6. This same result was anticipated in some previous work by the author (2) and its bearing on the form of the "correspondence principle" discussed; accordingly it will not be elaborated on here.

The variation of intensity with ψ has usually been accounted for on the basis of a formula first derived by Sommerfeld (19) from classical electrodynamics, in which the variation is associated with the

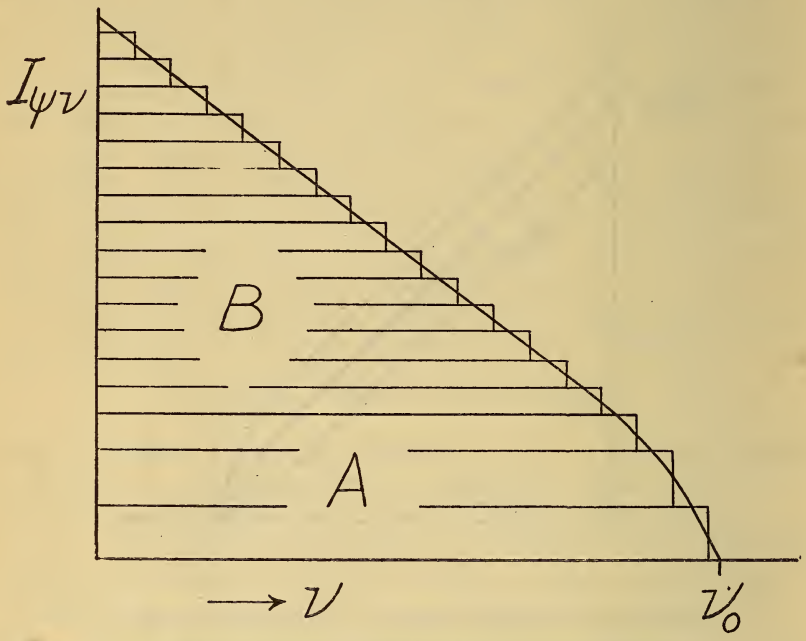

FIGURE 9.—*Synthesis of a thick target spectrum from successive thin target spectra*

rapid motion of the radiating cathode ray. Accepting this explanation, the type of variation with ψ shown in Figure 7 may be taken to indicate that the oscillating mechanism responsible for the X rays was in rapid motion at the instant of radiation. On the other hand, the fact that the high-frequency limit of the spectrum (ν_0) shows no measurable Doppler shift indicates just as emphatically that this mechanism was not in motion at the instant it was radiating. This discrepancy has long been known and appreciated (22); the present work merely makes possible a closer analysis of the anomaly.

The difficulty with the Doppler shift of frequency is provided for, formally at least, by the quantum theory, in which it is understood that the frequency of the end of the spectrum is determined only

by the energy of the cathode ray, and thus is independent of the direction of emission, except for an extremely small shift predicted from conservation of energy and momentum. The dependence of intensity on ψ is provided for by the "correspondence principle"; here the probability of emission of a quantum in a given direction may be expected to vary with direction in the same way as the classical spectrum, thus accounting, qualitatively at least, for the observed facts.

Now, it is very interesting that the above anomaly could also be explained in a classical way, if the cathode-ray structure illustrated schematically in Figure 10 were assumed. Here the cathode particle is supposed to have comparatively great extension along its line of motion, and its charge density is supposed to vary sinusoidally along its length; that is, it is supposed to consist of alternate negative and positive charges. (Considerations of stability, net charge, changes of potential energy by change in the charge distribution, etc., need not concern us at present, since the conception of this kind of cathode ray is advanced only for purposes of illustration; it may be pointed out, however, that by a slight modification of the continuous spectrum in a manner which would not be detected experimentally this cathode particle could be made to have a finite extension and a net negative charge.) Now if each portion of this cathode particle is suddenly stopped as it reaches a fixed point P, the radiation emitted will consist of a series of pulses and will have a single frequency (that is, no harmonics, since sinusoidal). Each pulse will have an intensity varying with direction in some manner such as described by Sommerfeld's theory; consequently the total radiated intensity will vary with direction in the same manner. The Doppler shift will be absent, since P is at rest. The

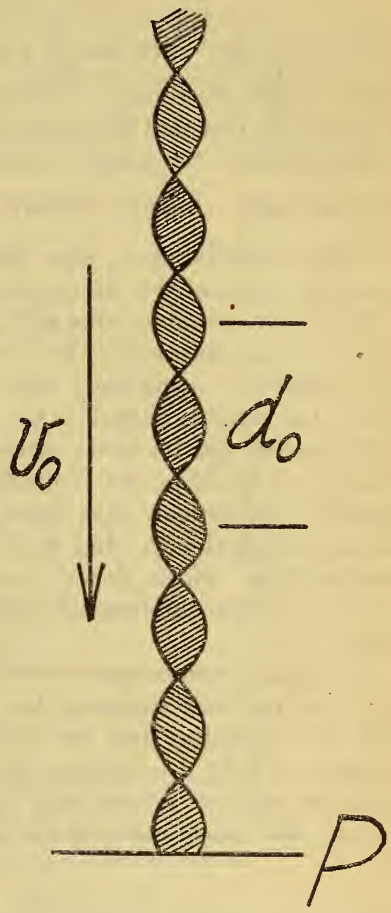

FIGURE 10.—*Schematic illustration of a "wave electron" which would explain in a classical way one of the long-standing anomalies of X-ray continuous spectra*

emitted frequency will be $\nu_0=\frac{v_0}{d_0}$. In order that the quantum condition $\nu_0=\frac{V_e}{h}$ hold, d_0 must be

$$\frac{v_0}{\nu_0}=\frac{hv_0}{h\nu_0}=\frac{hv_0}{\frac{1}{2}mv_0^2}=2\frac{h}{mv_0}$$

Thus, $d_0=2\lambda$, where $\lambda=\frac{h}{mv_0}$, the wave length of the De Broglie waves. This discrepancy would be interpreted in wave mechanics as due to the fact that the cathode particle velocity v_0 (group velocity) is different from the (phase) velocity (u_0) of the individual concentrations of charge. Indeed, on Schrödinger's theory, $u_0=\frac{E}{\sqrt{2m(E-U)}}=\frac{v_0}{2}$ for this particular case, since the potential energy (U) is assumed zero; this removes the discrepancy between d_0 and λ.

The above considerations apply only to the high-frequency limit of the continuous spectrum. By what process are frequencies lower than this radiated? Apparently the Schrödinger interpretation will be that if the cathode particle is not completely stopped by the obstacle at P, but only has its speed reduced from β_0 to β or its energy reduced from $h\nu_0$ to $h\nu$, then the frequency radiated is $\nu_r=\nu_0-\nu$. The final speeds of the cathode rays (speeds after the radiation process) then become identical with what would be expected on the older quantum viewpoint, in which it was assumed that the energy radiated is $h\nu=E_0-E$, the difference in energy between the initial and final states.

Let us now examine more closely the question of the dependence on ψ of the radiated intensity for the above conditions. Supposing, first, for simplicity, that the cathode ray moving with the fractional velocity of light β is reduced in speed by a very small amount $d\beta$ due to a negative acceleration (a) acting simply in the direction of motion, the energy radiated per unit solid angle will be (19)

$$dI_{\psi\nu}=K\sin^2\psi\frac{ad\beta}{(1-\beta\cos\psi)^5}$$

where K is a constant independent of ψ, β, and a. The asymmetry (associated with unequal intensities for supplementary values of ψ) is seen to increase rapidly with increasing β; thus for a finite change in β, the space distribution is given by

$$I_{\psi\nu}=K\sin^2\psi\int_{\beta}^{\beta_0}\frac{ad\beta}{(1-\beta\cos\psi)^5}$$

In general, a may be expected to be some function $a(\beta)$, since the cathode ray in its hyperbolic path about the nucleus will have an

acceleration which varies along this path. However, no reasonable choice of function $a(\beta)$ seems to lead in a satisfactory way to the simple experimental result (fig. 7) that the ratio of intensities for two given values of ψ is roughly independent of the frequency. Figure 11 illustrates some attempts to obtain agreement from the above formula—the dash-dot curve results from assuming (as Sommerfeld did) $a(\beta)$ constant, with β in the same direction as β_0; the dash curve is the same, except that β is opposite to β_0; the dotted curve assumes $a(\beta)$ such as to give a minimum ratio of intensities, for

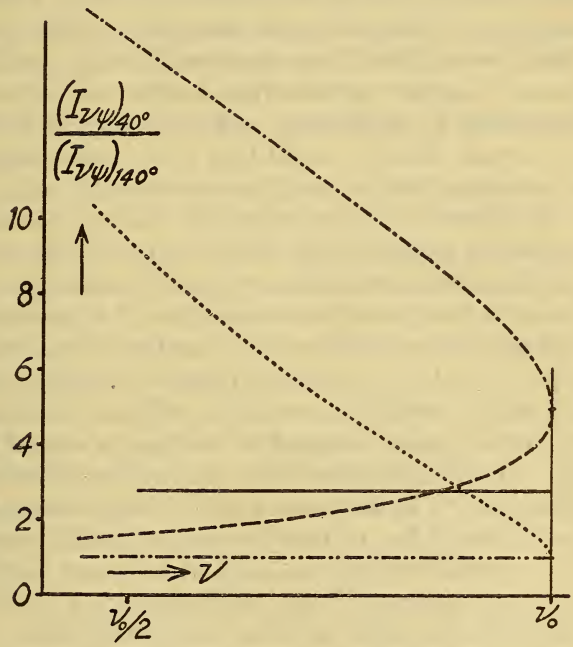

FIGURE 11.—*Ratio of intensities in different directions*

Full line, experimental observations. Broken lines, various attempts to account for the experimental observations on the assumption that continuous spectrum frequencies are radiated in spherical waves as single quanta

β in the same direction as β_0; the dash-dot-dot line is the same except that β and β_0 are in opposite directions. The unbroken line approximates the experimental results. It should be emphasized that the broken curves of Figure 11 are not particularly the ones to be compared with the experimental results; these curves merely represent limiting cases that were easy to calculate but which would give the clue as to the correct assumption to be made regarding $a(\beta)$. After careful consideration of various possibilities it was concluded that no choice of $a(\beta)$ could be made which would not be unsatisfactorily arbitrary and which would correspond with other known facts;

this includes the case in which $a(\beta)$ is, for part of the time at least, a positive acceleration in the direction of motion.

There remain several possibilities for explaining the above discrepancies. One is that the cathode particle will be deflected in its approach to the nucleus; these deflections will, in general, decrease the calculated ratios of Figure 11. But it is to be noted that to give correct experimental values these ratios would, in the more satisfactory cases represented in Figure 11, have to be decreased more in the low-frequency region than at high frequencies; this would indicate that the cathode rays which lose only a small fraction of their energy are deflected more than those which lose all their energy. But it would have been supposed that the smaller amounts of energy came from the cathode rays which were not so much deflected (accelerated) by the nucleus, and the Fourier analysis of orbits, used in the current theories, would lead to the same supposition.

Another consideration is that the acceleration will, in general, not be in the direction of motion of the cathode particle but will have a component perpendicular to this motion; the intensity distribution in this case is indeed such as to greatly reduce the asymmetry. It would seem to be a peculiar combination of circumstances which would permit the two sets of intensities (one from the parallel acceleration, the other from the perpendicular one) to so nicely balance, but a proof that this alternative is untenable will not be attempted here.

There is another general method for securing a spatial distribution of intensity. If it be imagined that for each continuous spectrum frequency there exists in the atom a pair of oscillators which radiate this frequency, then, due to interference, a spatial intensity distribution may be produced; this intensity distribution may be made to approximate that observed if the oscillators are a certain distance apart and have certain phase relations and polarizations. The oscillators would need to be in the atom rather than in the cathode ray to avoid Doppler effect. The difficulties with such a picture are, however, so great (for example, on account of the necessity of associating with an atom a continuous range of emitting oscillators instead of the discrete ones indicated by the emission spectrum of the atom, and the wide range of spacings and phases which would have to be postulated) that this possibility is given no weight in the present discussion.

Summarizing, it is believed to have been shown, with a fair degree of satisfaction, that either (1) the continuous radiation from thin targets is in large part composed of radiation due to acceleration of the cathode rays in a direction perpendicular to their line of motion (this is not necessarily opposed to a complete polarization at any one frequency; for example, the high-frequency limit, such as is indicated by the experiments of Ross (23)); (2) a cathode ray in interacting with

a nucleus to lose an amount of energy $h\nu$ does not radiate only the monochromatic frequency ν; or (3) the spatial intensity distribution is not such as to be accounted for by a relativity transformation, just as though radiation is not electromagnetic waves, but perhaps of the "photon" nature suggested by the experiments of Compton and Simon (24).

However, if the spectral distributions are really the same in all directions, as suggested by Figure 7, it is reasonable to seek a simple hypothesis to match this simple result. Such a hypothesis (strictly classical) might be that the accelerated cathode ray radiates the whole spectrum simultaneously; this would be associated with the existence in the moving cathode ray of either a continuous range of phase velocities (u) with u_0 as the upper limit, or (assuming $u=v_0$) a continuous range of d's (fig. 10) with d_0 as the lower limit, or a combination of these.

On account of the experimental uncertainties described above in connection with Figure 7, however, these experiments must be regarded somewhat in the nature of preliminary work; and a more detailed constructive discussion will be delayed until more accurate measurements are obtained to guide the speculation. The work is being continued by more refined methods and is being extended to other fields of X-ray emission.

These experiments were carried out while the author was a National Research Fellow at Cornell University. It gives me great pleasure to acknowledge indebtedness to Prof. F. K. Richtmyer for some of the basic ideas contributing to the success of the above work. I wish to thank Dr. W. D. Coolidge, of the General Electric Co., for some of the apparatus used in the preliminary experiments.

4. STRUCTURE OF THE MOVING ELECTRON[9]

The beautiful piece of work on X rays from thin targets, just published by Kulenkampff (25), leads me to an extension of the above ideas. Kulenkampff obtained the spatial intensity distribution, from $\psi=22°$ to $150°$, for several different frequencies in the continuous spectrum; these curves all appear to extrapolate to zero, or at least to comparatively small values of intensity, for the extreme angles 0° and 180°. This means that the component of the radiation emitted by the cathode ray due to its acceleration perpendicular to the original line of motion is comparatively small. Thus only two of the three possibilities mentioned above remain; that is, if X rays are electromagnetic waves, a cathode ray which has lost energy $h\nu$ will not, in general, have radiated frequency ν. Accordingly, it becomes desirable to examine in more detail the above postulate that the accelerated cathode ray radiates all frequencies simultaneously.

[9] This section was added Jan. 11, 1929.

As pointed out above, using the conceptions suggested by Figure 10, the radiation of a continuous band of frequencies with ν_0 as the upper limit might be accounted for by supposing either a continuous range of u's or a continuous range of d's; the latter seems to form the better basis for a physical picture. The explanation of continuous spectrum phenomena is thus relegated to the structure of the moving electron; we must next find the structure which would account for the observed results.

Let us first investigate what sort of electromagnetic "pulse" would account for the observed spectral distributions. The converse problem; that is, the analysis of a pulse into its Fourier components (Fourier integral, not series) is well known; in X rays it is familiar

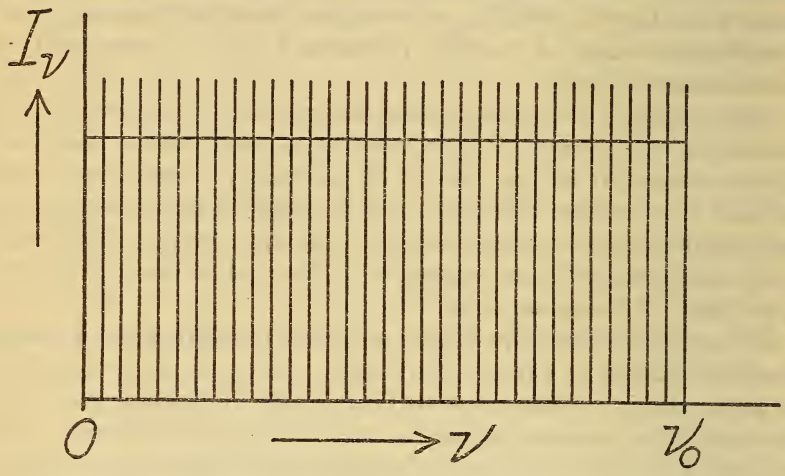

FIGURE 12.—*Manner in which a continuous spectrum may be approximated with a line spectrum*

especially from the attempts to account, on the basis of the old pulse theory, for the existence of a high-frequency limit in the X-ray continuous spectrum (26). In general, according to these attempts, a finite pulse must be thought of as composed of all frequencies between zero and infinity; and it would require a pulse with oscillations extending to infinity to account for an infinitely sharp high-frequency limit. The direct attack on the problem has been made by Kennard (27), who investigated the form of pulse that would account for an X-ray spectrum similar to the customary thick target spectrum, which has a discontinuity of slope at the high-frequency limit. For present purposes we must, of course, use the observed (fig. 7) thin target spectral distribution, which has a finite discontinuity in $I_{\psi\nu}$ at the limit. Let us first approximate this continuous spectrum with a line spectrum in which the lines are so close together as not to be distinguishable from a continuous spectrum; if the lines are all of the same intensity and equally spaced on a frequency scale the "continuous spectrum" (compare fig. 12) will have the required horizontal

distribution. (It should be remembered that the thin target experiments have, so far, covered only the range $\nu_0/2$ to ν_0; however, there is no reason to believe, from the thick target work, that the extrapolation to zero frequency is essentially different from the one assumed here.) The frequencies of these lines are

$$\frac{\nu_0}{n}, \frac{2\nu_0}{n}, \frac{3\nu_0}{n}, \ldots \frac{k\nu_0}{n} \ldots \frac{n\nu_0}{n} (=\nu_0) \ldots (k=1, 2, 3 \ldots n)$$

and the wave lengths are

$$\frac{n\lambda_0}{k} \ldots (k=1, 2, 3 \ldots n)$$

where λ_0 corresponds to ν_0. The form of electromagnetic pulse (magnitude of electric vector as a function of distance along the radius vector r at a definite instant) is

$$\sum_{k=1}^{k=n} f(k) \cos\left(\frac{2\pi kr}{n\lambda_0} - p_k\right)$$

where p_k is a phase term and $f(k)$ is a factor connecting amplitude with intensity; this latter for wave trains sufficiently long will depend on their amplitude and not on their frequency, hence may be considered constant and for the present case where the lines are to be of equal intensity may be assumed unity. Placing the terms p_k each equal to zero, so as to make the pulse symmetrical, we have

$$\sum_{k=1}^{k=n} \cos \frac{2\pi kr}{n\lambda_0}$$

for the form of the pulse. Now, as n approaches infinity (that is, as our line spectrum approaches a truly continuous spectrum) the form of pulse is given by an integral

$$\int_{\frac{k}{n}=0}^{\frac{k}{n}=1} \cos \frac{2\pi kr}{n\lambda_0} d\left(\frac{k}{n}\right) = \frac{\lambda_0}{2\pi r} \sin \frac{2\pi r}{\lambda_0}$$

Then, remembering that the magnitude of the electric vector is proportional to the amount of charge being accelerated, other things being equal (compare fig. 10), the charge density (charge per unit length) along an electron in uniform motion becomes proportional to

$$\frac{d_0}{2\pi x} \sin \frac{2\pi x}{d_0}$$

where x is distance measured along the line of motion, with $x=0$ at the center of the electron. A graph of this function is shown in Figure 13.

The derived electron structure thus consists of alternate positive and negative pulses of charge; the "wave length" (that is, approximately, the distance between negative crests) being everywhere d_0 except at the center of the electron. The predominance of this spacing may be of importance in the explanation of effects similar to those recently investigated by Davisson and Germer. It is to be noted that the net charge on this electron (represented by the difference between area under the curve above the axis and that below) can be shown to be a finite determinate quantity. (A factor to keep this net charge constant, independent of speed, was neglected in the above formula.) The stability of this type of electron will not be considered here; it probably will be no more difficult to account for than it is to account for the stability of an electron consisting entirely of negative charge. An obvious difficulty still attaches to this electron, however, in that it extends to infinity in both directions; this infinite extension is associated with a continuous spectrum which has only

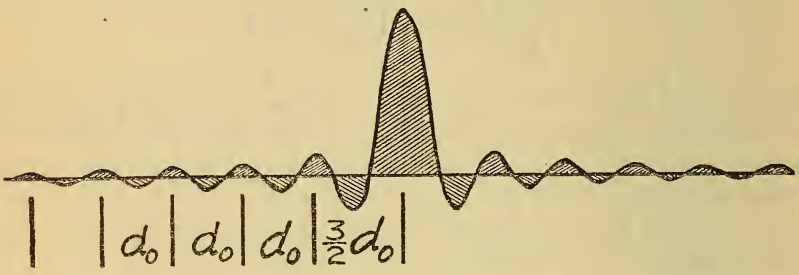

FIGURE 13.—*Charge density along a moving electron which would give in a classical manner the observed continuous spectra*

Negative charge above the axis, positive below

the frequencies specified in the above integral, with a perfectly sharp discontinuity at the limit. But experimentally, we can never make a perfect test of these conditions; it may well be that the limit is in reality spread out over a finite range of frequencies which is so small as not yet to have been detected by experiment, and that even at frequencies higher than the quantum limit there exists an amount of energy too small to have been noticed in experimental work to date. Thus the experiments can only indicate that, at a velocity corresponding to 40 kv, say, the electron is of the order of 15 Ångstroms long, as a minimum. In this connection it should be pointed out that, since the experimental and theoretical work (1, 2, 20) indicates that the thin target X-ray continuous spectrum intensity distribution is approximately horizontal on a frequency scale for all voltages, this would mean that the structure of the electron is essentially similar at all voltages. However, if this is strictly true, the electron in free space should expand greatly at very low velocities. On the other hand, if the length of the electron is to be kept within reasonable

limits by not allowing this expansion, the sharpness of the high-frequency limit must diffuse correspondingly; that is, we may expect for low velocities to observe a "structure" in this limit which would not be discovered at high velocities. That this structure has not yet been observed may be due to the fact that continuous spectra have not yet been observed for low enough electron velocities. There may be some experimental support for this viewpoint, however, in the work of E. O. Lawrence (28), who observed a fine structure in the curve representing the probability of formation of positive ions in mercury vapor as a function of electron speed for speeds near that required to produce ionization. This implies the assumption that it is frequencies contained in the moving electron which stimulate ionization.

Now, assuming this structure for the cathode ray, all known facts about X-ray continuous spectra appear to be accounted for qualitatively and in a classical manner. First of all, the anomalies of the present paper, of course, disappear, since it is on this work that the cathode particle structure is based. The dependence of spectral distribution on voltage has been discussed above in connection with this type of electron. It may be pointed out also that the space distribution of energy as a function of voltage which would be expected on the present theory is qualitatively in agreement with the thin target results of Kulenkampff (25), who found that the spatial asymmetry increased with increasing voltage for the high-frequency limit. Further, although the question has not been examined in detail, the total energy in the X-ray continuous spectrum seems to come out of the right order of magnitude, the inclusion of positive charge in the electron's structure being roughly couterbalanced by the greater length over which the charge is distributed. For example, this would not be the case if the electron's charge were distributed over a series of pulses which were entirely negative, since radiated energy is proportional to e^2 for a point charge, other things being equal.

Now, Kulenkampff found the most interesting fact that the spectral distribution is only to a first approximation independent of direction (ψ). Another way of saying the same thing is that the spatial intensity distribution is somewhat different for different frequencies in the spectrum. It is most important that this kind of variation is accounted for on the present theory, assuming that the acceleration of the cathode particle is due to its close approach to a nucleus; that is, that its acceleration is such as to be accounted for by its motion along a hyperbolic orbit. First of all, let us suppose, for simplicity, that the mass per unit length of the cathode ray is so adjusted that each part of the electron traverses the orbit in the same manner; the picture resembles that of pulling a light extensible cord through water.

(We neglect here the shearing forces between negative and positive "charge pulses" which would tend to disrupt the electron entirely; its resistance to this disruption must be connected with its internal structure which will not be examined here.) Now, if the acceleration were of extremely short duration, very short compared with $1/\nu_0$, the structure of the moving electron would be revealed exactly in the radiated spectrum, which would then have the same spectral distribution in all directions. But in the hyperbolic orbit this time of acceleration is, in general, appreciable; specifically, it is appreciable relative to $1/\nu_0$, but not so much so for $1/\nu_a$, where ν_a is a very low frequency compared with ν_0. The effect is to suppress the energy of frequency ν_0, but not that of frequency ν_a, in the radiated spec-

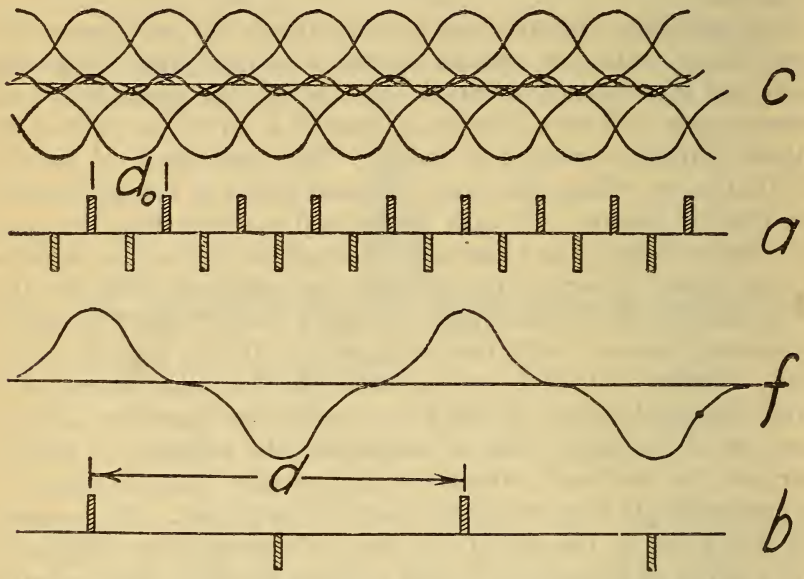

FIGURE 14.—*Way in which acceleration in a hyperbolic orbit may tend to suppress the higher frequencies*

trum. The manner in which this comes about is illustrated in Figure 14, where, for simplicity, two component "waves" of the cathode ray are represented not as sinusoidal, but as extremely short rectangular pulses separated by long intervals in which there is no charge. The form of each component curve of (*c*) and (*f*) represents, for a simple case, the electromagnetic pulse radiated by each small pulse of charge in traversing the hyperbolic orbit. It is readily seen that the effect is to suppress the oscillations, and consequently the energy, for the shorter *d*'s; it would not essentially change this conclusion if for (*a*) and (*b*) were substituted the actual sinusoidal curves. Thus, for hyperbolic orbits in which the cathode ray does not approach very close to the nucleus, the time of acceleration will be comparatively long, while for close approaches most of

the energy will be radiated in a shorter time; the radiated spectrum, therefore, depends on the type of orbit. But due to different speeds and different deflections, the spatial distribution of total radiated intensity will also vary with type of orbit. Consequently, the distribution of intensity in the radiated spectrum will depend on direction ψ, as Kulenkampff observed.

A further result of these ideas is that, in general, the radiated spectral distributions may be expected to vary somewhat with both the voltage and the atomic number of the anticathode material as well as with ψ. This suggests that the indicated difference (fig. 7) between the spectra for gold and aluminum may be real, although it is believed that these experiments are not precise enough to be sure of the point.

The use of hyperbolic orbits suggests a further analysis of the point in connection with the part of the radiation due to acceleration perpendicular to the initial direction of the cathode ray. It was sufficient for the argument given above that for $\psi=40°$ and $140°$ the energy in this component (N) of the radiation should not be large compared with the energy in the component (M) due to acceleration along the original line of motion. But if the cathode ray is to describe a hyperbolic orbit, as here assumed, the component N should, in general, not be zero for any frequency, and Kulenkampff's curves [say $F(\psi, \nu, V)$] should, therefore, not extrapolate to zero for $\psi=0°$ and $180°$. Now, if the radiation were really all of the type M, it would mean that F would, on the present theory, be given by an integral, as above:

$$\frac{F(\psi, \nu, V)}{\sin^2 \psi} = k \int_{\beta_t}^{\beta_0} a(\beta)\ (1-\beta \cos \psi)^{-5}\, d\beta$$

taken over the range of variation of β. Considered as a function of ψ, the integral on the right must, regardless of the form of $a(\beta)$, continually decrease as ψ varies from 0 to π; thus the quantity on the left must do likewise. I have divided by $\sin^2 \psi$ Kulenkampff's F for different values of ν and V and plotted the results in Figures 15 and 16. The fact that none of these curves decreases continuously from $\psi=0$ to $\psi=\pi$ indicates that in all of them there is an appreciable component N. Thus the continuous spectrum will be expected to be incompletely polarized throughout the range here considered; this is satisfactory from the standpoint of the present theory of hyperbolic orbits.

It should be pointed out that the high-frequency limit of the spectrum does not change for the various hyperbolic orbits even though the speed of the cathode particle along the orbit is in general, greater than v_0. This means that the emitted frequencies depend only on the energy of the cathode ray before it encounters the atomic field. This circumstance is also easily understood on the present

conceptions: As the front end of the cathode particle penetrates the field of the nucleus it is accelerated so that an elongation of this end of the particle occurs, but on strictly mechanical ideas, the distance between crests in the moving electron will be proportional to the velocity at every point; thus the frequency radiated, being $\frac{v}{d}$, will be unmodified. It is to be remarked that the relation $d_0 = \frac{2h}{mv}$ does not hold along the entire orbit. Another viewpoint that leads to the same result as above is that, since the cathode particle is very long compared with the diameter of the space strongly influenced by the field of the atom, only a small part of the cathode particle, that which

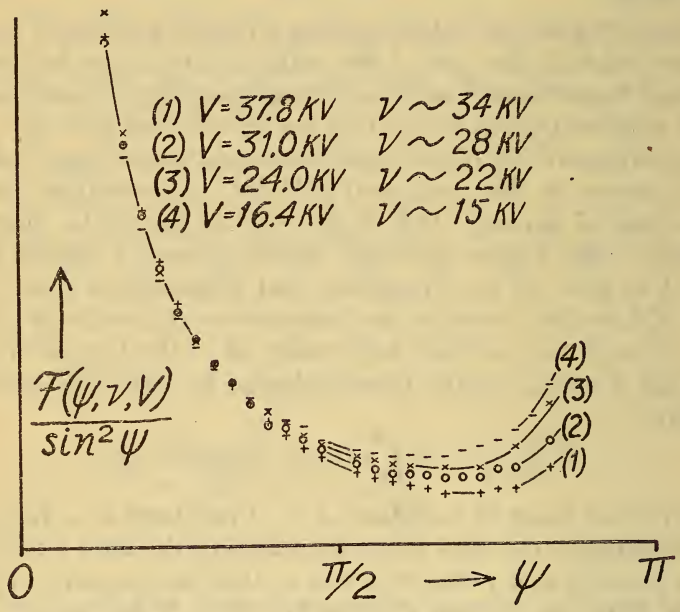

FIGURE 15.—*Calculations from Kulenkampff's data which indicate that the thin target X-ray continuous spectrum is incompletely polarized throughout the range yet observed*

is in the vicinity of the nucleus, will have its velocity changed. The frequency at which the pulses of charge are fed into the strong field, however, is determined by the condition of the part of the cathode particle which is as yet uninfluenced by the field of the atom, and this is the frequency which is radiated. In the electrostatic field between anode and cathode, the cathode particle, being in its entirety at a comparatively uniform potential, will adjust its length to its velocity. This recalls the concept used by Schrödinger that ordinary mechanics breaks down for systems of atomic dimensions.

Let us now imagine this electron in a repeating orbit, say, a circular one. On account of its great length, the electron may be supposed,

in general, to be curled many times around the orbit, something like a coil of rope. Very roughly speaking, it may be supposed that, independent of what forces bind the separate coils together, the positive charge of one turn will tend to superpose on the negative charge of the preceding turn; if, then, the circumference of the orbit ($2\pi r$) is a multiple (n) of $d_0\left(=\frac{2h}{mv}\right)$, we have $mvr=\frac{nh}{\pi}$, in which the angular momentum is quantized ("stationary states"). Further, it is seen, roughly, that there is a tendency to nullify variations in charge density around the orbit; when these variations disappear no varying

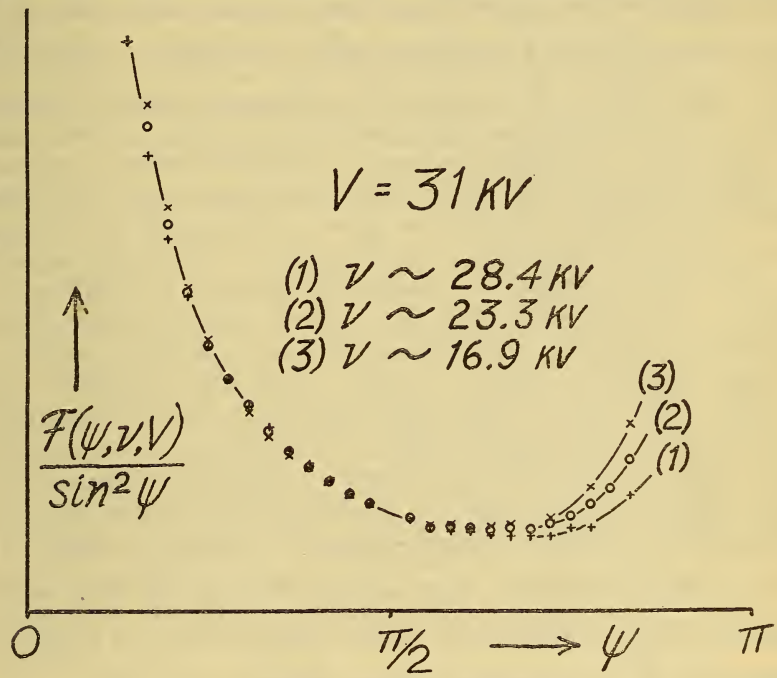

FIGURE 16.—*Calculations similar to Figure 15*

fields will be set up due to the orbital motion, and the particular stationary state will be radiationless—that is, the "normal state." A more accurate use of the ideas previously stated may be obtained, however, by returning directly to the original conception of the moving electron as containing a continuous range of d's with d_0 as a minimum. For example, if $2\pi r=d_0$ it is obvious from this viewpoint that of all component d's only d_0 can superpose constructively (that is, negative crest of one turn superposing on negative crest of preceding turn). More generally, if $2\pi r\geq d_0$, it will be found that reinforcement always occurs for one or more values of d (corresponding to one or more negative crests in the circumference), and if $2\pi r<d_0$ reinforcement never occurs.

Thus, the only condition in which the orbit is radiationless is when $2\pi r < d_0$. Strictly speaking, however, a small amount of radiation (and absorption) should occur even in this condition, due to the finite length of the electron. For, as has been pointed out above, if the electron is to be of finite length, in general, some energy at frequencies higher than corresponds to d_0 must be present. Just what these frequencies are and what prominence they have is, of course, a matter to be decided by experiment. Now, if the electron were to absorb just as much energy as it radiated, the orbit would remain of exactly the same radius. But, in general, this will not be true, and it may be supposed that there is a finite probability of the orbit having any of a continuous range of values of r with $r \doteqdot \frac{d_0}{2\pi}$ as an upper limit. For example, if the atom were out in interstellar space, where the radiation density would be very low, the orbit might be supposed to continually contract. During this process various of the high frequencies are brought into prominence when the circumference of the orbit is such as to allow reinforcement for their particular value of d (here $d < d_0$). Such a process may provide an origin for the "cosmic radiation" recently investigated by Millikan and others. It is interesting that the source in space predicted here is in agreement with the conclusions of Millikan and Cameron (29).

These qualitative ideas are, so far, a fairly direct extension of the concepts used above in connection with continuous spectrum radiation; but for a quantitative treatment of the electron in a periodic orbit, these concepts must apparently be modified in some manner. For example, suppose that the electron in its normal state in a hydrogen atom absorbs enough energy to expand the orbit so as to cause d_0 to reinforce. Remembering that $\frac{e^2}{r^2} = \frac{mv^2}{r}$ (the relation between force and acceleration in the circular orbit, and putting, as before, $d_0 = \frac{2h}{mv}$, $\nu = \frac{v}{d_0}$ and $2\pi r = d_0$, we obtain

$$\nu = \frac{R}{4}$$

where R is the Rydberg constant; this is different from the Lyman series limit (the K critical absorption discontinuity) by a factor of 4. Such a discrepancy is not surprising, however, as the conditions governing the cathode ray in free space are scarcely expected to be applicable at once to an electron curled many times around an orbit. Rather the aperiodic conditions must be regarded as a special case of more general laws yet to be formulated; no attempt will be made here to formulate these laws.

The above coincidence (except for the factor of 4) of the critical absorption frequency with the electron frequency corresponding to d_0 suggests a picture of the sometimes-postulated trigger action connected with the photoelectric effect: Assuming the orbital electron to have stored up internally the amount of energy necessary to enable it to get outside the field of the atom, the electromagnetic frequency which would disengage it would be that frequency which would displace one end of the electron, pulse by pulse, from its orbit; this is the frequency associated with d_0. An extension of this idea leads one to associate the continuous absorption on the high-frequency side of the limit with the continuous range of values of r possible in the normal state. (See above.) Now, recalling the ideas introduced above in connection with the finite extension of the cathode ray (where values of d shorter than d_0 were shown to be possible), if certain values for d in the range $d<d_0$ have more prominence than others, this picture of X-ray absorption leads to predictions of fine structure in absorption discontinuities (for d close to d_0) and to effects resembling Barkla's "J" phenomena (30) (for d quite different from d_0).

Finally, it may be pointed out that a conception may now be obtained as to the nature of the difference between the curves for excitation of an atom by X rays (probability of excitation a maximum at the limiting frequency and falling off rapidly as the incident frequency is increased) and excitation by cathode rays (probability increases from zero at the critical voltage to an approximately constant value at higher voltages) (31). For while the electromagnetic frequency would excite only particular atoms (those having particular values of r), the cathode ray, containing prominently a great range of frequencies (with that corresponding to d_0 as an upper limit, for the prominent ones) will be capable, in general, of exciting atoms with a range of r's, this range increasing as the velocity of the cathode ray increases.

Many difficulties must be overcome in the above theory (for example, with regard to the stability, in strong fields, of the proposed electron, and the storing up of energy in orbits) before the above descriptions can be regarded as actual pictures. Consequently, until these difficulties have been examined in more detail this section can claim to provide no more than a schematic picture of an electron, which seems to be adaptable to an explanation of many of the effects associated with the quantum theory.

VI. BIBLIOGRAPHY

1. Webster and Hennings, Phys. Rev., **21**, p. 312; 1923.
2. W. Nicholas, Phys. Rev., **29**, p. 619; 1927.
3. P. Lenard, Ann. der Physik, **80**, p. 1; 1926.
4. H. Kulenkampff, Ann. der Physik, **80**, p. 261; 1926.
5. W. Bothe, Handbuch der Physik, **24**, p. 1.
6. W. D. Coolidge, J. Frank. Inst., **199**, p. 628; 1925.
7. Physique des Rayons X, p. 45; Paris, 1921.
8. X Rays and Electrons, p. 256.
9. W. Duane, P. N. A. S., **13**, p. 662; 1927.
10. W. Duane, P. N. A. S., **14**, p. 450; 1928.
11. Bergen Davis, Phys. Rev., **11**, p. 433; 1918.
12. Glocker and Traub, Phys. Zeits., **22**, p. 345; 1921.
13. D. L. Webster, Phys. Rev., **9**, p. 220; 1917.
14. D. L. Webster, Radiology; April, 1924.
15. Whiddington, Proc. Roy. Soc., **86**, p. 360; 1912; **89**, p. 559; 1914.
16. H. M. Terrill, Phys. Rev., **22**, p. 101; 1923.
17. B. F. J. Schonland, Proc. Roy. Soc., **104**, p. 235; 1923; **108**, p. 187; 1925.
18. C. T. R. Wilson, Proc. Roy. Soc., **104**, p. 192; 1923.
19. See Atombau and Spektrallinien, 4th ed., p. 37, or X Rays and Electrons, p. 44.
20. H. A. Kramers, Phil. Mag., **46**, p. 869; 1923.
21. G. Wentzel, Z. f. Phys., **27**, p. 257; 1924.
22. See D. L. Webster, N. R. C. Bulletin, **1**, p. 427; 1920, and A. H. Compton, "X Rays and Electrons," Chapter II.
23. P. A. Ross, J. Opt. Soc. Am. and Rev. Sci. Int **16**, p. 375; 1928.
24. A. H. Compton and A. W. Simon, Phys, Rev., **26**, p. 289; 1925.
25. H. Kulenkampff, Ann. der Physik, **87**, p. 597; 1928.
26. D. L. Webster, Phys. Rev., **6**, p. 56: 1915.
27. E. H. Kennard, Phys. Zeits., **24**, p. 372; 1923.
28. E. O. Lawrence, Phys. Rev., **28**, p. 947; 1926, and **29**, p. 609; 1927.
29. Millikan and Cameron, Phys. Rev., **32**, p. 533; 1928.
30. See A. H. Compton, X Rays and Electrons, p. 188.
31. K. T. Compton and C. C. van Voorhis, Phys. Rev., **26**, p. 436, and **27**, p. 724; 1926. Webster, Clark, Yeatman, and Hansen, P. N. A. S., **14**, p. 679; 1928.

WASHINGTON, January 11, 1929.