U.S. Department of Commerce Bureau of Standards

RESEARCH PAPER RP678

*Part of Bureau of Standards Journal of Research, vol. 12, May 1934*

# A PROPELLER-VIBRATION INDICATOR

By Hugh L. Dryden and L. B. Tuckerman

ABSTRACT

It is believed that fatigue failures of aircraft propellers, which occasionally occur, are due to resonant vibrations of the propeller or the propeller-engine assembly. This paper describes an instrument to be mounted on the end of the engine shaft for determining the engine speeds at which dangerous vibrations occur. The instrument has been tested on the propeller vibration apparatus at the Bureau of Standards, and arrangements have been made for trying it on an airplane.

CONTENTS

| | | Page |
|---|---|---|
| I. | Introduction | 537 |
| II. | Preliminary experiments | 538 |
| III. | First design | 539 |
| IV. | Second design | 540 |
| V. | Further development | 542 |

## I. INTRODUCTION

At the request of the Aeronautics Branch of the Department of Commerce the Bureau of Standards has been investigating the causes of failures of aircraft propellers, because these failures, though very few in number in comparison with the large number of propellers in service, generally cause serious and sometimes fatal accidents. All the propeller failures examined at the Bureau of Standards have, with a few exceptions, had the characteristics of fatigue failures, that is, failures due to vibratory stresses. Not only is this true, but the evidence seems to show that they are fatigue failures caused by relatively few alternations of relatively high stresses. The only phenomenon which has been found to be capable of producing the high stresses necessary to produce these failures is the phenomenon of resonant vibrations either of the propeller or of the combination of propeller and engine.

To study the stresses produced in such resonant vibrations, a propeller vibrating apparatus was constructed at the Bureau of Standards. This apparatus has been briefly described in BS. Research Paper 556. The work so far carried out on this apparatus indicates that large resonant vibrations occur only when the frequency of the exciting torque is within 1.0 cycle per second of one of the natural frequencies of the system. Even under flight conditions, it does not seem probable that large vibrations would exist at frequencies differing from one of the natural frequencies of the system by more than a few cycles per second.[1]

[1] We have measured the stress distribution in the principal modes of vibration for two propellers and have computed the stress distribution for one propeller. The measured and computed values were found to agree very well. This part of the investigation will be described in a subsequent paper.

If these conclusions are warranted, propeller failures in flight are in most cases to be ascribed to the occasional coincidence, over relatively short periods of time, of engine speed (or its multiples or submultiples) with a resonant frequency of the propeller or the propeller-engine assembly. Further, the most direct and immediate method of avoiding future propeller failures is (as has already been pointed out by the Army engineers)[2] never to fly even for a few seconds at any such critical engine speed.[3]

To make this method workable, some certain means must be available for determining these critical engine speeds, not merely for a given propeller or even a given combination of propeller and engine, but for a given combination of propeller and engine under actual flight conditions.

The War Department and the Bureau of Standards have experimented with nonrotating propeller and hub combinations. On the basis of certain theoretical investigations it is possible to calculate from the resonant frequencies of these nonrotating combinations, values for the dangerous critical engine speeds when these propellers are rotated as in actual service. In our opinion these researches, although valuable, give less certain results than the direct determination of critical engine speeds with a given combination of engine and propeller in actual flight.

As a first step in making such measurements possible, we have designed and constructed an instrument, which, when mounted on the propeller vibrating apparatus at the Bureau, gives unmistakable indications of resonant vibrations when such vibrations are visually seen to be present. The theory of the instrument indicates that it will also function on a rotating propeller where visual observation is impractical. It is the purpose of this paper to describe this propeller-vibration indicator.

## II. PRELIMINARY EXPERIMENTS

In a study of the performance of the propeller vibration apparatus, the motion of the shaft about its axis of rotation was measured by means of a mirror mounted on the shaft which reflected the light from a lamp onto a scale. It was observed that when the exciting frequency was such that resonant vibrations occurred, the amplitude of motion of the reflected spot of light was increased to many times that observed at higher or lower frequencies. This observation suggested the possibility of detecting dangerous propeller vibration by an instrument mounted on the engine shaft at the propeller hub which would respond to the torsional oscillation of the shaft about its axis.

Theoretically a wide variety of devices could be used. Optical and mechanical lever systems were considered impractical because of the difficulty of reading at long distances. Electrical distance-indicating devices would obviate that difficulty. Here also a wide variety of effects could be used, such as variations of electrical capacity, variation of magnetic reluctance, variation of electrical resistance, or the

[2] Air Corps Technical Report 3891. Study of Types of Vibration Possible in Aircraft Propellers. Lt. H. H. Couch. Sept. 21, 1933.

[3] If this picture of propeller failures is correct, safety cannot be guaranteed by a reasonable increase in cross section of the propeller blade, since such redesign merely shifts the resonant frequency to a new value. Moreover, while the presence of nicks in the surface of the blade may contribute to the failure, the failure would probably occur in any case if the engine speed were closely adjusted to one of the critical values.

electromagnetic generation of current. The instrument which seemed most promising was some form of electromagnetic generator.

Experiments were begun with a small d-c electric motor used as a generator. Two general arrangements were contemplated. In one, the field was to be stationary with respect to the airplane, and the armature rotated continuously. The torsional oscillation would cause a variation in speed, giving an alternating component in the current which could be separated by a transformer. In the other arrangement, both field and armature were to rotate with the propeller, a slight freedom of motion between the two being permitted, the free member being given a definite position, relative to the fixed member, by means of weak springs when at rest or in uniform rotation. Because of the inertia of the free member, a torsional vibration would generate directly an alternating current. The sensitivity was found to be ample, but the use of field magnets excited by electric current

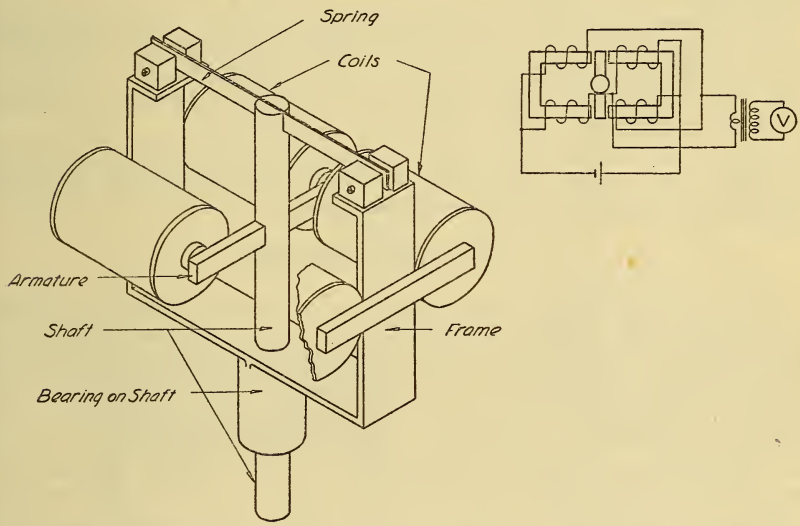


FIGURE 1.—*Experimental model of propeller-vibration indicator, first design.*

complicated the design. The mechanical mounting of the device on an actual airplane was likewise difficult, if not impractical.

A brief study was made of the possibility of using a field supplied by a permanent magnet, as in the ordinary magneto. No existing device was sufficiently small and sensitive to be readily adapted, and the design and construction of an entirely new generator appeared to be a long and expensive undertaking. Moreover, at this stage, a different type of generator appeared to be more promising.

## III. FIRST DESIGN

In the experiments with a generator utilizing an electromagnetic field, accidental opening of the field circuit induced in the armature circuit a large current which burned out a sensitive thermal milliammeter connected in the armature circuit. This mishap suggested a bridge arrangement which was improvised from the four coils of two ordinary 20-ohm relays. The general arrangement is shown in figure 1. The motion of the armature generates in the four coils electro-

motive forces which are caused to send currents in the same direction through the indicating instrument by the bridge connection. The bridge connection likewise approximately eliminates the magnetizing currents from the meter circuit, although it is desirable to use a transformer as shown.

The armature must be maintained in the central position by means of springs sufficiently strong to overcome the magnetic pull. The stiffness of the springs together with the inertia of the moving system determines the natural frequency of oscillation of the instrument which should be as low as possible. Hence the armature is made the fixed member and the coils, cores, and pole-pieces are used to give the moving part a large moment of inertia. Since the motions to be measured are very small, it is advantageous to use fixed stops to prevent unnecessarily large travel so that weaker springs may be used than would be required if the armature came very close to the pole-pieces.

This arrangement can be made exceedingly sensitive for a given size. Its mounting on the end of the shaft offers no mechanical difficulties, but four electrical connections must be brought to it. For one of these the engine shaft and frame may be used, but the other three must be made by insulated slip rings.

A generator of this type but of a more compact mechanical design has been constructed, primarily for use on the propeller vibration apparatus where slip rings are not required.

## IV. SECOND DESIGN

The first crude model of an instrument of the first design was shown to our associates in the electrical division for suggestions for further development. Dr. Frank Wenner outlined the general arrangement which was used for our second design shown in figures 2 and 3. The principle is essentially that of the Baldwin telephone receiver. The field is supplied by a permanent magnet, which magnetizes the soft iron pole-pieces. When the armature is in the central position, the magnetic flux through it is practically zero. A slight displacement causes a flux through it which reverses when the direction of displacement reverses. The coils in which the voltage is induced surround the armature on each side of the shaft and are connected in series. A stabilizing spring system is used as in the first design.

The instrument actually constructed was built around a magnet taken from an old electrical instrument. The air-gap between armature and pole-piece was 0.010 inch, and the motion was limited by stops to 0.004 inch in either direction. Each of the coils consisted of approximately 2,500 turns of no. 40 enameled wire, the direct current resistance of the two coils in series being 1,000 ohms. The indicating instrument used is a Weston model 600 rectifier type, with a range of 100 microamperes and impedance of the order of 3,500 ohms. Full-scale reading of the indicator corresponds to an angular velocity of the armature relative to the magnet of the order of ½ radian per second. A shunt is used to decrease the sensitivity when required. With these high resistances in the generator and meter, the slip-ring arrangement may be very crude and a long metallic ground return may be used without difficulty.

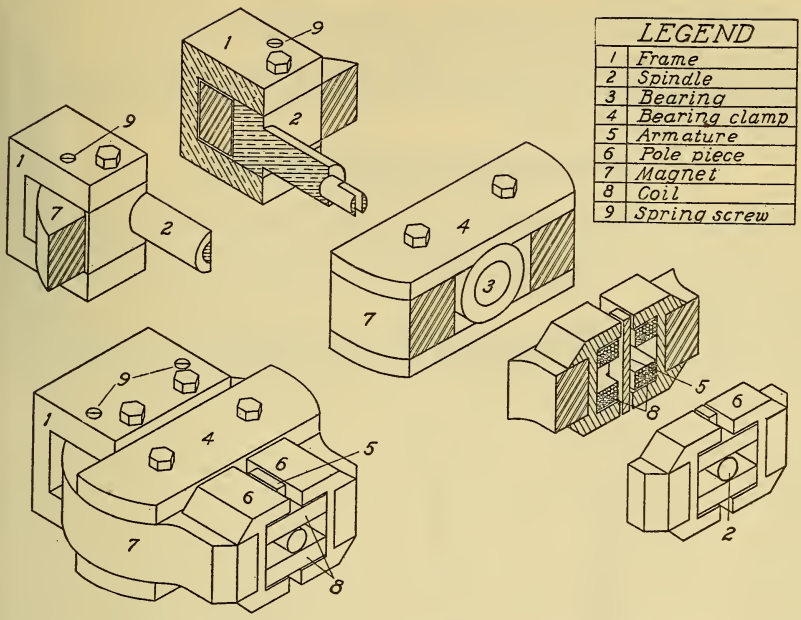


FIGURE 2.—*Propeller-vibration indicator, second design. Dissected view, cover removed.*

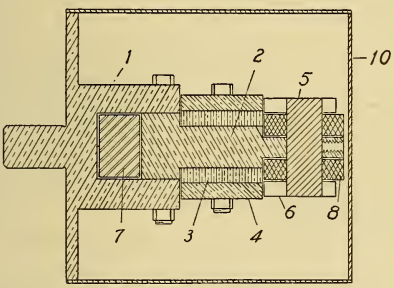


| LEGEND | |
|---|---|
| 1 | Frame |
| 2 | Spindle |
| 3 | Bearing |
| 4 | Bearing clamp |
| 5 | Armature |
| 6 | Pole piece |
| 7 | Magnet |
| 8 | Coil |
| 9 | Spring screw |
| 10 | Cover |

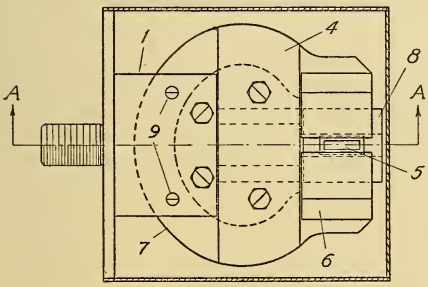


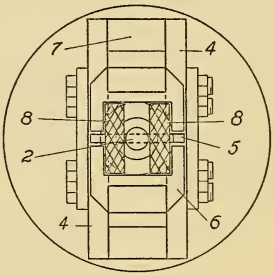


FIGURE 3.—*Propeller-vibration indicator, second design. Side view, end view, and section.*

A typical curve for a propeller on the vibrating apparatus is shown in figure 4. The sharp resonant peaks are very prominent.

By the use of one stage of amplification and a cathode-ray oscillograph, it is possible to observe the wave form of the variation of angular velocity, if desired.

## V. FURTHER DEVELOPMENT

It appears easily possible to reduce the weight considerably below the 4 pounds of the present instrument by casting a magnet from some of the newer magnet steels which permit a greater intensity of magnetization.

While the instrument was developed primarily for the detection of vibrations of aircraft propellers, it has application in other fields

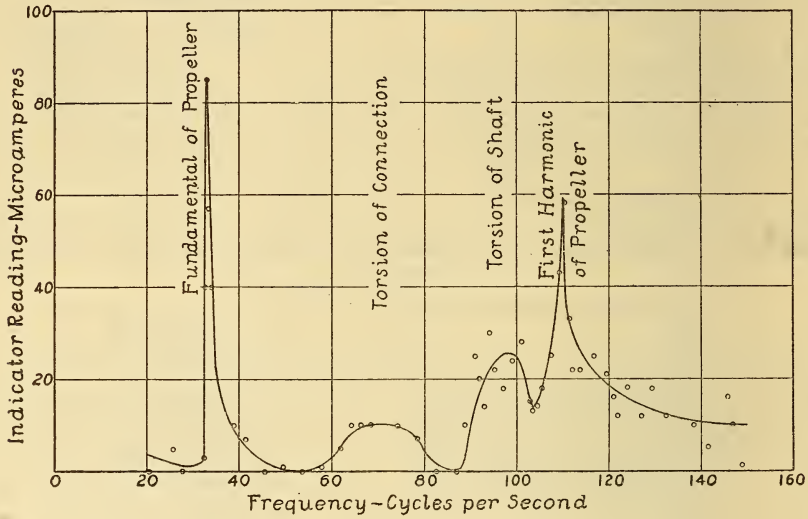


FIGURE 4.—*Typical curve for a propeller on the vibrating apparatus.*

where torsional vibrations are of interest. For example, we have mounted the indicator on an electric generator and on an electric motor. In each case, the indicator gives a reading increasing with load, and the frequency of the most intense vibrations corresponds to that harmonic of the speed of rotation which is equal to the number of armature slots.

The present instrument indicates clearly the presence of resonant vibrations of the propeller blade and torsional vibration of the shaft on the propeller vibrating apparatus at the Bureau. Arrangements have been concluded to try the indicator on a rotating propeller on an aircraft in cooperation with the National Advisory Committee for Aeronautics.

WASHINGTON, March 24, 1934.