S-526

# TRANSMISSION AND ABSORPTION OF SOUND BY SOME BUILDING MATERIALS

By E. A. Eckhardt and V. L. Chrisler


## ABSTRACT

This paper contains a report of the work on sound transmission through partition walls, and on the sound-absorbing properties of some of these walls and of various other materials commonly used in building construction. A description is given of the new sound chamber erected for the purpose of this work; details of the experimental methods are described, and relative results of both transmission and absorption measurements tabulated. These results are given for frequencies covering the range from 250 cycles to 3,470 cycles per second. Specifications for the construction of the various panels used in transmission tests are appended.

It is found that as far as transmissivity goes certain panels are sufficiently opaque to sound to reduce a sound of painful intensity to complete inaudibility. The poorest panels tested were capable of reducing such a sound to about the intensity of the ordinary speaking voice.


## CONTENTS

### Part I. TRANSMISSION


| | | Page |
|---|---|---|
| I. | Introduction | 38 |
| II. | Sound chamber | 39 |
| III. | Principle of the method | 40 |
| IV. | Experimental details | 41 |
| | 1. The sound source | 41 |
| | 2. Sound-intensity measurements | 44 |
| | 3. The procedure of measurement | 44 |
| V. | Experimental data | 45 |
| VI. | General specifications for the construction of the test panels | 48 |
| | 1. Erection of wood studs | 48 |
| | 2. Erection of wood lath | 48 |
| | 3. Scratch coat, lime plaster | 48 |
| | 4. Scratch coat, gypsum plaster | 48 |
| | 5. Brown coat, lime plaster | 49 |
| | 6. Brown coat, gypsum plaster | 49 |
| | 7. Smooth-finish coat | 49 |
| | 8. Erection of metal lath | 50 |
| | 9. Sand-finish coat | 50 |
| | 10. Erection of gypsum plaster board | 50 |
| | 11. Erection of metal studs | 50 |
| | 12. Erection of solid partitions | 50 |

VI. General specifications for the construction of the test panels—Con. Page
13. Lime scratch coat on masonry 51
14. Gypsum scratch on masonry 51
15. Erection of clay tile 51
16. Coats of lime and Keene's cement 51
VII. Description of panels 52

Part II. MEASUREMENT OF SOUND ABSORPTION

I. Acoustical surface absorptivity, and theory of absorption measurements 53
II. Details of the method 61
III. Experimental results 62

## Part I. TRANSMISSION: THE SOUND-INSULATING PROPERTIES OF PARTITION WALLS (CHIEFLY LATH AND PLASTER)

### I. INTRODUCTION

With the increasing concentration of human life in centers of population and the development of fireproof structures the problem of sound insulation has become one of acknowledged economic and social importance. In the construction of apartment houses, hotels, office buildings, and hospitals the choice of building materials now always involves consideration of their sound-insulating properties. In this consideration the architect and builder have been and still are handicapped by the lack of authentic information. Some data are available,[1] but the making of sound-transmission measurements is at best a laborious and time-consuming process, and building materials and methods of construction are being developed very much faster than their sound-insulating properties are being determined. Only a large scale and expeditious program of sound-transmission measurements could overcome such odds.

The present paper outlines the method devised by the sound laboratory of the Bureau of Standards for doing this work expeditiously and gives the results thus far obtained. The problem is still growing faster than its solution.

This paper covers a program of sound-transmission measurements made on 30 panels of partition-wall construction, a large number being types now in general use. In the framing and the carrying out of this program the bureau has had the active aid and cooperation of the Gypsum Industries (Inc.), and the National Lime Association.

[1] F. R. Watson, Acoustics of Buildings, Wiley, 1923. P. Sabine, The American Architect, 1900. F. Weisbach, Bauakustik, Berlin, 1913.

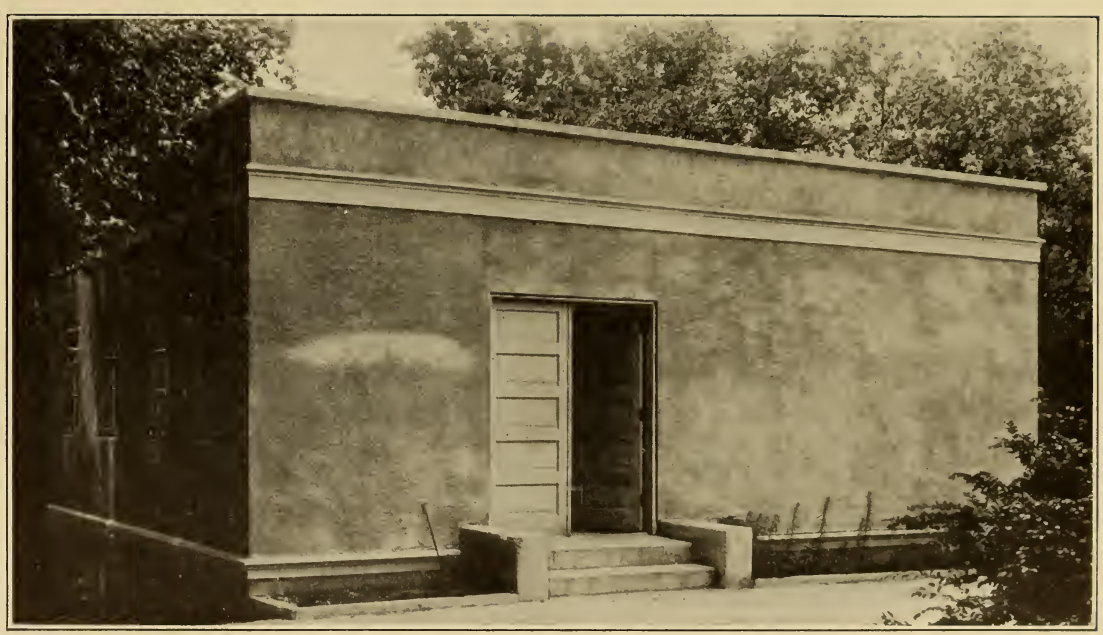

Fig. 1.—*Sound chamber, front view*

Fig. 2.—*Sound chamber, rear view*

## II. SOUND CHAMBER

The sound chamber is a laboratory specially constructed for sound-transmission measurements. Two photographs indicating its character are shown in Figures 1 and 2, the latter showing also the constructing of panels for test to the side and rear of the chamber. Figure 3 shows a vertical section of the chamber. $S$ is the source or transmitting room. It communicates through the panel window in the ceiling with the receiving room $R_1$ above and through the panel window at the right with the receiving room $R_2$. In the figure test panels are shown in place at both windows. The panel forms the only mechanical tie between the transmitting and receiving rooms. The walls are 6 inches or more thick and are constructed of concrete.

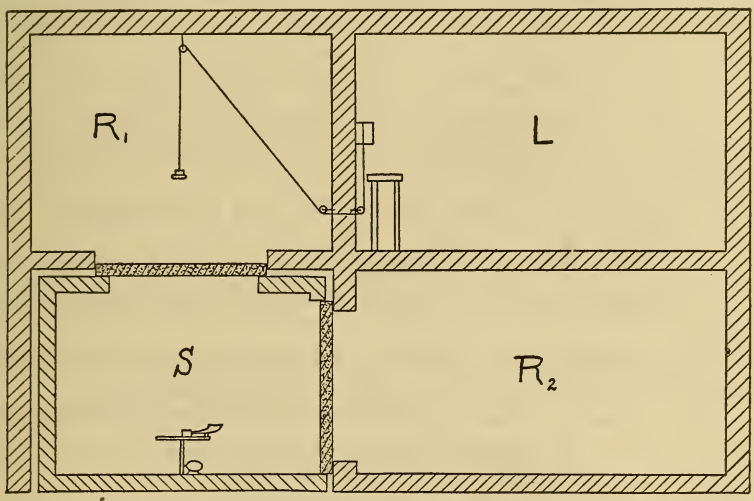


FIG. 3.—*Sound chamber, vertical section*

Any sound not transmitted by the panel has an alternative path through two concrete walls, each 6 inches in thickness, separated by a 3-inch air space. In practice the ceiling opening into $R_1$ has been used to test panels which are light enough to be built in the yard and to be moved into the receiving room and laid into the opening for test. This procedure permits the seasoning of the panel to be carried on elsewhere and permits the prompt removal and replacement of a panel after completion of a test. Maximum availability of the panel opening for testing purposes is thus provided.

The vertical opening into $R_2$ has been used primarily for panels which are too heavy to move, which are erected in place and must season there for a period of two or three months before it is desirable to make measurements on them.

It has been found that the transmission of a panel varies considerably during the first two months of its history. After three months the changes are much less and depend somewhat on the state of dryness of the panel. For this reason panels have always been stored indoors for two or three weeks prior to making measurements on them.

## III. PRINCIPLE OF THE METHOD

In practice, any material to be subjected to measurement of sound transmission is made to fill a window between two rooms. A source of sound is operated in one room (the transmitting room), and intensity measurements are made on both sides of the panel, in the transmitting room, and in the room on the opposite side of the panel, which we shall call the receiving room. It is the problem of experimental work to realize as nearly as possible ideal conditions, such as uniform distribution of sound intensity free from interference patterns in both the transmitting and the receiving room. This will, in general, be impossible near the source and near the panel (or near the window with panel absent). In these regions measurements of intensity are not made.

The following experimental devices are used to approximate these ideal conditions:

1. The source is not of a single frequency, but varies cyclically over a frequency band, the width of which is under experimental control.
2. The position of the source in the transmitting room is varied cyclically by revolving it at the end of a rotating arm.
3. The intensity measuring device involves a long period galvanometer (10 to 15 seconds) which provides a time average of the intensity for any position of the sound receiver.

The frequency variation and the motion of the source keep the interference pattern in motion, constantly stirring up the sound, and the intensity measuring device gives a time average of the resulting intensity.

With the window open a series of measurements is made with the telephone receiver at different places along a line perpendicular to the middle point of the opening. In general, the intensities at these points fall off as the distance of the receiver from the source of sound is increased. An average is taken of these values in the transmitting room and also of those in the receiving room. Let these mean values be $T$ and $R$, respectively. The panel is now put in place and the measurements repeated. The value of $T$ is usually increased, say, to $T+t$, and that of $R$ decreased, say, to $R-r$. The

apparent reduction effected in the mean intensity in the receiving room by the panel being placed in the window is $\frac{R-r}{R}$; but with the panel in place the intensity in the transmitting room is greater than that with the window open in the ratio $\frac{T+t}{T}$. Had this greater intensity existed in the transmitting room with the window open, the mean intensity in the receiving room would have been $R\,\frac{T+t}{T}$; and as this is actually reduced to $R-r$, the true reduction factor of the panel may be taken as $\frac{R-r}{R} \cdot \frac{T}{T+t}$.

It occasionally happens, especially with high frequencies, that the interference pattern in the transmitting room is such that the intensity actually rises as the receiver is moved away from the source, but it is found that the mean value of such a curve agrees closely with the mean value when the curve happens to slope the other way.

It will be noticed that the long-period galvanometer averages the amplitudes of the receiving diaphragm, which is afterward squared to represent the intensity. Theoretically it is the mean of the squares that should be used rather than the square of the mean. It is obvious that if the variation in intensity be large compared with the average intensity a considerable error may thus be introduced. As a matter of fact, the variation in intensity in the actual experiments was never greater than about one-fifth the average intensity. Calculation shows that the error in this case is negligibly small in comparison with the error of measurement.

## IV. EXPERIMENTAL DETAILS

### 1. THE SOUND SOURCE

The source of sound is a type of radio loud speaker which is supplied with alternating current from an electron-tube oscillator. It is mounted on a rotating arm so that the bell of the horn rotates in a circle approximately 4 feet in diameter. The rotating arm is motor driven through a worm and wheel. The speed of rotation is adjusted by a rheostat in the armature circuit to about one revolution per second. The motor drive must, of course, be as quiet as possible.

The electron-tube oscillator which provides the alternating current for the loud speaker is shown schematically in Figure 4. One tube acts as an oscillator and the other two as amplifiers. The frequency of the oscillations is adjusted chiefly by switching of condensers or by changing inductance in the tapped transformer or both. For very low frequencies all the windings on the transformer and all the con-

densers are switched in. For very high frequencies only one coil on each of the primary and secondary sides is used, and only the smaller condensers.

In parallel with the bank of fixed condensers are shown two variable condensers, one being an ordinary variable condenser with the plates immersed in oil and the other being a specially designed revolving air condenser which is motor driven (fig. 5). The revolution of this condenser at the rate of one or two revolutions per second causes a cyclic change in the capacity of the oscillating circuit and a corresponding change in the frequency of the oscillating current. The sound emitted by the loud-speaker is therefore not a pure tone, but a sound of rising and falling pitch.

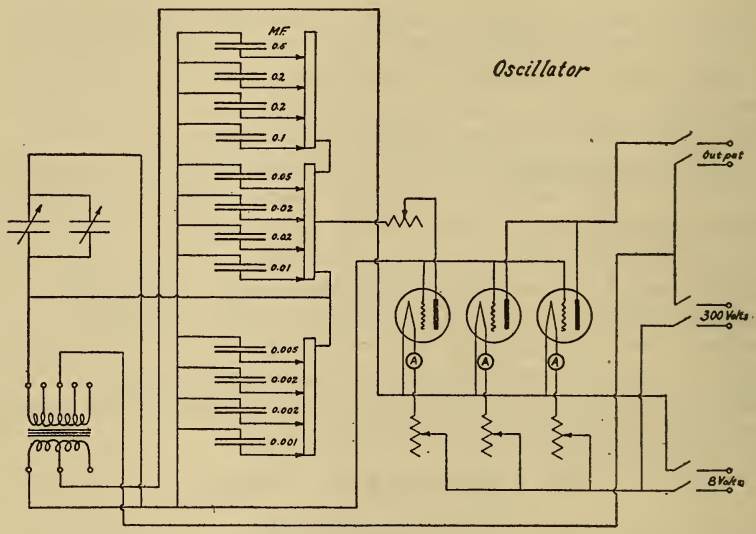


FIG. 4.—*Oscillator circuit*

The special condenser is so designed that any number of the fixed plates from 1 to 30 (the total available) can be switched into the circuit. In this way the width of the frequency band covered by the notes produced can be adjusted within limits.

The adjustable resistance shown in the plate circuit of the oscillator tube gives some control over the purity of wave form. In general, for the circuit used it is desirable to use as much resistance here as is compatible with adequate power output.

The frequency of the oscillator is adjusted and checked periodically by means of a frequency meter of the type described by Kennelly and Manneback.[2] This consists of a piano string provided with two

[2] Journ. Frankl. Inst., **192**, September, 1921, p. 349.

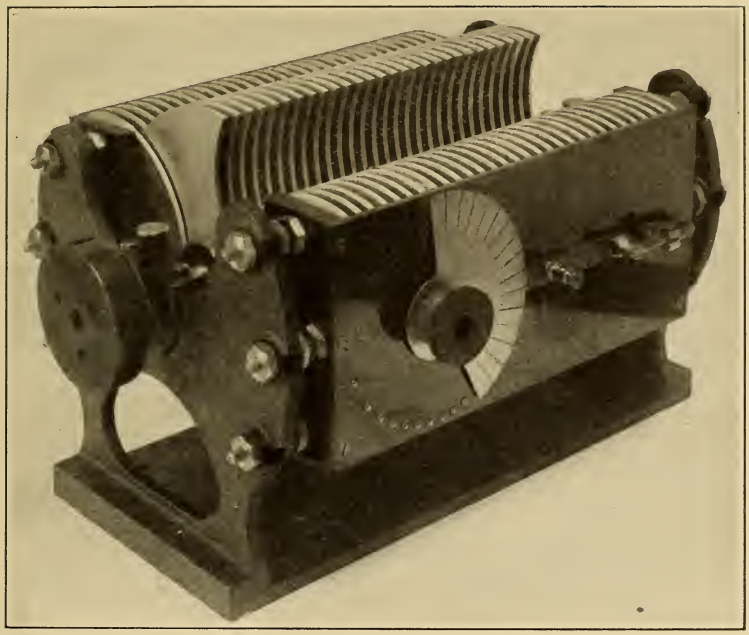

FIG. 5.—*Revolving condenser*

movable bridges (fig. 6) placed equidistant from the middle point of the string. The positions of these bridges may be altered by a right and left hand screw, but in such a manner that they remain equidistant from the mid-point of the string, inclosing a longer or shorter portion of it as they are moved.

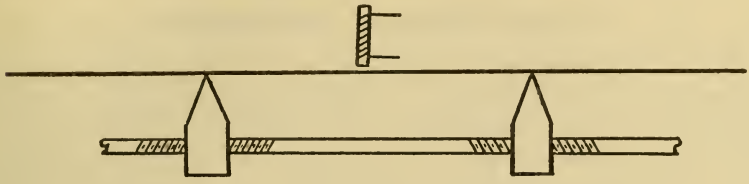

FIG. 6.—*Frequency meter*

Opposite the mid-point is fixed rigidly a telephone receiver, the windings of which are supplied with alternating current of the oscillator frequency. The distance between the bridges is varied until the string responds in resonance. The distance between the bridges is then read from a scale on the instrument and the corresponding frequency read from a calibration curve. If adjustment to a pre-

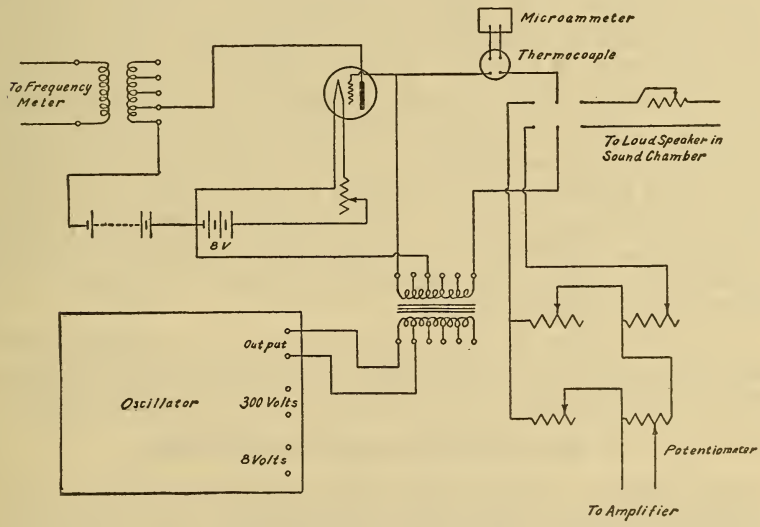


FIG. 7.—*Potentiometer connections*

determined frequency is desired, the proper distance between the bridges, as read from the calibration curve, is set on the instrument and the oscillator circuit varied until resonance of the string indicates that the desired frequency has been attained.

To avoid loading the oscillator with the frequency meter the test current is derived from an auxiliary electron tube which is controlled

by the oscillator as indicated in Figure 7. The thermocouple and microammeter shown in this figure serve to measure the current being supplied to the loud speaker and aid somewhat in keeping the sound intensities constant and in securing approximately equal intensities at different times.

## 2. SOUND-INTENSITY MEASUREMENTS

The sound intensity is measured by a method similar to that described by J. C. Karcher.[3] A magnetophone (telephone receiver) is placed where the magnitude of the intensity is to be determined. The sound waves acting on the diaphragm develop in the windings an emf which is proportional to the amplitude of the sound wave if the sound is not too intense. This emf is applied to an amplifier, the output of which is rectified. The magnitude of the rectified current is indicated by the deflection of a long-period galvanometer. The magnitude of this deflection is adjusted if necessary by regulating the amplifier and shunting the galvanometer.

The galvanometer deflection is noted and the amplifier connected to a potentiometer device which derives an alternating emf of the sound frequency in use from the oscillator as shown in Figure 7. The potentiometer is adjusted until the previously noted galvanometer deflection is obtained. The emf then derived from the oscillator is the same as that previously obtained from the magnetophone provided (1) that the amplifier adjustment has remained constant between the two measurements and (2) provided the input characteristics of the amplifier are not changed by substituting the potentiometer for the magnetophone. The measurements are made in rapid succession, and constancy of the amplification over short intervals is not difficult to attain. The second condition was also satisfied by the input circuit arrangement used.

It is worth noting that the characteristics of the amplifier and of the rectifying system are eliminated by the procedure outlined above and that no calibration of the system need be made or maintained.

## 3. THE PROCEDURE OF MEASUREMENT

The procedure of measurement was so planned that all the observations and controls of the apparatus are effected in the laboratory $L$ (see fig. 3). The telephone receiver is moved about by a system of wheels and pulleys and the operator enters neither the transmitting room $S$ nor the receiving room $R_1$ (or $R_2$) except to move the telephone receiver from one to the other or to remove or replace the panel under test. A series of measurements consists of approximately 10 intensity determinations between the source and panel levels in

[3] J. C. Karcher, B. S. Sci. Paper, No. 473.

the room $S$, an equal number in room $R_1$ to the ceiling, and approximately 20 determinations at the same points with the panel removed. Six independent series of such measurements were made at each frequency.

## V. EXPERIMENTAL DATA

Transmission measurements on the panels tested were made over four frequency bands (pitch ranges) well distributed over the audio-frequency range. The narrowness of the low-frequency band (250 to 257) is due to the fact that the available capacity of the revolving condenser becomes a relatively small part of the total capacity of the oscillating circuit at this frequency. At the higher frequencies the width of the band is deliberately reduced by using only part of the fixed plates of the revolving condenser. A frequency of 250 cycles corresponds to "middle C," an average between the male and female voice. The soprano "high C" corresponds to a frequency of about 1,024 cycles.

Reference to Figure 8, which presents in graphical form the data for 34 panels for the 4 frequency bands, shows the importance of making transmission measurements at more than a single frequency. Many examples can be picked out in which the advantage indicated by a comparison at one frequency is reversed when the comparison is made at another. For example, panel No. 28 is a better insulator, than panel No. 42 for the two high-frequency bands, but for the two low-frequency bands panel No. 42 is decidedly the better insulator.

It is well recognized that as the energy of a sound wave increases, the response of the ear fails to keep pace with it. This gives us two scales of intensity, the physical scale and the ear scale. These scales are connected by the following empirical relationship: The impression of loudness is proportional to the logarithm of the intensity producing it.

A sound barely perceptible to the sense of hearing is naturally regarded by the ear as of very low intensity, nearly zero; but because still feebler sound waves may exist the physicist calls the sound at the limit of audibility unity, while on the ear scale its value would be zero, which is the common logarithm of unity. A sound so loud as to be painful may have an intensity of a million units on the physical scale while on the ear scale this loudness would be rated as 6, since 6 is the common logarithm of 1,000,000.

If two rooms, $A$ and $B$, are separated by an open window and a sound source is operated continuously in room $A$, the average intensity in room $B$ is less than in room $A$. If a partition wall panel is made to seal the window, there is a further reduction of intensity in room $B$. The ratio of intensities in rooms $B$ and $A$ with the panel

absent divided by this ratio obtained with the panel present has been used as the "reduction factor" referred to in Tables 1 and 2.

Since sound insulation is concerned with the sensation received by the ear, the transmission results are most naturally expressed in the ear scale; that is, logarithmically. This has been done in stating the results here following. Referring to Figure 8, the logarithm of the reduction factor for panel No. 28 for the high-frequency band is 6. This means that the reduction factor is $10^6$, or 1,000,000, and that the panel transmits one millionth of the incident sound energy. The similar number for panel No. 6 is nearly 3; this means that the reduction factor is $10^3$, or 1,000, and the panel transmits one-thousandth of the incident sound energy.

TABLE 1

| Panel number | Logarithm of reduction factor for bands | | | |
|---|---|---|---|---|
| | 250 to 257 | 1,000 to 1,087 | 2,000 to 2,570 | 3,000 to 3,470 |
| 1 | 5.27 | 5.32 | 5.77 | 6.37 |
| 2 | 4.26 | 4.97 | 5.49 | 6.51 |
| 3 | 5.89 | 6.42 | 7.66 | 7.66 |
| 4 | 4.37 | 3.93 | 5.07 | 5.39 |
| 5 | 5.38 | 5.06 | 6.70 | 7.20 |
| 6 | 3.14 | 4.29 | 4.21 | 5.45 |
| 7 | 5.72 | 6.04 | 6.84 | 6.83 |
| 8 | 5.21 | 5.70 | 6.53 | 6.55 |
| 9 | 6.29 | 6.32 | 7.47 | 7.33 |
| 10 | 5.17 | 5.17 | 5.39 | 5.75 |
| 11 | 5.53 | 6.10 | 6.39 | 6.75 |
| 12 | 5.31 | 5 31 | 5.50 | 5.89 |
| 13 | 5.05 | 5.46 | 6.14 | 6.17 |
| 14 | 5.10 | 4.39 | 5.75 | 6.00 |
| 15 | 5.87 | 6.13 | 6.16 | 5.97 |
| 16 | 4.90 | 4.75 | 5.83 | 5.96 |
| 18 | 5.26 | 5.05 | 5.52 | 5.75 |
| 20 | 3.41 | 4.06 | 4.70 | 4.86 |
| 20a | 3.64 | 3.79 | 4.50 | 4.67 |
| 22 | 4.21 | 4.45 | 4.91 | 4.90 |
| 24 | 3.70 | 4.12 | 4.70 | 4.67 |
| 27 | 3.85 | 3.92 | 4.68 | 4.68 |
| 28 | 3.91 | 3.57 | 5.93 | 5.70 |
| 37 | 6.25 | 6.55 | 5.89 | 5.39 |
| 38 | 4.95 | 4.26 | 5.22 | 5.66 |
| 39 | 5.35 | 6.07 | 7.16 | 5.71 |
| 40 | 5.92 | 5.84 | 5.72 | 5.26 |
| 41 | 5.21 | 5.23 | 5.70 | 5.38 |
| 42 | 4.70 | 4.66 | 5.18 | 5.35 |
| 43 | 4.40 | 4.11 | 5.34 | 5.77 |
| 44 | 4.34 | 4.37 | 5.50 | 5.73 |
| 45 | 4.63 | 4.25 | 5.66 | 5.95 |
| 46 | 4.70 | 4.23 | 5.46 | 5.96 |
| 47 | 4.80 | 5.28 | 6.71 | 6.08 |

If the source of sound is loud enough to be painful to a listener close by, a panel whose reduction factor is 6 will reduce this sound until it is barely audible, while a panel of factor 3 will reduce it to approximately the intensity of an ordinary tone of voice.

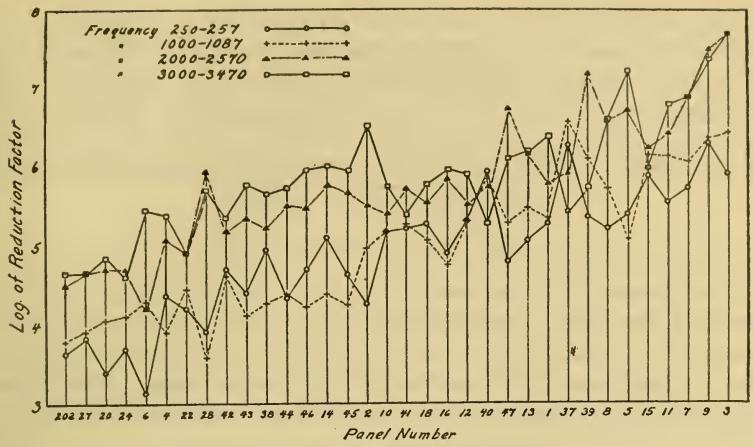


FIG. 8.—*Comparative transmissivities of panels*

TABLE 2

| Panel number | Logarithm of reduction factor for bands | | | | |
|---|---|---|---|---|---|
| | 250 to 257 | 1,000 to 1,087 | 2,000 to 2,570 | 3,000 to 3,470 | Mean |
| 20a | 3.64 | 3.79 | 4.50 | 4.67 | 4.15 |
| 27 | 3.85 | 3.92 | 4.68 | 4.68 | 4.24 |
| 20 | 3.41 | 4.06 | 4.70 | 4.86 | 4.26 |
| 24 | 3.70 | 4.12 | 4.70 | 4.67 | 4.30 |
| 6 | 3.14 | 4.29 | 4.21 | 5.45 | 4.27 |
| 4 | 4.37 | 3.93 | 5.07 | 5.39 | 4.69 |
| 22 | 4.21 | 4.45 | 4.91 | 4.90 | 4.62 |
| 28 | 3.91 | 3.57 | 5.93 | 5.70 | 4.78 |
| 42 | 4.70 | 4.66 | 5.18 | 5.35 | 4.97 |
| 43 | 4.40 | 4.11 | 5.34 | 5.77 | 4.91 |
| 38 | 4.95 | 4.26 | 5.22 | 5.66 | 5.02 |
| 44 | 4.34 | 4.37 | 5.50 | 5.73 | 4.99 |
| 46 | 4.70 | 4.23 | 5.46 | 5.96 | 5.07 |
| 14 | 5.10 | 4.39 | 5.75 | 6.00 | 5.31 |
| 45 | 4.63 | 4.25 | 5.66 | 5.95 | 5.12 |
| 2 | 4.26 | 4.97 | 5.49 | 6.51 | 5.31 |
| 10 | 5.17 | 5.17 | 5.39 | 5.75 | 5.37 |
| 41 | 5.21 | 5.23 | 5.70 | 5.38 | 5.38 |
| 18 | 5.26 | 5.05 | 5.52 | 5.75 | 5.39 |
| 16 | 4.90 | 4.75 | 5.83 | 5.96 | 5.36 |
| 12 | 5.31 | 5.31 | 5.50 | 5.89 | 5.50 |
| 40 | 5.92 | 5.84 | 5.72 | 5.26 | 5.69 |
| 47 | 4.80 | 5.28 | 6.71 | 6.08 | 5.72 |
| 13 | 5.05 | 5.46 | 6.14 | 6.17 | 5.71 |
| 1 | 5.27 | 5.32 | 5.77 | 6.37 | 5.68 |
| 37 | 6.25 | 6.55 | 5.89 | 5.39 | 6.02 |
| 39 | 5.35 | 6.07 | 7.16 | 5.71 | 6.07 |
| 8 | 5.21 | 5.70 | 6.53 | 6.55 | 6.00 |
| 5 | 5.38 | 5.06 | 6.70 | 7.20 | 6.09 |
| 15 | 5.87 | 6.13 | 6.16 | 5.97 | 6.03 |
| 11 | 5.53 | 6.10 | 6.39 | 6.75 | 6.19 |
| 7 | 5.72 | 6.04 | 6.84 | 6.83 | 6.36 |
| 9 | 6.29 | 6.32 | 7.47 | 7.33 | 6.85 |
| 3 | 5.89 | 6.42 | 7.66 | 7.66 | 6.91 |

In Table 1 the data have been arranged in accordance with the numerical sequence of the panel numbers. The specifications from

which the panels were constructed are given in the appendix. In Table 2 the panels are arranged in the general order of their insulating properties, the best insulators being at the end of the table. The arrangement of data in Table 2 is shown graphically in Figure 8.

## VI. GENERAL SPECIFICATIONS FOR THE CONSTRUCTION OF THE TEST PANELS

### 1. ERECTION OF WOOD STUDS

Three pieces 2 by 4 inches each 7 feet 1½ inches long were cut and placed in the frame parallel to each other and 17 inches on centers in such a way as to divide the frame into four compartments, each 7 feet ½ inch long by 15 inches wide by 4 inches deep. Each piece was securely toe nailed to the top and bottom members of the frame.

### 2. ERECTION OF WOOD LATH

Wood lath was used, approximately ¼ by 1½ by 48 inches, straight, and free from knots and not planed. The laths were erected on both sides of the panel, parallel to each other and ⅜ inch apart, and perpendicular to the direction of the studs. They were cut to such lengths that both ends of each lath came over a support. The end joints between laths were staggered at every seventh lath. A space of ¼ inch was left between the ends of abutting laths. Each lath was nailed to each support it crossed, the nails being staggered along the length of the lath. (About 180 laths required per panel). The laths were thoroughly wetted the day before the scratch coat was applied.

### 3. SCRATCH COAT, LIME PLASTER

This coat was composed of 1 bag of masons hydrated lime, 2½ cubic feet of sand, and 3 quarts of hair. The three ingredients were thoroughly mixed, first dry and again wet. The coat was applied to the lath with sufficient pressure to force the plaster in between the laths to form a good key. The exposed surface should be reasonably true and should cover the face of the lath about ¼ inch. When nearly dry, the surface of the coat was scratched with an appropriate tool making scratches about ⅛ inch deep by 1½ inches apart, and it was allowed to set until it took considerable pressure to break down the edges of the scratches when rubbed with the thumb.

### 4. SCRATCH COAT, GYPSUM PLASTER

This coat was composed of 1 bag of retarded neat gypsum plaster, 1½ cubic feet of sand, and 2 quarts of hair. The ingredients were thoroughly mixed, first dry and again wet, and applied to the lath with sufficient pressure to force the plaster in between the laths to

form a good key. The exposed surface should be reasonably true and should cover the face of the lath about ¼ inch. When nearly hard the surface of the coat was scratched with an appropriate tool, making scratches about ⅛ inch deep by 1½ inches apart. It was allowed to set until it took considerable pressure to break down the edges of the scratches when rubbed with the thumb.

### 5. BROWN COAT, LIME PLASTER

This coat was composed of 1 bag of masons' hydrated lime and 3¾ cubic feet of sand. The ingredients were thoroughly mixed, first dry and again wet, and applied to the scratch coat with sufficient pressure to force the plaster into the scratches. This coat was built out until the total thickness from the face of the studs to the face of the plaster was ⅞ inch, rodded, darbied, and floated to a true, even surface. It was allowed to set until practically air-dry.

### 6. BROWN COAT, GYPSUM PLASTER

This coat was composed of 1 bag of retarded neat gypsum plaster to 2½ cubic feet of sand. The ingredients were thoroughly mixed, first dry and again wet, and applied to the scratch coat with sufficient pressure to force the plaster into the scratches. This coat was built out until the total thickness from the face of the studs to the face of the plaster was ⅞ inch, rodded, darbied, and floated to a true, even surface. It was allowed to set until practically air-dry.

### 7. SMOOTH-FINISH COAT

This coat was composed of 1 bag of finishing hydrated lime to ½ bag of unretarded gypsum gauging plaster. The lime was made into a putty with water at least 24 hours prior to use and stored under a damp cloth. A small amount of this putty was circled out on the plasterer's board. Some water was put into the circle; the gypsum, equal to one-half the volume of the putty, was dusted into the water. The whole was then mixed with a trowel, adding more water if necessary. More material than can be used in 30 minutes was not mixed at one time. The mixture was not retempered, but each batch was started with clean board and tools. The plaster was applied in a thin even layer over the brown coat. It was watched carefully for the appearance of incipient crystallization. When this occurred, it was immediately troweled down to a smooth, true finish, using considerable pressure on the trowel, and brushing the surface with water if necessary. This coat should be as thin as possible without permitting the brown coat to show through.

### 8. ERECTION OF METAL LATH

This was expanded metal lath, painted, medium weight (3.0 lbs./yd.$^2$). The sheets were attached to both sides of the panel, with their longer dimensions across the supports. A sheet of lath being 8 feet long, there were no joints between ends of sheets. The joints between sides of sheets were lapped one full mesh and tied with No. 18 iron wire once, midway between each two supports. Each sheet was securely fastened to every support it crossed, the fastenings being spaced 6 inches apart across the width of the sheet.

### 9. SAND-FINISH COAT

This coat was composed of 1 bag of finishing hydrated lime, ½ bag of unretarded gauging plaster, and 1¼ cubic feet of fine, evenly sized, white sand. The sand was mixed with the hydrated lime when making the putty as described in paragraph 7. The mixing and application was conducted as described in paragraph 7, except that the final troweling was done with a wooden float instead of a trowel.

### 10. ERECTION OF GYPSUM PLASTER BOARD

These boards were 32 by 36 by ⅜ inches. Both sides of the panel were covered with these boards, erected so that the 36-inch dimension ran perpendicular to the studs. The boards were cut so that both ends of each board came over supports. The joints between ends of boards were staggered every row. A space of ¼ inch was left all around each board. Both ends of each board were fastened to the supports once every 8 inches, making five fasteners for each end. Each side (the 36-inch dimension) of each board was fastened to each support it crossed. The joints between boards were staggered on the opposite sides of the panel.

### 11. ERECTION OF METAL STUDS

The metal studs were lengths of ¾ inch steel channels. They were cut 7 feet 2 inches long and sprung into holes drilled in the top and bottom members of the frame. These holes were of such depth that the studs fitted tightly, but were not noticeably bowed. The studs were spaced 17 inches on centers, and the common center line of the studs was midway between the two faces of the panel. The bottom of the channel was parallel to the faces of the panel.

### 12. ERECTION OF SOLID PARTITIONS

The metal studs were erected as in paragraph 11. One layer of metal lath or gypsum plaster board was attached to the bottoms of the channels, as specified in paragraphs 8 or 10, respectively. The lime or gypsum scratch coat was applied to that surface of the lath which was fully exposed, as specified in paragraphs 3 or 4, respec-

tively. Before this scratch coat had set another scratch coat was applied to the opposite side of the same lath, in between the studs. After the two scratch coats had been scratched and become reasonably hard the two brown coats were applied as specified in paragraphs 5 or 6, except that the two were of different thicknesses. The thickness from the exposed surface of the finished brown coat to the nearer face of the studs was ⅝ inch on both sides of the panel. The finish coats were applied to both sides as specified in paragraph 7.

### 13. LIME SCRATCH COAT ON MASONRY

This was proportioned as specified in paragraph 3, except that the hair was omitted. It was mixed and applied as specified in paragraph 3 except that it was rodded, darbied, and floated to a true and even surface. Both sides of the panel were plastered. The thickness of this scratch coat was such that the distance from the exposed surface of the plaster to the nearer surface of the masonry was ⅝ inch.

### 14. GYPSUM SCRATCH COAT ON MASONRY

This was proportioned as specified in paragraph 4, except that the hair was omitted. It was mixed and applied as specified in paragraph 4 except that it was rodded, darbied, and floated to a true and even surface. Both sides of the panel were plastered. The thickness of this scratch coat was such that the distance from the exposed surface of the plaster to the nearer surface of the masonry was ⅝ inch.

### 15. ERECTION OF CLAY TILE

The clay tile were to be 3-cell, 3 by 12 by 12 inches. They were laid in mortar composed of 1 part Portland cement, ⅕ part masons' hydrated lime, and 3 parts sand by volume, to form a 4-inch wall. The surfaces to be plastered should be reasonably true and free from dirt or loose material. The joints were flush with the surface.

### 16. COATS OF LIME AND KEENE'S CEMENT

Coats of lime and Keene's cement were proportioned, mixed, and applied as specified in paragraphs 3 and 5, except that one-fourth of the volume of the lime was replaced by an equal volume of Keene's cement.

## VII. DESCRIPTION OF PANELS

| Panel number | Kind of studding | Kind of lath | Kind of plaster | Paragraphs of general specifications applicable to construction | Plaster coats |
|---|---|---|---|---|---|
| 1 | Wood | Wood | Lime | 1, 2, 3 | Scratch coat only. |
| 2 | do | do | Gypsum | 1, 2, 4 | Do. |
| 3 | do | do | Lime | 1, 2, 3, 5 | Scratch and brown coats only. |
| 4 | do | do | Gypsum | 1, 2, 4, 6 | Do. |
| 5 | do | do | Lime | 1, 2, 3, 5, 7 | 3-coat smooth finish. |
| 6 | do | do | Gypsum | 1, 2, 4, 6, 7 | Do. |
| 7 | do | Metal | Lime | 1, 8, 3 | Scratch coat only. |
| 8 | do | do | Gypsum | 1, 8, 4 | Do. |
| 9 | do | do | Lime | 1, 8, 3, 5 | Scratch and brown coats only. |
| 10 | do | do | Gypsum | 1, 8, 4, 6 | Do. |
| 11 | do | do | Lime | 1, 8, 3, 5, 7 | 3-coat smooth finish. |
| 12 | do | do | Gypsum | 1, 8, 4, 6, 7 | Do. |
| 13 | do | Wood | Lime | 1, 2, 3, 5, 9 | 3-coat sand finish. |
| 14 | do | do | Gypsum | 1, 2, 4, 6, 9 | Do. |
| 15 | do | Wire | Lime | 1, 8, 3, 5, 7 | 3-coat smooth finish. |
| 16 | do | do | Gypsum | 1, 8, 4, 6, 7 | Do. |
| 18 | do | Plaster board | do | 1, 10, 4, 6, 7 | Do. |
| 20 | Metal | Metal | do | 11, 8, 4, 6, 7 | Do. |
| 20a | do | do | do | 11, 8, 4, 6, 7 | Do. |
| 22 | do | do | do | 11, 12, 4, 6, 7 | Solid partition. |
| 24 | do | Plaster | do | 11, 12, 4, 6, 7 | Do. |
| 27 | Clay tile | | Lime | 14, 13, 7 | 2-coat smooth finish. |
| 28 | do | | Gypsum | 15, 14, 7 | Do. |
| 37 | Wood | Wood | Lime and gypsum. | 1, 2, 3, 6, 7 | Lime scratch, gypsum brown, smooth finish. |
| 38 | do | do | do | 1, 2, 4, 5, 7 | Gypsum scratch, lime brown, smooth finish. |
| 39 | do | do | Lime | 1, 2, 21, 7 | 3-coat, lime and Keene's cement, smooth finish. |
| 40 | do | Metal | do [1] | 1, 8, 3, 5, 7 | 3-coat smooth finish. |
| 41 | do | A 4-paper plaster board. | Gypsum | 1, 10, 4, 6, 7 | Do. |
| 42 | do | Sheet metal | do | 1, 8, 4, 6, 7 | Do. |
| 43 | do | Metal | Gypsum wood-fibered.[2] | 1, 8, 4, 6 | Scratch and brown coats only. |
| 44 | do | do | do [3] | 1, 8, 4, 6 | Do. |
| 45 | do | do | do [4] | 1, 8, 4, 6, 7 | 3-coat smooth finish. |
| 46 | do | do | do [3] | 1, 8, 4, 6, 7 | Do. |
| 47 | do | do | (5) | | None. |

[1] The lime plaster for this panel was gauged with Portland cement in proportion of 3 parts of lime to 1 of cement, by weight.
[2] This plaster was used without any sand for both coats.
[3] The brown coat contained 1 part of sand, by weight, to 1 of gypsum wood-fibered plaster.
[4] The scratch and brown coats were the same as in panel 43.
[5] Three-eighths inch thick gypsum wall board joints filled and surfaces decorated with wall paper.

In the interpretation and application of these logarithmic reduction factors, and their corresponding transmission results, these features should be borne in mind:

1. Incident sound (I = 100 per cent) is equal to the sum of the percentages of sound reflected, absorbed, and transmitted.

2. Smooth rigid surfaces reflect sound more completely than even the best mirrors reflect light.

3. In all measurements the sound transmitted through the panels was less than 1/100 of 1 per cent of the incident sound; and over 99.99 per cent failed to pass through the panel in the test.

4. That usual wall openings—doors and windows—have reduction factors considerably less than the panels tested. With such present, the partition wall materials with their much higher sound reduction factors play a very minor part in sound transmission.

## Part II. MEASUREMENT OF SOUND ABSORPTION

### I. ACOUSTICAL SURFACE ABSORPTIVITY, AND THEORY OF ABSORPTION MEASUREMENTS

Absorption accompanies both the reflection and transmission of sound by materials. We are here concerned only with the absorption which attends reflection. Having observed that the two cases of absorption mentioned are frequently confused we deem it advisable to refer to the absorption with which we are here concerned as "surface absorption" and that which accompanies transmission as "volume absorption." Surface absorption is not strictly a surface phenomenon, since in the progress of reflection the wave penetrates into the reflecting material to a greater or less degree. Nevertheless, the name commends itself for making the required distinction. It is the surface absorption which plays an important rôle in determining the acoustical properties of room interiors. Practically all the available data on the acoustical surface absorption of materials have been obtained by an indirect method devised by W. C. Sabine.[1] This method is based on the following considerations. Consider a room in which a source of sound has been emitting continuously until a steady state is reached; that is, until the rate at which sound energy is absorbed by the materials in and bounding the room is the same as the rate at which energy is being supplied by the source. The source is suddenly shut off and the intensity falls according to a logarithmic law. If the equilibrium intensity is 1,000,000 times the threshold intensity (the minimum intensity which is audible) the time in which the intensity decays to the threshold is called the reverberation time. If changes are made in the room affecting only the absorption, the reverberation time varies inversely as the absorbing power. Therefore, the ratio of two reverberation times gives the inverse ratio of the corresponding absorbing powers. If the absorbing power corresponding to any reverberation time is known, then by measuring the reverberation times with and without a given area of absorbing material the surface-absorptivity of the material may be determined. The normal absorbing power of the test room has usually been determined in one of two ways:

1. If the room has windows the reverberation time may be measured (*a*) with the windows closed, (*b*) with part of the windows open,

[1] W. C. Sabine, Collected Papers, Harvard University Press, 1922.

and (*c*) with all the windows open. Let $t_1$, $t_2$, and $t_3$ be the respective reverberation times under these conditions, and let

$a_1$ = absorption coefficient of the wall material,
$s_1$ = area of walls (excluding windows),
$a_2$ = absorption coefficient of closed windows,
$s_2$ = area of closed windows in case *b*,
$s_3$ = area of all windows.

Then, assuming an open window to be a perfect absorber of coefficient unity, we have:

$$\left.\begin{aligned} \frac{t_1}{t_2} &= \frac{a_1\, s_1 + a_2\, s_2 + s_3 - s_2}{a_1\, s_1 + a_2\, s_3} \\ \frac{t_1}{t_3} &= \frac{a_1\, s_1 + s_3}{a_1\, s_1 + a_2\, s_3} \end{aligned}\right\} \qquad (1)$$

which give two equations for the unknown quantities $a_1$ and $a_2$.

2. If no windows are available, or when for other reasons it may be more convenient, a definite area of material of known absorption may be used in lieu of the open windows. If into a normal room of absorption $A_1$ is brought an area $S$ of material of surface absorptivity $a$, and if

$t_r$ = reverberation time of the normal room;
$t_{r+m}$ = reverberation time of the room containing the material to be tested;

then

$$\frac{t_{r+m}}{t_r} = \frac{A_1}{A_1 + aS}$$

from which

$$a = \frac{A_1}{S} \cdot \frac{t_r - t_{r+m}}{t_{r+m}} \qquad (2)$$

As an example, assume a test room in which the normal reverberation time $t_r$ is 15 seconds, and the absorbing power $A = 50$ square foot units; that is, the room absorbs as much sound per reflection as 50 square feet of open window. No test room with characteristics more favorable to the method has ever been available as far as is known. In order to measure in such a room to an accuracy of 1 per cent the surface absorptivity of a material which absorbs about 3 per cent of the incident sound (the usual order of magnitude for ordinary plasters) it is necessary to introduce over 800 square feet of material into the room. The large area of material required for making accurate measurements is a practical disadvantage of the reverberation time method of measuring absorption.

3. An alternative procedure is to measure the reverberation times of the normal room with two sources of different emitting powers. If

$E_1$ = the rate at which the first source emits,
$E_2$ = the rate at which the second source emits,

$t_1$ = the reverberation time measured with the first source,
$t_2$ = the reverberation time measured with the second source,
$V$ = the volume of the room,
$C$ = the speed of sound at the prevailing temperature of the room.

Then, as shown by Buckingham,[2]

$$A_1 = \frac{4V}{C(t_1 - t_2)} \log \frac{E_1}{E_2} \tag{3}$$

A more direct method of measuring the acoustical surface absorptivities of materials was devised by H. O. Taylor.[3] If plane sound waves are incident normally on a perfectly reflecting plane wall the superposition of the incident and reflected waves results in a standing wave system in which the maxima and minima are, respectively, the sum and the difference of the amplitudes of the progressive waves. If $a$ is the amplitude of both the incident and reflected progressive waves (perfect reflection) the maximum amplitude in the standing wave system is $2a$ and the minimum zero. If the reflection is not perfect the reflected wave has a diminished amplitude and in the resulting wave interference pattern the maximum stationary amplitude is less than $2a$ and the minimum greater than zero. From measurements of the maximum and minimum stationary amplitudes in the interference pattern Taylor shows how the reflecting power $R$ of the wall may be computed. The absorbing power is then given by the relation $A = 1 - R$.

In practice, however, Taylor uses a tube or flue closed at one end by a plate of the material under investigation and at the other by a plate in which there are two holes, one serving to introduce the sound waves and the other to admit an exploring tube used in locating and measuring the maxima and minima in the resulting interference pattern. An air column so bounded has definite free periods and the question at once arises how these enter into the method. Two special cases can be handled experimentally. First the tube, closed at both ends as above, is adjusted to resonance for the sound frequency used. In this case the interference pattern receives appreciable contributions from waves which have suffered many reflections from *both* ends. The question then is how the reflecting power of the material at one end only may be derived from measurements made on the interference pattern. In the second special case an attempt is made to insure that practically the whole interference pattern is due to the direct and the once reflected wave. To accomplish this there must be practically no reflection at the input

[2] E. Buckingham, The Theory and Interpretation of Experiments on the Transmission of Sound through Partition Walls, B. S. Sci. Paper No. 506.

[3] H. O. Taylor, A direct method of finding the value of materials as sound absorbers, Phys. Rev. (2), **2**, p. 270; 1913.

end of the tube. This condition is extremely difficult to realize experimentally.

We shall consider in detail the case in which the tube is tuned to resonance. The wave train after reflection by the absorbing material may, in general, suffer both a reduction in amplitude and a change in phase. Since adjustment to resonance is assumed, this wave after reflection at the input end must agree in phase with the direct wave. After sound is first admitted to the tube the direct wave will, therefore, be augmented by the multiply reflected waves until the supply of energy from without is just offset by the energy dissipation within the tube.

If we take the origin at the end closed by the absorbing material under investigation and the postive $X$-axis directed into the tube and assume for the moment perfect reflection, we may write for the velocity potential of the progressive wave advancing toward the absorbing material;

$$\phi_1 = a \cos \frac{2\pi}{\lambda} (x+ct) \tag{4}$$

and for the reflected wave receding from the absorbing material:

$$\phi_2 = a \cos \frac{2\pi}{\lambda} (x-ct) \tag{5}$$

At the rigid barrier of the perfect reflector $x=o$ and the velocity $\frac{\partial \phi}{\partial x}=0$. This condition is satisfied for $\phi=\phi_1+\phi_2$ by the assumed forms (4) and (5).

The wave pressure is given by $p=-\rho_o \frac{\partial \phi}{\partial t}$, where $\rho_o$ is the density. Therefore:

$$p = C \sin \frac{2\pi}{\lambda} (x+ct) - C \sin \frac{2\pi}{\lambda} (x-ct) \tag{6}$$

where

$$\frac{C=2\pi ac}{\lambda} \rho_o$$

If only a fraction $r$ of the incident wave is reflected we have in lieu of (6)

$$p = C \sin \frac{2\pi}{\lambda} (x+ct) - Cr \sin \left[ \frac{2\pi}{\lambda} (x-ct) + \delta \right] \tag{6a}$$

where $\delta$ is the phase change which *a priori* must be assumed to accompany the reflection by the absorbing material. That such a phase change is possible and, therefore, requires consideration appears from the following analysis.

Reflection from a rigid obstacle occurs without change of phase.[4] But the reflecting material under investigation is not rigid, and may therefore vibrate as a membrane or plate. In so vibrating it radiates energy which is superposed upon the otherwise reflected energy. The phase relation of the driving force (incident sound wave) and the radiation is determined by the relation of the natural frequencies of the vibrating system to that of the driving force.[5] If the progressive wave moving away from the reflecting material contains an appreciable component of such radiated sound there will be an abrupt phase change at the reflecting surface, the existence of which is indicated by a shift of the minimum point nearest the reflecting surface. The absence of such a shift is sufficient evidence that there is no appreciable radiation.

We shall therefore neglect $\delta$ in equation (6a), experience showing that the experimentally determined position of pressure maxima and minima provides the justification. In the tube the pressure has a maximum or minimum value everywhere at the same time. This is true because in every half wave of a stationary wave system the motion is everywhere in the same phase.[6] The times at which the pressure has critical values are found from $\frac{\partial \phi}{\partial t}=0$. We shall abbreviate

$$\frac{2\pi x}{\lambda}=\alpha \text{ and } \frac{2\pi ct}{\lambda}=\beta$$

Then

$$p=C\sin(\alpha+\beta)-C\,r\sin(\alpha-\beta) \tag{6b}$$

$$\frac{\partial p}{\partial t}=C\frac{2\pi c}{\lambda}[\cos(\alpha+\beta)+r\cos(\alpha-\beta)]=0 \tag{7}$$

The solution of (7) is

$$\tan\alpha\tan\beta=\frac{1+r}{1-r} \tag{8}$$

Substitution of (8) in (6b) gives (if $p_t$ denote the maximum pressure with respect to the time)

$$p_t=C[(1-r)^2\sin^2\alpha+(1+r)^2\cos^2\alpha]^{1/2} \tag{9}$$

The points where there are critical values of this time maximum are given by

$$\frac{\partial p_t}{\partial x}=0$$

[4] Rayleigh, Sound; 2, secs. 270 to 271 and 351.

[5] Weisbach, F., Versuche ueber Schalldurchlaessigkeit, Schallreflexion und Schallabsorption; Leipzig dissertation, pp. 58–65; 1910.

[6] It must be remembered, however, that the interference pattern with which we are dealing does not satisfy all the conditions of a stationary wave system; for example, at the reflector the condition $\frac{\partial \phi}{\partial x}=0$ is not satisfied.

Now

$$\frac{\partial p_t}{\partial x}=C\frac{2\pi}{\lambda}[(1-r)^2\sin^2\alpha+(1+r)^2\cos^2\alpha]^{1/2}-2\sin\alpha\cos\alpha\,[(1-r)^2-(1+r)^2]=0$$

that is, where $\sin 2\alpha=0$, or $\alpha=\frac{n\pi}{\lambda}$; that is, $n=0, 1, 2 \cdots\cdots$

$$\left.\begin{array}{lll} \text{At } \alpha=0 & x=0 & p_{\max}=M_1=A(1+r) \\ = & x= & p_{\min}=N_1=A(1-r) \\ = & x= & p_{\max}=M_2=A(1+r) \\ = & x= & p_{\min}=N_2=A(1-r) \end{array}\right\} \tag{10}$$

Consequently

$$\frac{M_1}{N_1}=\frac{M_2}{N_2}=\frac{1+r}{1-r}$$

and

$$r=\frac{M_1-N_1}{M_1+N_1} \tag{11}$$

But $r$ is the reflecting power or reflectivity for amplitude.
If $R$ be the reflecting power for intensity

$$R=r^2=\left[\frac{M_1-N_1}{M_1+N_1}\right]^2$$

The absorptivity or absorbing power is given by

$$A=1-R=\frac{4M_1N_1}{(M_1+N_1)^2} \tag{12}$$

The experimental situation departs from the theory presented in one important respect. In order to get a tube to resonate satisfactorily its diameter must be relatively small and it must not be too many wave lengths long. It must be smaller in cross section and length the higher the pitch used. But even smooth metal tubing absorbs appreciably and a progressive wave suffers a diminution in amplitude which is proportional to the length of tube traversed by it. The result is that the maxima $M_1$, $M_2$, $M_3$ . . . and the minima $N_1$, $N_2$, $N_3$ . . . are not uniform as demanded by equation (10), but show a progressive change away from the reflecting surface.

The change in amplitude of the progressive wave due to tube absorption may be taken into account by multiplying the amplitude by an exponential damping factor. Remembering that the wave approaching the reflector increases in amplitude with $x$, and that the wave leaving the reflector decreases in amplitude as $x$ increases, the modified form of equation (6a) will be

$$p = C\epsilon^{\gamma x} \sin \frac{2\pi}{\lambda}(x+ct) - Cr\epsilon^{-\gamma x} \sin \frac{2\pi}{\lambda}(x-ct) \quad . \; . \; . \tag{13}$$

Experiment shows that the tube absorption does not shift appreciably the position of the maxima and minima, and we may therefore simply compute the maximum values of the pressure with respect to time at $x=0$, $\frac{\lambda}{4}$, $\frac{\lambda}{2}$, etc.

At

$$x=0 \qquad M_1 = C(1+r) \tag{14a}$$

$$x=\frac{\lambda}{4} \qquad N_1 = C\epsilon^{\frac{\gamma\lambda}{4}}\left(1-r\epsilon^{\frac{-\gamma\lambda}{2}}\right) \tag{14b}$$

$$x=\frac{\lambda}{2} \qquad M_2 = C\epsilon^{\frac{\gamma\lambda}{2}}\left(1+r\epsilon^{-\gamma\lambda}\right) \tag{14c}$$

$$x=\frac{3\lambda}{4} \qquad N_2 = C\epsilon^{\frac{3\gamma\lambda}{4}}\left(1-r\epsilon^{\frac{-3\gamma\lambda}{2}}\right) \tag{14d}$$

The exact solutions of the equations (14) for $r$ and $\gamma$ does not seem practicable, but the following approximate solution appears to be adequate for practical purposes. Expanding $\epsilon^{\frac{\gamma\lambda}{4}}$ and other terms similarly, neglecting powers of $\gamma\lambda$ higher than the first, and abbreviating $\gamma\frac{\lambda}{4}=\mu$, equations (14) become

$$M_1 = C(1+r) \tag{15a}$$

$$N_1 = C(1-r) + \mu C(1+r) \tag{15b}$$

$$M_2 = C(1+r) + 2\mu C(1-r) \tag{15c}$$

$$N_2 = C(1-r) + 3\mu C(1+r) \tag{15d}$$

From any three of these equations we are to eliminate $C$ and solve for $r$. In general, we obtain a quadratic for $r$, but by using (15a) with another pair, such as (15b) and (15d) we can obtain a first-degree expression. From (15b) and (15d)

$$N_2 - N_1 = 2\mu C(1+r) \tag{16}$$

Substituting the value of $\mu C(1+r)$ from (16) in (15b)

$$N_1 = C(1-r) + \frac{N_2 - N_1}{2} \tag{17}$$

or

$$C(1-r) = N_1 - \frac{N_2 - N_1}{2} \tag{17a}$$

which combined with (15a) gives

$$\frac{1-r}{1+r}=\frac{N_1-\frac{N_2-N_1}{2}}{M_1} \tag{18}$$

from which

$$r=\frac{M_1-N_1+\frac{N_2-N_1}{2}}{M_1+N_1-\frac{N_2-N_1}{2}} \tag{19}$$

But $R=r^2$ and $A=1-R_1$, therefore

$$A=1-\left[\frac{M_1-N_1+\frac{N_2-N_1}{2}}{M_1+N_1-\frac{N_2-N_1}{2}}\right] \tag{19a}$$

In obtaining $A$ by subtracting $R$ from 1 it is tacitly assumed that the transmission is zero, for strictly speaking it is the sum of the three, transmission, absorption, and reflection, which makes 100 per cent. Experiment shows that for most types of building panels and doors measured the transmission is less than 0.1 per cent, and consequently negligible in this case. For other materials, especially hair felt, it is not safe to neglect the transmission. In such cases the sample under test was backed by wood or plaster of Paris to reduce the transmission to a negligible amount.

Formulas of a similar nature can be derived containing $M$ with higher values of $N$, and the use of such formulas is occasionally advisable. The successive values of $N$ (under usual conditions) increase materially as we pass to higher subscripts, and in some cases the experimental results with the larger values are more concordant. With low frequencies and long wave lengths it is impracticable to use a pipe long enough to go beyond $N_4$. The successive values of $M$, on the contrary, differ but little from $M_1$, hence no reason arises for the use of a formula not derived from equation (15a) as a basis. In fact, unless this equation is used, the elimination gives a complicated quadratic form for $r$.

In the foregoing discussion nothing has been said about the second reflection of the waves from the input end of the tube. The effect of such a second reflection will be the equivalent of introducing a second wave, of less amplitude than the first, which will traverse the tube down and back, in its turn, subject to the same law of absorption and decrease of amplitude. Equation (13) will have added to its right-hand side an exactly similar expression, but with a smaller value of the initial amplitude $C$; and for every subsequent reflection

another such expression, containing a $C$ of smaller value, will be added. This new coefficient $\Sigma C$ will be eliminated as before, and no change in the final value of $r$ will result. Thus the value of $r$ as determined by the foregoing analysis turns out to be independent of the reflecting or absorbing character of the input end of the tube.

## II. DETAILS OF THE METHOD

The method used at the Bureau of Standards in the study of surface absorption is essentially that of Taylor. The advantage of this method is that satisfactory results can be obtained on samples of small area, in most cases less than a square foot.

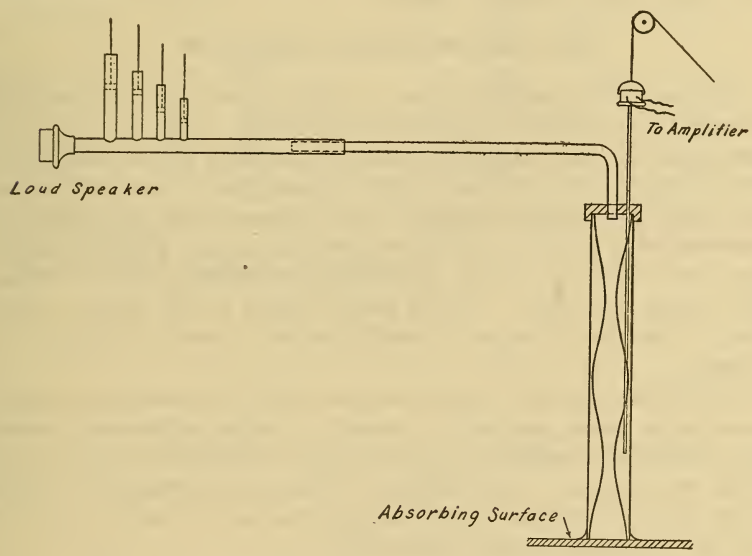


Fig. 9.—*Arrangement of apparatus for absorption measurements*

The arrangement of the apparatus is shown in Figure 9. The sample is secured by means of plaster of Paris or soft wax to one end of a brass pipe which is set up in a vertical position with the sample at its lower end. The upper end is closed by a plug with two holes, through one of which passes a tube conveying the sound from the source (a loud speaker) while through the other passes a long exploring tube with a telephone receiver at its upper end. By raising and lowering this tube the different maxima and minima within the brass pipe may be located. The current from the telephone receiver is led to the same apparatus as used in transmission measurements, by which the relative intensities of the different maxima and minima within the brass pipe are evaluated.

Since the length of the brass pipe must be adjusted to resonance, different lengths must be used for the different frequencies. Different diameters of pipe were also used for the same frequency, and it was found that with pipes of larger diameter there was less travel absorption and less diminution in amplitude. In consequence, the values of $N$ approached equality more closely than when smaller pipes were employed.

To secure sharp maxima and minima it is important that the tone introduced into the resonating pipe shall be pure. This is secured in practice, as Taylor describes, by the use of Quincke's modification of Herschel's interference tubes.[7] A set of four such tubes is shown in the figure near the loud speaker.

## III. EXPERIMENTAL RESULTS

The absorption coefficients for a variety of substances have been measured at a number of different frequencies. This is a feature of such work to which no great attention has been given in the past. For the most part the tables of such values given [8] were determined at a single frequency, although both authors cited measured the transmission of hair felt at different frequencies, and Paul E. Sabine [9] gives such values for brick, painted and unpainted, and for wood-fiber plaster on brick. As the results given in the present paper show, a material change in absorption may result at higher frequencies.

Table 3 lists several of the panels upon which transmission measurements were made, and also a variety of other substances, giving their absorption coefficients at frequencies ranging from 297 to 3,210 cycles per second. The coefficients tabulated represent the actual fraction of the incident sound energy absorbed by the sample and have no reference to open-window units.

The coefficients of absorption of the plaster panels tested, while differing considerably among themselves, are all so small as to be of no practical importance. For this reason a more extended set of measurements on plaster panels was not made.

---

[7] Rayleigh, Theory of Sound, 2, sec. 318, p. 210.

[8] Sabine, Collected papers on acoustics. Harvard University Press, 1922. Watson, Acoustics of Buildings; John Wiley & Sons, 1923.

[9] P. E. Sabine, American Architect, July 30, 1919.

TABLE 3

| Material | Frequencies | | | | | | | | | |
|---|---|---|---|---|---|---|---|---|---|---|
| | 297 | 569 | 968 | 1,038 | 1,095 | 2,190 | 2,485 | 2,640 | 2,890 | 3,210 |
| Panel No. 3 | 0.032 | | | 0.033 | 0.032 | 0.030 | 0.023 | | | 0.017 |
| Panel No. 4 | .016 | | | .015 | | .011 | | | 0.007 | |
| Panel No. 5 | .012 | | | | .012 | .006 | | 0.007 | | |
| Panel No. 6 | .015 | | | | .002 | .005 | | | .003 | |
| Panel No. 13 | .014 | 0.009 | 0.000 | | .000 | .009 | | | .001 | |
| Panel No. 14 | .016 | | | | .000 | .013 | | | .004 | |
| Glass | .021 | | | | .020 | .010 | | | | |
| ⅝-inch Celotex | .058 | | | | .056 | .072 | | | .097 | |
| Celotex B | .178 | | | | .399 | .734 | | | .708 | |
| Sound absorbing: | | | | | | | | | | |
| Tile No. 1 | .079 | | | | .116 | .401 | | | .35 | |
| Tile No. 2 | .078 | | | | .127 | .201 | | | .213 | |
| Hair felt, 1-inch | .33 | | | | .62 | [1].94 | | | [1].90 | |
| Brick | .019 | .019 | | | .019 | .056 | | | .021 | |
| Pine wood | .012 | .009 | | | .016 | .016 | | | .009 | |
| Oak wood | .011 | .007 | | | .011 | .006 | | | .005 | |
| Akoustolith | | .301 | | | .434 | .380 | | | .272 | |
| Brass | .021 | .015 | | | .023 | .004 | | | .001 | |
| ½-inch insulite | .056 | .102 | | | .182 | .256 | | | .172 | |
| ½-inch flaxlinum | | .229 | | | .312 | .503 | | | .336 | |
| 1-inch flaxlinum | .182 | .422 | | | .456 | .569 | | | .407 | |

[1] The absorption at 2,190 and 2,890 cycles was measured upon a different piece of material from that used at 297 and at 1,095 cycles.

WASHINGTON, November 9, 1925.